DC-DC Converters

VI-200
VE-200

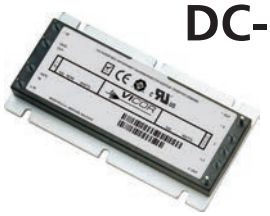

50 to 200 Watts

Features & Benefits

- Isolated output
- Up to 50W/in^3
- cURus, cTÜVus
- Up to 90% efficiency
- Size: 4.6" x 2.4" x 0.5" (116,8 x 61,0 x 12,7mm)
- Remote sense and current limit
- OVP, thermal shutdown
- Logic disable
- Wide range output adjust
- Compatible power booster modules
- ZCS power architecture
- Low noise FM control
- CE Marked
- RoHS compliant (VE-200)

Product Highlights

The VI-200 family, with over 14 million units shipped, is Vicor's broad series of "zero-current-switching" component-level DC-DC converters.

Operating at frequencies up to 2MHz, VI-200 family converters offer exceptional power density, efficiency, noise performance, reliability and ease of use. Booster modules (VI-Bxx) provide a simple, cost-effective, off-the-shelf solution for higher power output requirements. One or more boosters may be used to create synchronous arrays capable of supplying several kilowatts of output power.

The flexibility of Vicor's power components is also available in half-size, half-power VI-J00 MiniMods.

Part Numbering

VI – 2 6 1 – C W

Family
VI = Non-RoHS
VE = RoHS

Series
2 = 200
B = Booster

Input

0 = 12V	**N** = 48V
V = 24V	**4** = 72V
1 = 24V	**T** = 110V
W = 24V	**5** = 150V
2 = 36V	**6** = 300 V
3 = 48V	**7** = 150/300V

Output

Z = 2V	**M** = 10V	**K** = 40V
Y = 3.3V	**1** = 12V	**4** = 48V
0 = 5V	**P** = 13.8V	**H** = 52V
X = 5.2V	**2** = 15V	**F** = 72V
W = 5.5V	**N** = 18.5V	**D** = 85V
V = 5.8V	**3** = 24V	**B** = 95V
T = 6.5V	**L** = 28V	
R = 7.5V	**J** = 36V	

Grade
E = –10 to 85°C
C = –25 to 85°C
I = –40 to 85°C
M = –55 to 85°C

Power

≥ 5V	< 5V
U = 200W	**U** = 40A
V = 150W	**V** = 30A
W = 100W	**W** = 20A
X = 75W	**X** = 15A
Y = 50W	**Y** = 10A

Note: For additional packaging options, please see page 5.

Maximum Power Available for VI-2xx-xx [a]

Input				Output																						
Voltage Nom. (Range)	Low Line 75% Max Power	Transient [b]	V_{IN} Designators	V_{OUT} Designators																						
				2	3.3	5	5.2	5.5	5.8	6.5	7.5	10	12	13.8	15	18.5	24	28	36	40	48	52	72	85	95
				Z	Y	0	X	W	V	T	R	M	1	P	2	N	3	L	J	K	4	H	F	D	B
12 (10 – 20)	n/a	22	**0**	X	X	X	X	X	X	X	X	X	X	X	X	X	X	X	X	X	X	X	X	X	X
24 (10 – 36)	n/a	n/a	**V**	--	X	Y	Y	Y	Y	Y	X	X	X	X	X	X	X	X	X	X	X	--	--	--	--
24 (21 – 32)	18	36	**1**	U	U	U	U	U	U	V	V	U	U	U	U	U	U	U	U	U	U	U	U	U	U
24 (18 – 36)	n/a	n/a	**W**	V	V	V	V	V	V	W	W	V	V	V	V	V	V	V	V	V	V	V	V	V	V
36 (21 – 56)	18	60	**2**	W	V	W	W	W	W	W	W	W	W	W	W	W	W	W	W	W	W	W	--	--	--
48 (42 – 60)	36	72	**3**	U	U	U	U	U	U	U	U	U	U	U	U	U	U	U	U	U	U	U	U	U	U
48 (36 – 76)	n/a	n/a	**N**	U	U	U	U	U	U	U	U	U	U	U	U	U	U	U	U	U	U	U	U	U	U
72 (55 – 100)	45	110	**4**	v	U	U	U	U	U	V	V	U	U	U	U	U	U	U	U	U	U	U	U	U	U
110 (66 – 160)	n/a	n/a	**T**	V	V	V	V	V	V	W	W	V	V	V	V	V	V	V	V	V	V	V	V	--	--
150 (100 – 200)	85 [c]	215	**5**	U	U	V	V	V	V	V	V	U	U	U	U	U	U	U	U	U	U	U	U	U	U
150 (100 – 375)	n/a	n/a	**7**	W	W	Y	Y	Y	Y	W	W	W	W	W	W	W	W	W	W	W	W	W	--	--	--
300 (200 – 400)	170 [d]	425	**6**	U	U	U	U	U	U	V	V	U	U	U	U	U	U	U	U	U	U	U	U	U	U

[a] For additional output power, "booster" modules are available. (VI-Bxx-xx).
[b] Transient voltage for 1 second.
[c] $12V_{OUT}$, $13.8V_{OUT}$, $15V_{OUT}$, 200W models are limited to $90V_{DC}$.
[d] $15V_{OUT}$, 200W models are limited to $185V_{DC}$.

Converter Specifications

(Typical at T_{BP} = 25°C, nominal line and 75% load, unless otherwise specified.)

Input Specifications

Parameter	VI-200 E-Grade			VI-200 C-, I-, M-Grade			Units	Test Conditions
	Min	Typ	Max	Min	Typ	Max		
Inrush charge		120×10^{-6}			120×10^{-6}	200×10^{-6}	Coulombs	Nominal line
Input reflected ripple current – pp		10%			10%		I_{IN}	Nominal line, full load
Input ripple rejection		$25+20 \text{ Log } \left(\frac{V_{IN}}{V_{OUT}}\right)$			$30+20 \text{ Log } \left(\frac{V_{IN}}{V_{OUT}}\right)$		dB	120Hz, nominal line
					$20+20 \text{ Log } \left(\frac{V_{IN}}{V_{OUT}}\right)$		dB	2400Hz, nominal line
No load power dissipation		1.35	2		1.35	2	Watts	

Converter Specifications (Cont.)

(Typical at T_{BP} = 25°C, nominal line and 75% load, unless otherwise specified.)

Output Characteristics

Parameter	VI-200 E-Grade			VI-200 C-, I-, M-Grade			Units	Test Conditions
	Min	Typ	Max	Min	Typ	Max		
Setpoint accuracy		1%	2%		0.5%	1%	V_{NOM}	
Load/line regulation			0.5%		0.05%	0.2%	V_{NOM}	LL to HL, 10% to Full Load
Load/line regulation			1%		0.2%	0.5%	V_{NOM}	LL to HL, No Load to 10%
Output temperature drift		0.02			0.01	0.02	% / °C	Over rated temp.
Long term drift		0.02			0.02		%/1K hours	
Output ripple – pp: 2V, 3.3V			150		60	100	mV	20MHz bandwidth
5V			5%		2%	3%	V_{NOM}	20MHz bandwidth
10 – 95V			3%		0.75%	1.5%	V_{NOM}	20MHz bandwidth
Trim range [a]	50%		110%	50%		110%	V_{NOM}	
Total remote sense compensation	0.5			0.5			Volts	0.25V max. neg. leg
OVP set point		125% [b]		115%	125% [b]	135%	V_{NOM}	Recycle power
Current limit	105%		135%	105%		125%	$I_{FULL\ LOAD}$	Automatic restart
Short circuit current [c]	20%		140%	20%		130%	$I_{FULL\ LOAD}$	Automatic restart

[a] 10V to 15V outputs, or "V" input range have standard trim range ±10%. Consult factory for wider trim range. 3.3V output trim range 2.20 to 3.63V, 95V output –50 + 0% trim range.
[b] 131% nominal for booster modules.
[c] Output voltages of 3.3V or 5V incorporate foldback current limiting; For output voltages from 5.2V to 7.5V consult factory; All other outputs provide constant current limiting.

Note: The permissible load current must never be exceeded during normal, abnormal or test conditions. For additional output related application information, please refer to output connections on page 5.

Control Pin Specifications

Parameter	VI-200 E-Grade			VI-200 C-, I-, M-Grade			Units	Test Conditions
	Min	Typ	Max	Min	Typ	Max		
Gate out impedance		50			50		Ohms	
Gate in impedance		1000			1000		Ohms	
Gate in open circuit voltage		6			6		Volts	Use open collector
Gate in low threshold	0.65			0.65			Volts	
Gate in low current			6			6	mA	
Power sharing accuracy	0.95		1.05	0.95		1.05		

Converter Specifications (Cont.)

(Typical at T_{BP} = 25°C, nominal line and 75% load, unless otherwise specified.)

Dielectric Withstand Characteristics

Parameter	VI-200 E-Grade			VI-200 C-, I-, M-Grade			Units	Test Conditions
	Min	Typ	Max	Min	Typ	Max		
Input to output	3,000			3,000			V_{RMS}	Baseplate earthed
Output to baseplate	500			500			V_{RMS}	
Input to baseplate	1,500			1,500			V_{RMS}	

Thermal Characteristics

Parameter	VI-200 E-Grade			VI-200 C-, I-, M-Grade			Units	Test Conditions
	Min	Typ	Max	Min	Typ	Max		
Efficiency		78 – 88%			80 – 90%			
Baseplate to sink thermal impedance		0.07			0.07		°C/Watt	With Vicor P/N 20266
Thermal shutdown [d] (Drivers only)	90	95	105	90	95	105	°C	Cool and recycle power to restart

[d] No overtemp protection in booster modules.

Mechanical Specifications

Parameter	VI-200 E-Grade			VI-200 C-, I-, M-Grade			Units	Test Conditions
	Min	Typ	Max	Min	Typ	Max		
Weight	5.7 (160.2)	6.3 (178)	6.9 (195.8)	6.6 (187.2)	7.3 (208)	8.1 (228.8)	Ounces (Grams)	

Product Grade Temperatures

Parameter	Storage	Operating	Units	Notes
E	-20 to +100	-10 to + 85	°C	Overtemperature shutdown 95°C typical (recycle power to restart)
C	-40 to +100	-25 to + 85	°C	
I	-55 to +100	-40 to + 85	°C	
M	-65 to +100	-55 to + 85	°C	

Maximum Capacitance, Rated Output Voltage <5V

Rated V_{OUT} (V)	I_{OUT} Rating (A)	C_{MAX} (µF)	I_{OUT} Rating (A)	C_{MAX} (µF)
2 to <3	≤10	1500	>10 to 40	5000
3 to <5	≤10	1000	>10 to 40	5000

Maximum Capacitance, Rated Output Voltage ≥5V

Rated V_{OUT} (V)	P_{OUT} Rating (W)	C_{MAX} (µF)	P_{OUT} Rating (W)	C_{MAX} (µF)
5 to <7.5	≤50	1000	>50 to 200	1500
7.5 to <10	≤50	400	>50 to 200	700
10 to <28	≤50	400	>50 to 200	500
>28	≤50	150	>50 to 200	250

Basic Module Operation

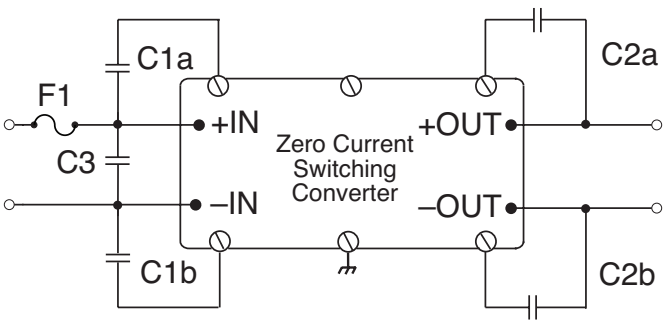

$$C3\ (\mu F) = \frac{400}{V_{IN}\ Minimum}$$

Figure 1 — *Basic module operation requires fusing, grounding, bypassing capacitors.* See Design Guide & Applications Manual.*

Output Connections and Considerations

The permissible load current[e] must never be exceeded during normal, abnormal or test conditions. Converters subject to dynamic loading exceeding 25% of rated current must be reviewed by Vicor Applications Engineering to ensure that the converter will operate properly.

Under dynamic load, light load, or no load conditions, the converter may emit audible noise. Converters that utilize remote sense may require compensation circuitry to offset the phase lag caused by the external output leads and load impedance. Remote Sense leads must be protected for conditions such as lead reversal, noise pickup, open circuit, or excessive output lead resistance between the sense point and the converters output terminals. For applications that may draw more than the rated current, a fast acting electronic circuit breaker must be utilized to protect the converter. Under no circumstance should the rated current be exceeded. Utilizing or testing of current limit or short circuit current will damage the converter. Ensure that the total output capacitance connected to the converter does not exceed the limits on Page 4.

[e] Permissible load current: $\frac{Nominal\ Power\ Rating}{Nominal\ V_{OUT}}$

Storage

Vicor products, when not installed in customer units, should be stored in ESD safe packaging in accordance with ANSI/ESD S20.20, "Protection of Electrical and Electronic Parts, Assemblies and Equipment" and should be maintained in a temperature controlled factory/warehouse environment not exposed to outside elements controlled between the temperature ranges of 15°C and 38°C. Humidity shall not be condensing, no minimum humidity when stored in an ESD compliant package.

Mechanical Drawing

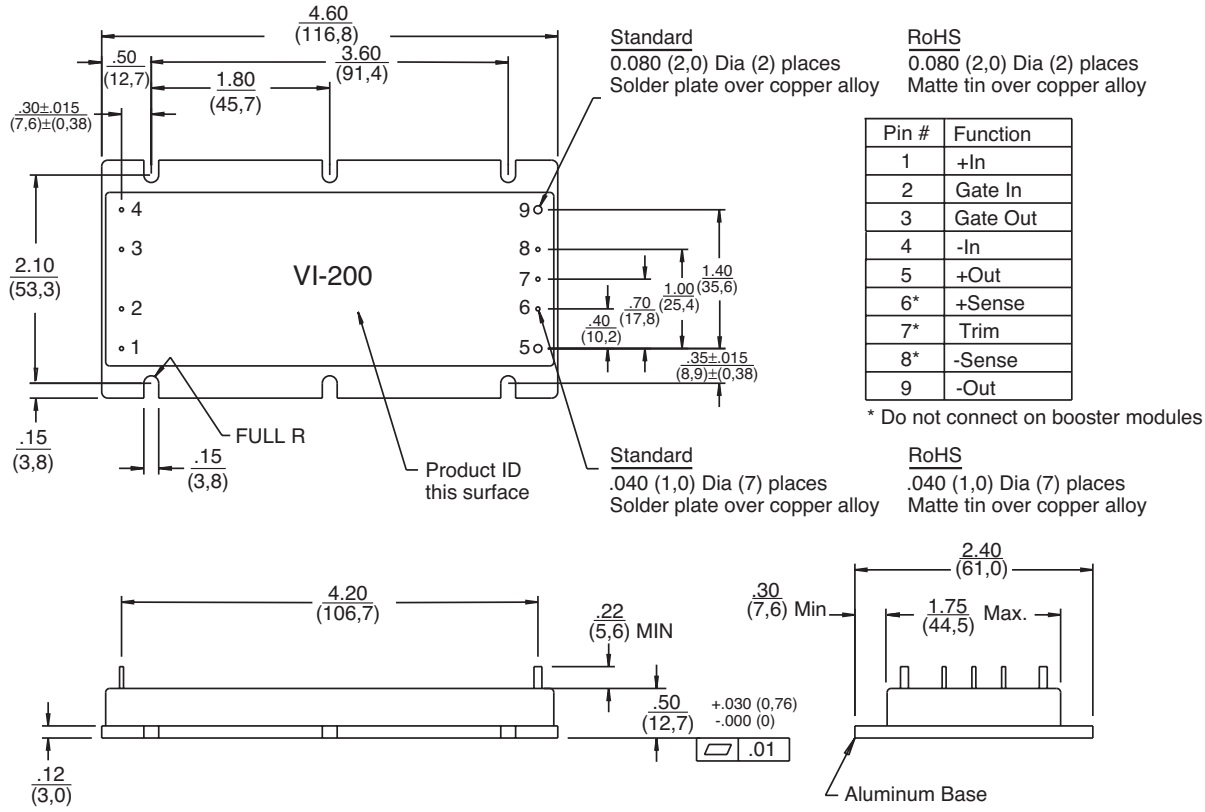

Pin #	Function
1	+In
2	Gate In
3	Gate Out
4	-In
5	+Out
6*	+Sense
7*	Trim
8*	-Sense
9	-Out

* Do not connect on booster modules

Packaging Options

SlimMod

Flangeless package



4.60"L x 1.80"W x 0.50"H
(116,8 x 45,7 x 12,7mm)

To order the SlimMod configuration add the suffix "–S" to the standard module part number.

Qty (2) grounding clips are included with each SlimMod P/N 32187

FinMod

Flangeless package with integral heat sink

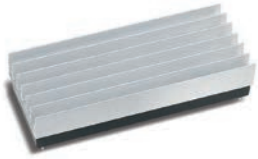

Longitudinal, 0.25"(6.35mm) fins — add suffix "–F1"
Longitudinal, 0.50"(12.7mm) fins — add suffix "–F2"



Transverse, 0.25"(6.35mm) fins — add suffix "–F3"
Transverse, 0.50"(12.7mm) fins — add suffix "–F4"

Available with longitudinal or transverse fins of 0.25"(6.35 mm) or 0.50"(12.7mm) height. Add the appropriate suffx to the module part number.

Qty (4) grounding clips are included with each FinMod
F1, F2 P/N 32185
F3, F4 P/N 32186

MegaMod

Chassis mount alternatives, one, two, or three outputs: up to 600W



1 up – 4.9" x 2.5" x 0.62" (124,4 x 63,5 x 15,7mm)
2 up – 4.9" x 4.9" x 0.62" (124,4 x 124,4 x 15,7mm)
3 up – 4.9" x 7.3" x 0.62" (124,4 x 185,4 x 15,7mm)

BusMod



4.60"L x 2.40"W x 1.08"H
(116,8 x 61,0 x 27,4mm)

To order the BusMod fully assembled, add suffix "–B1" to the standard module part number.

To order the BusMod separately:
Full-sized BusMod — P/N 06322

See BusMod Mechanical Drawings for more details.

Vicor's comprehensive line of power solutions includes high density AC-DC and DC-DC modules and accessory components, fully configurable AC-DC and DC-DC power supplies, and complete custom power systems.

Information furnished by Vicor is believed to be accurate and reliable. However, no responsibility is assumed by Vicor for its use. Vicor makes no representations or warranties with respect to the accuracy or completeness of the contents of this publication. Vicor reserves the right to make changes to any products, specifications, and product descriptions at any time without notice. Information published by Vicor has been checked and is believed to be accurate at the time it was printed; however, Vicor assumes no responsibility for inaccuracies. Testing and other quality controls are used to the extent Vicor deems necessary to support Vicor's product warranty. Except where mandated by government requirements, testing of all parameters of each product is not necessarily performed.

Specifications are subject to change without notice.

Visit http://www.vicorpower.com/vi-200_vi-j00 for the latest product information.

Vicor's Standard Terms and Conditions and Product Warranty

All sales are subject to Vicor's Standard Terms and Conditions of Sale, and Product Warranty which are available on Vicor's webpage (http://www.vicorpower.com/termsconditionswarranty) or upon request.

Life Support Policy

VICOR'S PRODUCTS ARE NOT AUTHORIZED FOR USE AS CRITICAL COMPONENTS IN LIFE SUPPORT DEVICES OR SYSTEMS WITHOUT THE EXPRESS PRIOR WRITTEN APPROVAL OF THE CHIEF EXECUTIVE OFFICER AND GENERAL COUNSEL OF VICOR CORPORATION. As used herein, life support devices or systems are devices which (a) are intended for surgical implant into the body, or (b) support or sustain life and whose failure to perform when properly used in accordance with instructions for use provided in the labeling can be reasonably expected to result in a significant injury to the user. A critical component is any component in a life support device or system whose failure to perform can be reasonably expected to cause the failure of the life support device or system or to affect its safety or effectiveness. Per Vicor Terms and Conditions of Sale, the user of Vicor products and components in life support applications assumes all risks of such use and indemnifies Vicor against all liability and damages.

Intellectual Property Notice

Vicor and its subsidiaries own Intellectual Property (including issued U.S. and Foreign Patents and pending patent applications) relating to the products described in this data sheet. No license, whether express, implied, or arising by estoppel or otherwise, to any intellectual property rights is granted by this document. Interested parties should contact Vicor's Intellectual Property Department.

Contact Us: http://www.vicorpower.com/contact-us

Vicor Corporation
25 Frontage Road
Andover, MA, USA 01810
Tel: 800-735-6200
Fax: 978-475-6715
www.vicorpower.com

email
Customer Service: custserv@vicorpower.com
Technical Support: apps@vicorpower.com

©2017 Vicor Corporation. All rights reserved. The Vicor name is a registered trademark of Vicor Corporation.
All other trademarks, product names, logos and brands are property of their respective owners.

ENTEGRECİ

Bu belge www.entegreci.com üzerinden sunulmaktadır.

Elektronik komponent tedarikinde Entegreci

Entegreci, Eskişehir merkezli, Türkiye geneline satış yapan bir elektronik komponent mağazasıdır. Entegreler (IC), mikrodenetleyiciler, transistörler, diyotlar, pasif elemanlar, konnektörler, modüller ve geliştirme kartları tek adetten seri üretim adetlerine kadar satılır. Ürün sayfalarında güncel stok durumunu, fiyatı ve datasheet bağlantısını bulabilirsiniz.

Parça koduyla arama

Üretici parça numarasını yazın; stok ve fiyatı hemen görün.

www.entegreci.com

Ürün kategorileri

Entegreden kapasitöre tüm elektronik komponent kategorileri.

Kategorilere göz atın

Üreticiler

Aradığınız üreticinin ürünlerini tek sayfada inceleyin.

Üreticileri görün

Toplu alım ve teklif

Listede olmayan ya da yüksek adetli parçalar için teklif isteyin.

Teklif isteyin

www.entegreci.com | **destek@entegreci.com** | **0850 305 90 34**

Entegreci is an online electronic components store based in Türkiye. Search by manufacturer part number to see stock, prices and datasheets for integrated circuits, microcontrollers, transistors, passive components and connectors, or request a quote for parts that are not listed.

Bu sayfa Entegreci tarafından eklenmiştir. Belgenin önceki sayfaları asıl yayıncısına aittir ve içeriği değiştirilmemiştir; en güncel sürüm için belgenin yayıncısına başvurun.