HD6303Y, HD63A03Y, HD63B03Y, HD63C03Y CMOS MPU (Micro Processing Unit)

The HD6303Y is a CMOS 8-bit single-chip microprocessing unit which contains a CPU compatible with the CMOS 8-bit microcomputer HD6301V, 256 bytes of RAM, 24 parallel I/O pins, Serial Communication Interface (SCI) and two timers.

■ FEATURES

- Instruction Set Compatible with the HD6301V1
- 256 Bytes of RAM
- 24 Parallel I/O Pins
- Parallel Handshake Interface (Port 6)
- Darlington Transistor Drive (Port 2, 6)
- 16-Bit Programmable Timer
  - Input Capture Register × 1
  - Free Running Counter × 1
  - Output Compare Register × 2
- 8-Bit Reloadable Timer
  - External Event Counter
  - Square Wave Generation
- Serial Communication Interface (SCI)
  - Asynchronous Mode (8 Transmit Formats, Hardware Parity)
  - Clocked Synchronous Mode
- Memory Ready
  - 3 Kinds of Memory Ready
- Halt
- Error Detection
  (Address Error, Op-code Error)
- Interrupt — External 3, Internal 7
- Maximum 65k Bytes Address Space
- Low Power Dissipation Mode
  - Sleep Mode
  - Standby Mode (Hardware Standby, Software Standby)
- Minimum Instruction Execution Time — 0.5μs (f = 2MHz)
- Wide Range of Operation
  - V_{CC} = 3 to 5.5V (f = 0.1 to 0.5MHz)
  - V_{CC} = 5V ± 10%
    - f = 0.1 to 1.0MHz : HD6303Y
    - f = 0.1 to 1.5MHz : HD63A03Y
    - f = 0.1 to 2.0MHz : HD63B03Y
    - f = 0.1 to 3.0MHz ; HD63C03Y

■ PROGRAM DEVELOPMENT SUPPORT TOOLS

- Cross assembler and C compiler software for IBM PCs and compatibles
- In circuit emulator for use with IBM PCs and compatibles

HD6303YP, HD63A03YP,
HD63B03YP, HD63C03YP

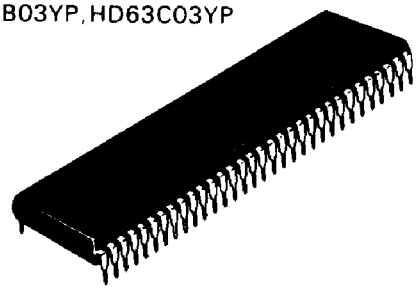

(DP-64S)

HD6303YF, HD63A03YF,
HD63B03YF, HD63C03YF

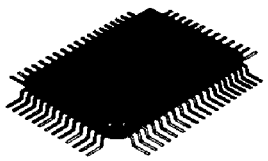

(FP-64)

HD6303YH, HD63A03YH
HD63B03YH, HD63C03YH

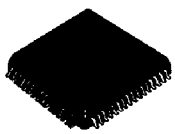

(FP-64A)

HD6303YCP, HD63A03YCP
HD63B03YCP, HD63C03YCP

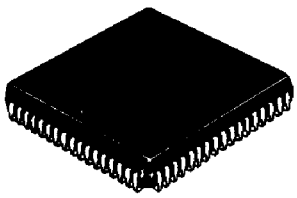

(CP-68)

www.chipdocs.com Be sure to visit ChipDocs web site for more information.

■ PIN ARRANGEMENT

● HD6303YP, HD63A03YP, HD63B03YP, HD63C03YP

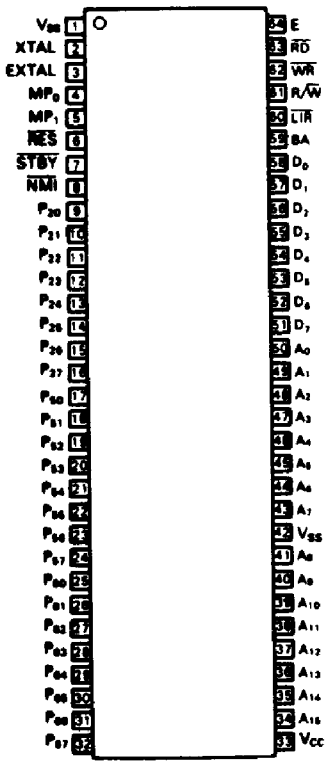

(Top View)

● HD6303YF, HD63A03YF, HD63B03YF, HD63C03YF

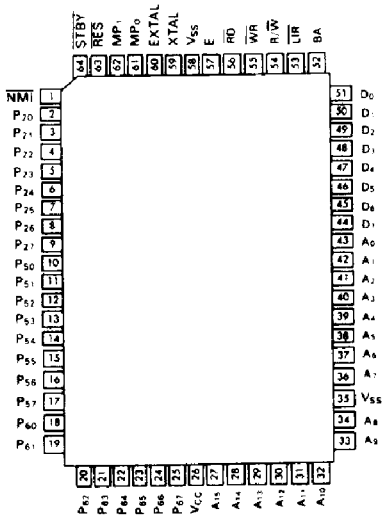

(Top View)

● HD6303YCP, HD63A03YCP, HD63B03YCP, HD63C03YCP

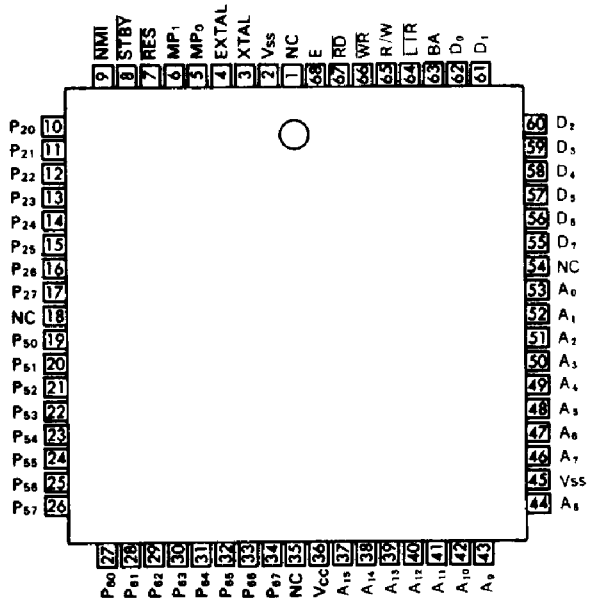

(Top View)

● HD6303YH, HD63A03YH, HD63B03YH, HD63C03YH

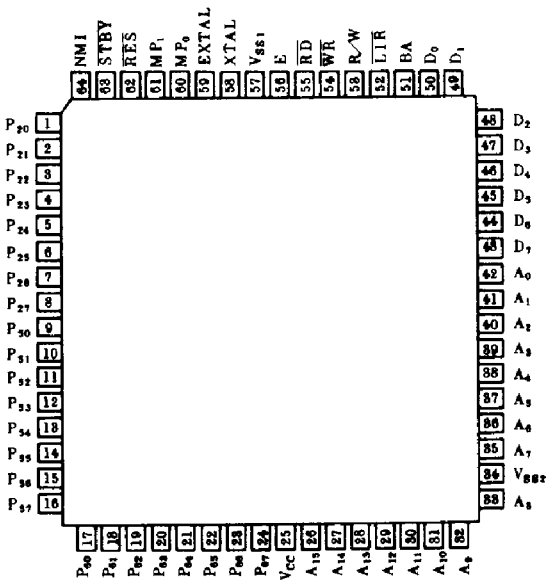

(Top View)

www.chipdocs.com Be sure to visit ChipDocs web site for more information.

■ **BLOCK DIAGRAM**

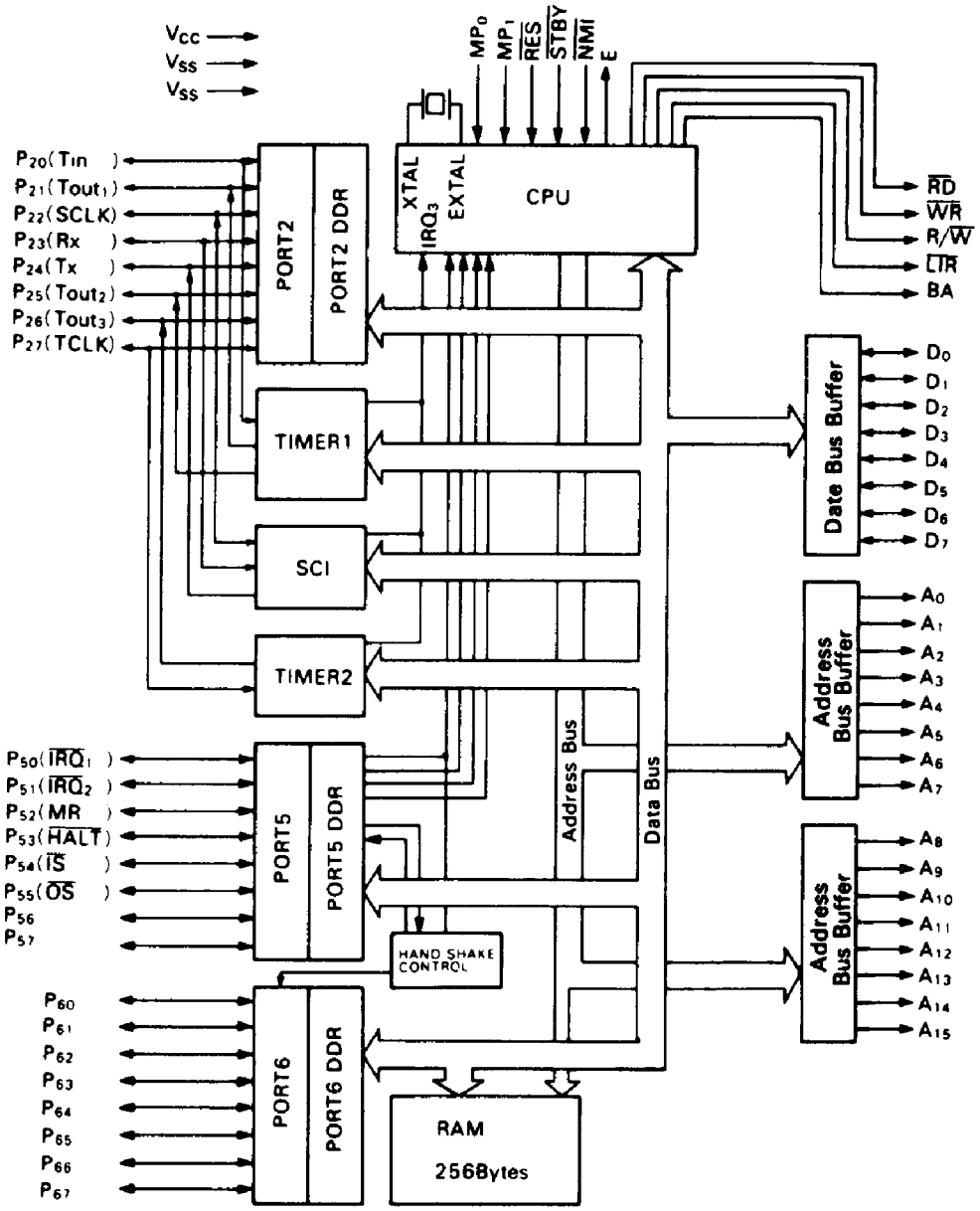

www.chipdocs.com Be sure to visit ChipDocs web site for more information.

■ ABSOLUTE MAXIMUM RATINGS

Item	Symbol	Value	Unit
Supply Voltage	V_{CC}	−0.3 ~ +7.0	V
Input Voltage	V_{in}	−0.3 ~ V_{CC} +0.3	V
Operating Temperature	T_{opr}	−20 ~ +75	°C
Storage Temperature	T_{stg}	−55 ~ +150	°C

(NOTE) This product has protection circuits in input terminal from high static electricity voltage and high electric field.
But be careful not to apply overvoltage more than maximum ratings to these high input impedance protection circuits. To assure the normal operation, we recommend V_{in}, V_{out}: $V_{SS} \leqq (V_{in}$ or $V_{out}) \leqq V_{CC}$.

■ ELECTRICAL CHARACTERISTICS

● DC CHARACTERISTICS (V_{CC} = 5.0V ± 10%, V_{SS} = 0V, T_a = −20°C ~ +75°C, unless otherwise noted.)

Item		Symbol	Test Condition	min	typ	max	Unit
Input "High" Voltage	$\overline{RES}$, $\overline{STBY}$	V_{IH}		V_{CC} − 0.5	–	V_{CC} +0.3	V
	EXTAL			V_{CC} × 0.7	–		
	Other Inputs			2.0	–		
Input "Low" Voltage	All Inputs	V_{IL}		−0.3	–	0.8***	V
Input Leakage Current	$\overline{NMI}$, $\overline{RES}$, $\overline{STBY}$, MP_0, MP_1	$\|I_{in}\|$	V_{in} = 0.5 ~ V_{CC} − 0.5V	–	–	1.0	μA
Three State Leakage Current	A_0 ~ A_{15}, D_0 ~ D_7, $\overline{RD}$, $\overline{WR}$, R/$\overline{W}$, Ports 2, 5, 6	$\|I_{TSI}\|$	V_{in} = 0.5 ~ V_{CC} − 0.5V	–	–	1.0	μA
Output "High" Voltage	All Outputs	V_{OH}	I_{OH} = −200μA	2.4	–	–	V
			I_{OH} = −10μA	V_{CC} − 0.7	–	–	V
Output "Low" Voltage	All Outputs	V_{OL}	I_{OL} = 1.6mA	–	–	0.4	V
Darlington Drive Current	Ports 2, 6	$-I_{OH}$	V_{out} = 1.5V	1.0	–	10.0	mA
Input Capacitance	All Inputs	C_{in}	V_{in} = 0V, f = 1MHz, Ta = 25°C	–	–	12.5	pF
Standby Current	Non Operation	I_{STB}		–	3.0	15.0	μA
Current Dissipation*		I_{SLP}	Sleeping (f = 1MHz**)	–	1.5	3.0	mA
			Sleeping (f = 1.5MHz**)	–	2.3	4.5	mA
			Sleeping (f = 2MHz**)**	–	3.0	6.0	mA
			Sleeping (f = 3 MHz)	–	4.5	9.0	mA
		I_{CC}	Operating (f = 1MHz**)	–	7.0	10.0	mA
			Operating (f = 1.5MHz**)	–	10.5	15.0	mA
			Operating (f = 2MHz**)**	–	14.0	20.0	mA
			Operating (f = 3 MHz)	–	21.0	30.0	mA
RAM Standby Voltage		V_{RAM}		2.0	–	–	V

* V_{IH} min = V_{CC} − 1.0V, V_{IL} max = 0.8V (All output terminals are at no load.)
** Current Dissipation of the operating or sleeping condition is proportional to the operating frequency. So the typ. or max. values about Current Dissipations at X MHz operation are decided according to the following formula:
typ. value (f = X MHz) = typ. value (f = 1MHz) × X
max. value (f = X MHz) = max. value (f = 1MHz) × X
(both the sleeping and operating)

*** SCLK 0.6V (−20°C ~ 0°C)

2

www.chipdocs.com Be sure to visit ChipDocs web site for more information.

• AC CHARACTERISTICS (V_{CC} = 5.0V ± 10%, V_{SS} = 0V, T_a = −20 ~ +75°C, unless otherwise noted.)

BUS TIMING

Item		Symbol	Test Condition	HD6301Y0			HD63A01Y0			HD63B01Y0			HD63C01Y0			Unit
				min.	typ.	max.	min.	typ.	max.	min.	typ.	max.	min.	typ.	max.	
Cycle Time		t_{cyc}		1	—	10	0.666	—	10	0.5	—	10	0.333	—	10	μs
Enable Rise Time		t_{Er}		—	—	25	—	—	25	—	—	25	—	—	20	ns
Enable Fall Time		t_{Ef}		—	—	25	—	—	25	—	—	25	—	—	20	ns
Enable Pulse Width "High" Level*		PW_{EH}		450	—	—	300	—	—	220	—	—	140	—	—	ns
Enable Pulse Width "Low" Level*		PW_{EL}		450	—	—	300	—	—	220	—	—	140	—	—	ns
Address, R/$\overline{W}$ Delay Time*		t_{AD}		—	—	250	—	—	190	—	—	160	—	—	120	ns
Data Delay Time	Write	t_{DDW}		—	—	200	—	—	160	—	—	120	—	—	100	ns
Data Set-up Time	Read	t_{DSR}		80	—	—	70	—	—	60	—	—	50	—	—	ns
Address, R/$\overline{W}$ Hold Time*		t_{AH1}		80	—	—	50	—	—	40	—	—	20	—	—	ns
Data Hold Time	Write*	t_{HW1}	Fig. 1	80	—	—	50	—	—	40	—	—	20	—	—	ns
$\overline{RD}$, $\overline{WR}$ Address Hold Time*		t_{AH2}		70	—	—	50	—	—	40	—	—	20	—	—	ns
$\overline{RD}$, $\overline{WR}$ Data Hold Time*		t_{HW2}		70	—	—	50	—	—	40	—	—	20	—	—	ns
Data Hold Time	Read	t_{HR}		0	—	—	0	—	—	0	—	—	0	—	—	ns
$\overline{RD}$, $\overline{WR}$ Pulse Width*		PW_{RW}		450	—	—	300	—	—	220	—	—	140	—	—	ns
$\overline{RD}$, $\overline{WR}$ Delay Time		t_{RWD}		—	—	40	—	—	40	—	—	40	—	—	40	ns
$\overline{RD}$, $\overline{WR}$ Hold Time		t_{HRW}		—	—	20	—	—	20	—	—	20	—	—	20	ns
$\overline{LIR}$ Delay Time		t_{DLR}		—	—	200	—	—	160	—	—	120	—	—	80	ns
$\overline{LIR}$ Hold Time		t_{HLR}		10	—	—	10	—	—	10	—	—	5	—	—	ns
Peripheral Read Access Time		t_{ACC}		—	—	—	—	—	—	—	—	—	180	—	—	ns
MR Set-up Time*		t_{SLR}		400	—	—	280	—	—	230	—	—	170	—	—	ns
MR Hold Time*		t_{HMR}	Fig. 2	—	—	100	—	—	70	—	—	50	—	—	25	ns
E Clock Pulse Width at MR		PW_{EMR}		—	—	9	—	—	9	—	—	9	—	—	9	μs
Processor Control Set-up Time		t_{PCS}	Fig. 3, 13, 14	200	—	—	200	—	—	200	—	—	100	—	—	ns
Processor Control Rise Time		t_{PCr}	Fig. 2, 3	—	—	100	—	—	100	—	—	100	—	—	50	ns
Processor Control Fall Time		t_{PCf}		—	—	100	—	—	100	—	—	100	—	—	50	ns
BA Delay Time		t_{BA}	Fig. 3	—	—	250	—	—	190	—	—	160	—	—	120	ns
Oscillator Stabilization Time		t_{RC}	Fig. 14	20	—	—	20	—	—	20	—	—	20	—	—	ms
Reset Pulse Width		PW_{RST}		3	—	—	3	—	—	3	—	—	3	—	—	t_{cyc}

*These timings change in approximate proportion to t_{cyc}. The figures in this characteristics represent those when t_{cyc} is minimum (= in the highest speed operation).

Peripheral Port Timing

Item		Symbol	Test condition	HD6303Y			HD63A03Y			HD63B03Y			HD63C03Y			Unit
				min	typ	max	min	typ	max	min	typ	max	min	typ	max	
Peripheral Data Set Up Time	Port 2,5,6	t_{pDSU}	Fig. 5	200	–	–	200	–	–	200	–	–	200	–	–	ns
Peripheral Data Hold Time	Port 2,5,6	t_{pDH}		200	–	–	200	–	–	200	–	–	200	–	–	ns
Delay Time (From Enable Fall Edge to Peripheral Output)	Port 2,5,6	t_{pWD}	Fig. 6	–	–	300	–	–	300	–	–	300	–	–	300	ns
Input Strobe Pulse Width		t_{pWIS}	Fig.10	200	–	–	200	–	–	200	–	–	200	–	–	ns
Input Data Hold Time	Port 6	t_{IH}		150	–	–	150	–	–	150	–	–	150	–	–	ns
Input Data Set-Up Time	Port 6	t_{IS}		100	–	–	100	–	–	100	–	–	100	–	–	ns
Output Strobe Delay Time		t_{DSD1} / t_{DSD2}	Fig.11	–	–	200	–	–	200	–	–	200	–	–	200	ns

www.chipdocs.com Be sure to visit ChipDocs web site for more information.

TIMER, SCI TIMING

Item		Symbol	Test Condition	HD6303Y			HD63A03Y			HD63B03Y			HD63C03Y			Unit
				min.	typ.	max.	min.	typ.	max.	min.	typ.	max.	min.	typ.	max.	
Timer 1 Input Pulse Width		t_{PWT}	Fig. 9	2.0	—	—	2.0	—	—	2.0	—	—	2.0	—	—	t_{cyc}
Delay Time (Enable Positive Transition to Timer Output)		t_{TOD}	Fig. 7, 8	—	—	400	—	—	400	—	—	400	—	—	400	ns
SCI Input Clock Cycle	Async. Mode	t_{Scyc}	Fig. 9	1.0	—	—	1.0	—	—	1.0	—	—	1.0	—	—	t_{cyc}
	Clock Sync.		Fig. 4	2.0	—	—	2.0	—	—	2.0	—	—	2.0	—	—	t_{cyc}
SCI Transmit Data Delay Time (Clock Sync. Mode)		t_{TXD}		—	—	220	—	—	220	—	—	220	—	—	220	ns
SCI Receive Data Set-up Time (Clock Sync. Mode)		t_{SRX}	Fig. 4	260	—	—	260	—	—	260	—	—	260	—	—	ns
SCI Receive Data Hold Time (Clock Sync. Mode)		t_{HRX}		100	—	—	100	—	—	100	—	—	100	—	—	ns
SCI Input Clock Pulse Width		t_{PWSCK}	Fig. 9	0.4	—	0.6	0.4	—	0.6	0.4	—	0.6	0.4	—	0.6	t_{Scyc}
Timer 2 Input Clock Cycle		t_{tcyc}		2.0	—	—	2.0	—	—	2.0	—	—	2.0	—	—	t_{cyc}
Timer 2 Input Clock Pulse Width		t_{PWTCK}		200	—	—	200	—	—	200	—	—	200	—	—	ns
Timer 1–2, SCI Input Clock Rise Time		t_{CKr}		—	—	100	—	—	100	—	—	100	—	—	50	ns
Timer 1–2, SCI Input Clock Fall Time		t_{CKf}		—	—	100	—	—	100	—	—	100	—	—	50	ns

2

www.chipdocs.com Be sure to visit ChipDocs web site for more information.

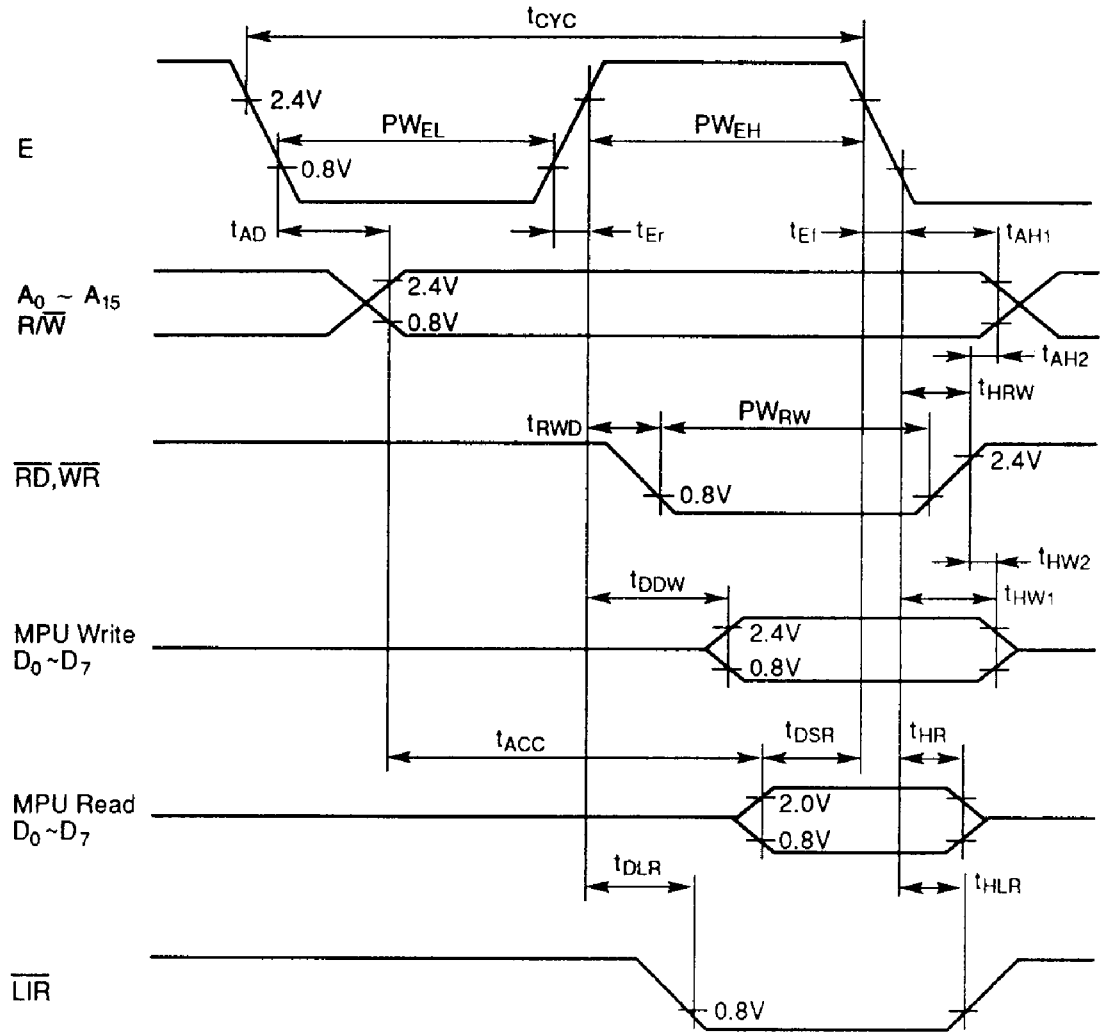

Figure 1 Bus Timing

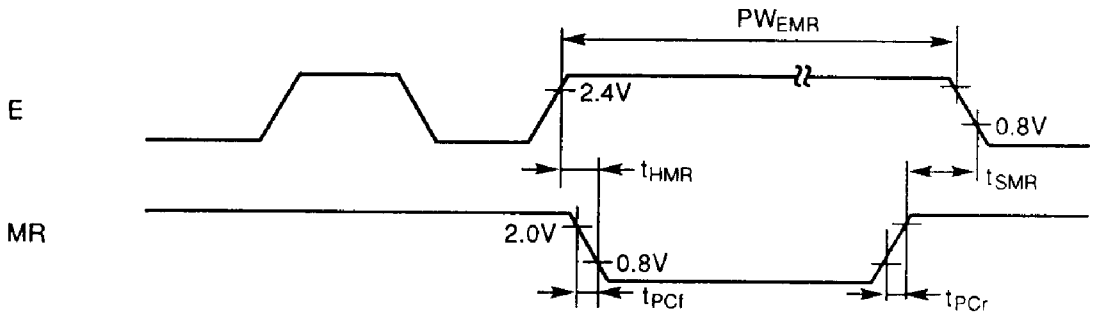

Figure 2 Memory Ready and E Clock Timing

www.chipdocs.com Be sure to visit ChipDocs web site for more information.

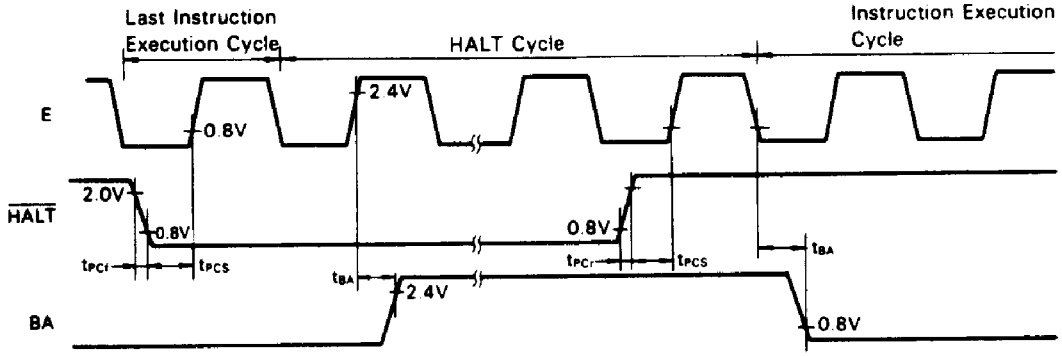

Figure 3 $\overline{\text{HALT}}$ and BA Timing

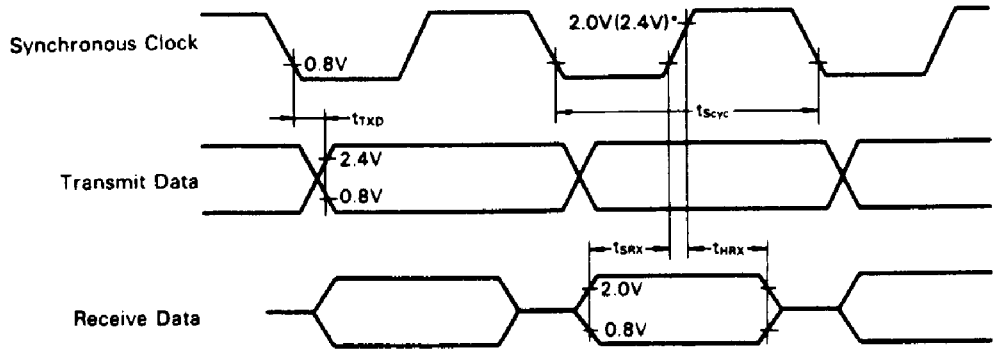

*2.0V is high level when clock input.
2.4V is high level when clock output.

Figure 4 SCI Clocked Synchronous Timing

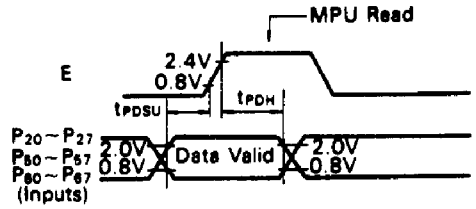

Figure 5 Port Data Set-up and Hold Times (MPU Read)

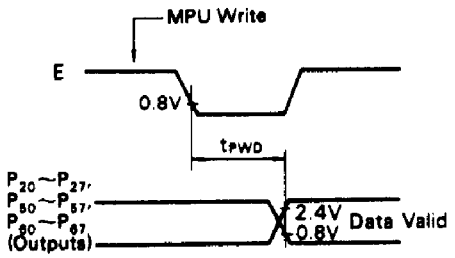

Figure 6 Port Data Delay Times (MPU Write)

www.chipdocs.com Be sure to visit ChipDocs web site for more information.

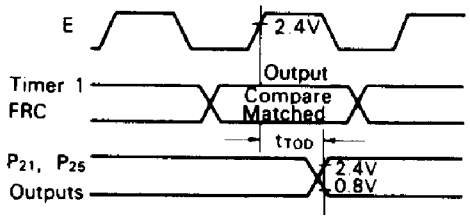

Figure 7 Timer 1 Output Timing

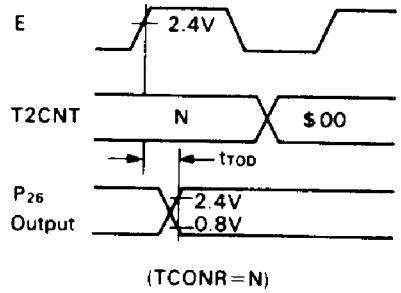

Figure 8 Timer 2 Output Timing

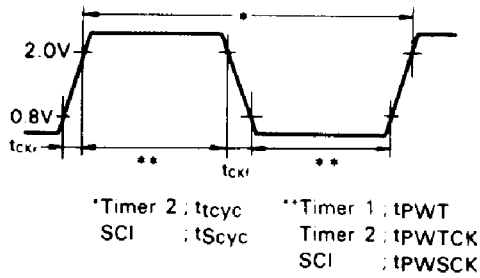

Figure 9 Timer 1·2, SCI Input Clock Timing

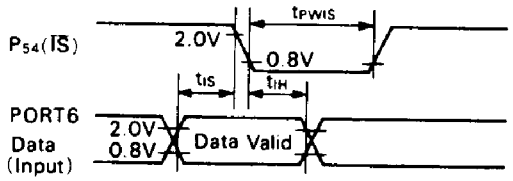

Figure 10 Port 6 Input Latch Timing

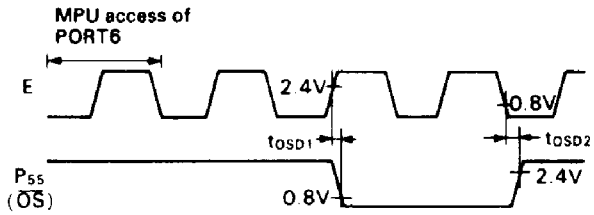

Figure 11 Output Strobe Timing

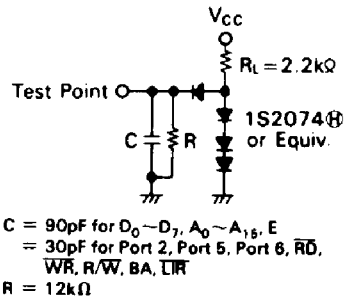

Figure 12 Bus Timing Test Loads (TTL Load)

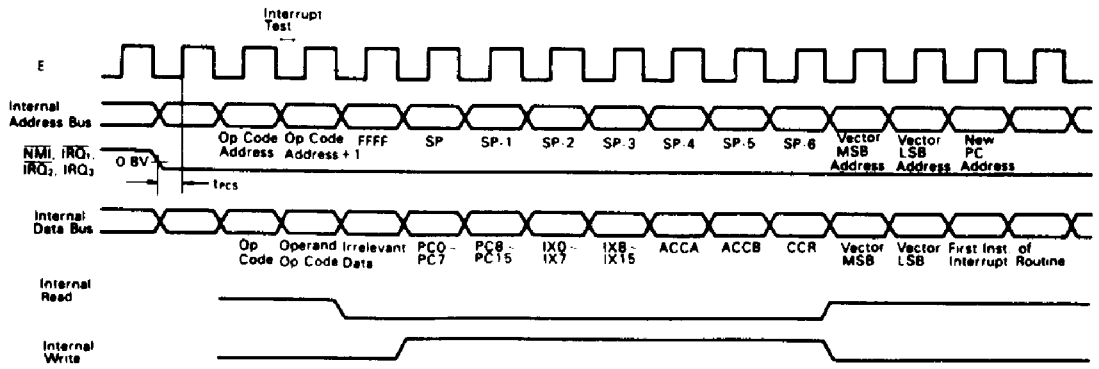

Figure 13 Interrupt Sequence

www.chipdocs.com Be sure to visit ChipDocs web site for more information.

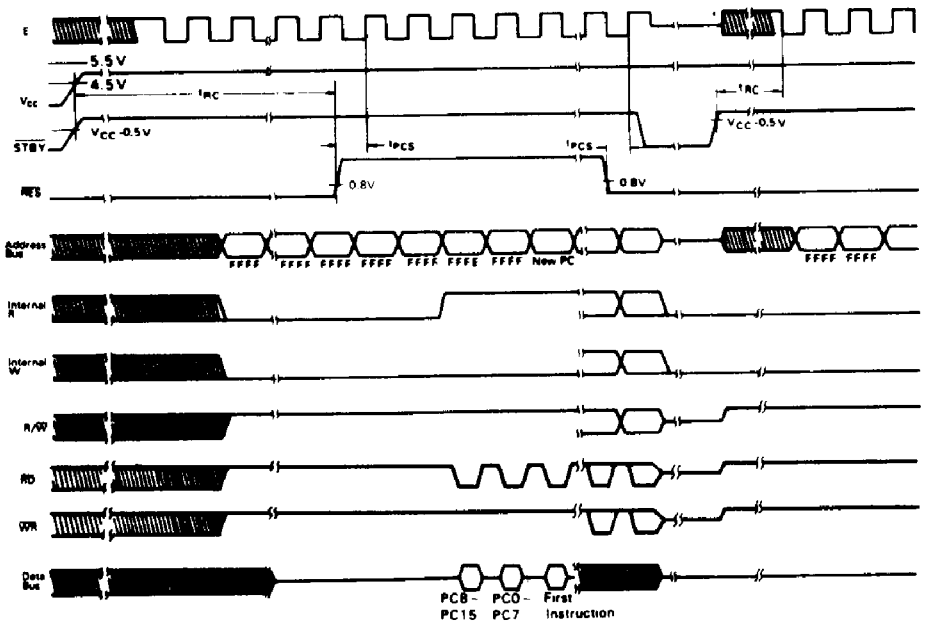

Figure 14 Reset Timing

■ FUNCTIONAL PIN DESCRIPTION

- **V_{CC}, V_{SS}**

V_{CC} and V_{SS} provide power to the MPU with 5V±10% supply. In the case of low speed operation (fmax=500kHz), the MPU can operate with 3 to 5.5 volts. Two V_{SS} pins should be tied to ground.

- **XTAL, EXTAL**

These two pins interface with an AT-cut parallel resonant crystal. Divide-by-four circuit is on chip, so if 4MHz crystal oscillator is used, the system clock is 1MHz for example.

EXTAL pin can be drived by the external clock with 45% to 55% duty. The system clock which is one fourth frequency of the external clock is generated in the LSI. The external clock frequency should be less than four times of the maximum operating frequency. When using the external clock, XTAL pin should be open. Fig. 15 shows examples of connection circuit. The crystal and C_{L1}, C_{L2} should be mounted as close as possible to XTAL and EXTAL pins. Any line must not cross the line between the crystal oscillator and XTAL, EXTAL.

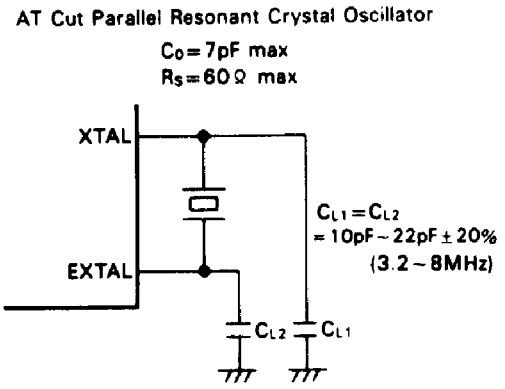

Figure 15 Connection Circuit

- **STBY**

This pin makes the MPU standby mode. In "Low" level, the oscillation stops and the internal clock is stabilized to make reset condition. To retain the contents of RAM at standby mode, "0" should be written into RAM enable bit (RAME). RAME is the bit 6 of the RAM/port 5 control register at $0014. RAM is disabled by this operation and its contents is sustained.

Refer to "LOW POWER DISSIPATION MODE" for the standby mode.

- **Reset (RES)**

This pin resets the MPU from power OFF state and provides a startup procedure. During power-on, RES pin must be held "Low" level for at least 20ms.

The CPU registers (accumulator, index register, stack pointer, condition code register except for interrupt mask bit), RAM and the data register of ports are not initialized during reset, so their contents are undefined in this procedure.

To reset the MPU during operation, RES should be held "Low" for at least 3 system-clock cycles. At the 3rd cycle during "Low" level, all the address buses become "High". When RES remains "Low", the address buses keep "High". If RES becomes "High", the MPU starts the next operation.

(1) Latch the value of the mode program pins; MP_0 and MP_1.
(2) Initialize each internal register (Refer to Table 4).
(3) Set the interrupt mask bit. For the CPU to recognize the maskable interrupts $\overline{IRQ_1}$, $\overline{IRQ_2}$ and IRQ_3, this bit should be cleared in advance.
(4) Put the contents (=start address) of the last two addresses ($FFFE, $FFFF) into the program counter and start the program from this address. (Refer to Table 1).

- **Enable (E)**

This pin provides a TTL-compatible system clock to external circuits. Its frequency is one fourth that of the crystal oscillator or external clock. This pin can drive one TTL load and 90pF capacitance.

- **Non-Maskable Interrupt (NMI)**

When the falling edge of the input signal is detected at this pin, the CPU begins non-maskable interrupt sequence internally. As

www.chipdocs.com Be sure to visit ChipDocs web site for more information.

well as the $\overline{IRQ}$ mentioned below, the instruction being executed at $\overline{NMI}$ signal detection will proceed to its compeletion. The interrupt mask bit of the condition code register doesn't affect non-maskable interrupt at all.

In response to an $\overline{NMI}$ interrupt, the contents of the program counter, index register, accumulators and condition code register will be saved onto the stack. Upon completion of this sequence, a vector is fetched from $FFFC and $FFFD to transfer their contents into the program counter and branch to the non-maskable interrupt service routine.

(Note) At reset start, the stack pointer should be initialized on an appropriate memory area and then the falling edge be input to $\overline{NMI}$ pin.

- **Interrupt Request ($\overline{IRQ_1}$, $\overline{IRQ_2}$)**

These are level-sensitive pins which request an internal interrupt sequence to the CPU. At interrupt request, the CPU will complete the current instruction before the acceptance of the request. Unless the interrupt mask in the condition code register is set, the CPU starts an interrupt sequence; if set, the interrupt request will be ignored. When the sequence starts, the contents of the program counter, index register, accumulators and condition code register will be saved onto the stack, then the CPU sets the interrupt mask bit and will not acknowledge the maskable request. During the last cycle, the CPU fetches vectors depicted in Table 1 and transfers their contents to the program counter and branches to the service routine.

The CPU uses the external interrupt pins ($\overline{IRQ_1}$ and $\overline{IRQ_2}$) also as port pins P_{50} and P_{51}, so it provides an enable bit to Bit 0 and 1 of the RAM port 5 control register at $0014. Refer to "RAM/PORT 5 CONTROL REGISTER" for the details.

When one of the internal interrupts, ICI, OCI, TOI, CMI or SIO is generated, the CPU produces internal interrupt signal (IRQ_3). IRQ_3 functions just the same as $\overline{IRQ_1}$ or $\overline{IRQ_2}$ except for its vector address. Fig. 16 shows the block diagram of the interrupt circuit.

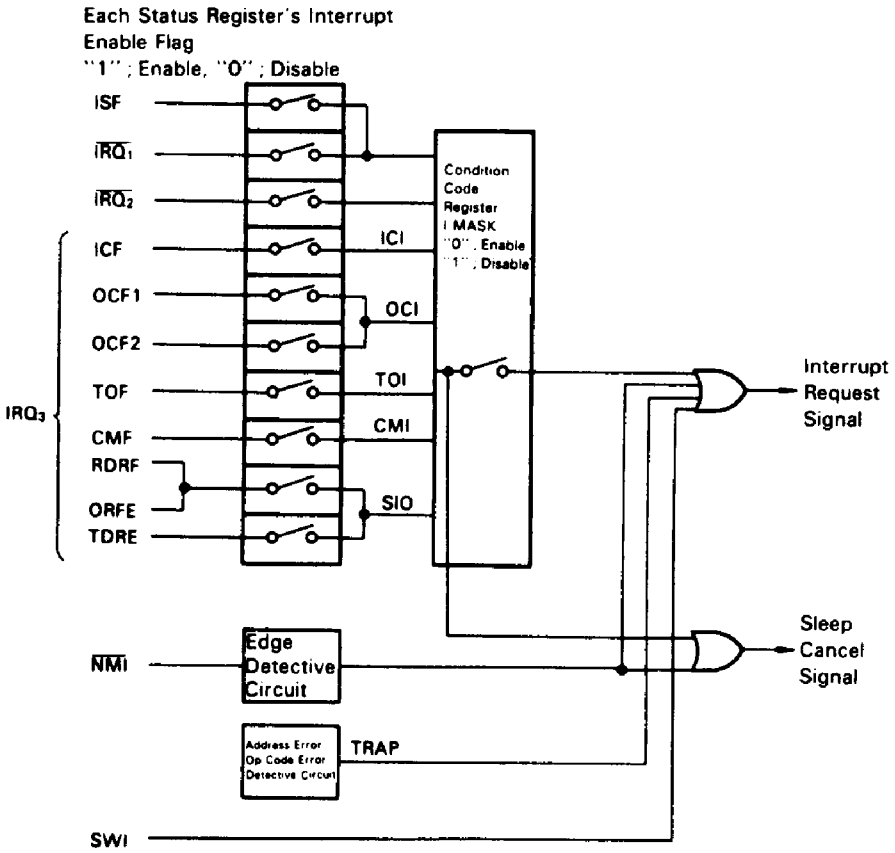

Figure 16 Interrupt Circuit Block Diagram

www.chipdocs.com Be sure to visit ChipDocs web site for more information.

Table 1 Interrupt Vector Memory Map

Priority	Vector MSB	Vector LSB	Interrupt
Highest	FFFE	FFFF	$\overline{RES}$
	FFEE	FFEF	TRAP
	FFFC	FFFD	$\overline{NMI}$
	FFFA	FFFB	SWI (Software Interrupt)
	FFF8	FFF9	$\overline{IRQ_1}$, ISF (port 6 Input Strobe)
	FFF6	FFF7	ICI (Timer 1 Input Capture)
	FFF4	FFF5	OCI (Timer 1 Output Compare 1, 2)
	FFF2	FFF3	TOI (Timer 1 Overflow)
	FFEC	FFED	CMI (Timer 2 Counter Match)
	FFEA	FFEB	$\overline{IRQ_2}$
Lowest	FFF0	FFF1	SIO (RDRF+ORFE+TDRE+PER)

- **Mode Program (MP_0, MP_1)**
  Set MP_0 "High" and MP_1 "Low".

- **Read/Write (R/$\overline{W}$)**
  This signal, usually be in read state ("High"), shows whether the CPU is in read ("High") or write ("Low") state to the peripheral or memory devices. This can drive one TTL load and 30pF capacitance.

- **$\overline{RD}$, $\overline{WR}$**
  These signals show active low outputs when the CPU is reading/writing to the peripherals or memories. This enables the CPU easy to access the peripheral LSI with $\overline{RD}$ and $\overline{WR}$ input pins. These pins can drive one TTL load and 30pF capacitance.

- **Load Instruction Register ($\overline{LIR}$)**
  This signal shows the instruction opecode being on data bus (active low). This pin can drive one TTL load and 30pF capacitance.

- **Memory Ready (MR; P_{52})**
  This is the input control signal which stretches the system clock's "High" period to access low-speed memories. HD6303Y can select three kinds of low-speed memory access method by RAM/Port 5 Control Register's MRE bit and AMRE bit. In the case that CPU accesses low-speed memories by the external MR signal (MRE="1", AMRE="0"), the system clock operates in normal sequence when this signal is in "High".
  But this signal in "Low", the "High" period of the system clock will be stretched depending on its "Low" level duration in integral multiples of the cycle time. This allows the CPU to interface with low-speed memories (See Fig. 2). Up to 9μs can be stretched.
  During internal address space access or nonvalid memory access, MR is prohibited internally to prevent decrease of operation speed. Even in the halt state, MR can also stretch "High" period of system clock to allow peripheral devices to access low-speed memories. Refer to "RAM/PORT 5 CONTROL REGISTER" for more details.

- **Halt ($\overline{HALT}$; P_{53})**
  This is an input control signal to stop instruction execution and to release buses. When this signal switches to "Low", the CPU stops to enter into the halt state after having executed the present instruction. When entering into the halt state, it makes BA "High" and also an address bus, data bus, $\overline{RD}$, $\overline{WR}$, R/$\overline{W}$ high impedance. When an interrupt is generated in the halt state, the CPU uses the interrupt handler after the halt is cancelled. When halted during the sleep state, the CPU keeps the sleep state, while BA is "High" and releases the buses. Then the CPU returns to the previous sleep state when the $\overline{HALT}$ signal becomes "High".
  (Note) Please don't switch the $\overline{HALT}$ signal to "Low" when the CPU executes the WAI instruction and is in the interrupt wait state to avoid the trouble of the CPU's operation after the halt is cancelled.

- **Bus Available (BA)**
  This is an output control signal which is normally "Low" but "High" when the CPU accepts $\overline{HALT}$ and releases the buses. The HD6800 and HD6802 make BA "High" and release the buses at WAI execution, while the HD6303Y doesn't make BA "High" under the same condition.

■ **PORT**
The HD6303Y provides three 8-bit I/O ports. Each port provides Data Direction Register (DDR) which controls the I/O state by the bit.

Table 2 Port and Data Direction Register Address

Port	Port Address	Data Direction Register
Port 2	$0003	$0001
Port 5	$0015	$0020
Port 6	$0017	$0016

- **Port 2**
  An 8-bit I/O port. Port 2 DDR (P2DDR) controls the I/O state. This port provides DDR corresponding to each bit and can define input or output by the bit ("0" for input, "1" for output).
  As Port 2 DDR is cleared during reset, it will be an input port.
  Port 2 is also used as an I/O pin for timer 1, Timer 2 and the SCI. Pins for Timers and the SCI set or reset each DDR depending on their functions and become I/O pins. When port 2 functions as an I/O port after used as I/O pins of the timers or the SCI, the I/O direction of the pins remain as it is used as the I/O pin of timer and SCI.
  Port 2 can drive one TTL load and 30pF capacitance. This port can produce 1mA when V_{out}=1.5V to drive directly the base of Darlington transistor.

P_{20} (Tin)
P_{20} is also used as an external input pin for the input-capture. This pin is an I/O port which is an input or output as defined by the Data Direction Register (P_{20}DDR) ("0" for an input and "1" for an output). Then either a signal to or from P_{20} ("to" for an output port, "from" for an input port) is always input to the Timer 1 input capture.

www.chipdocs.com Be sure to visit ChipDocs web site for more information.

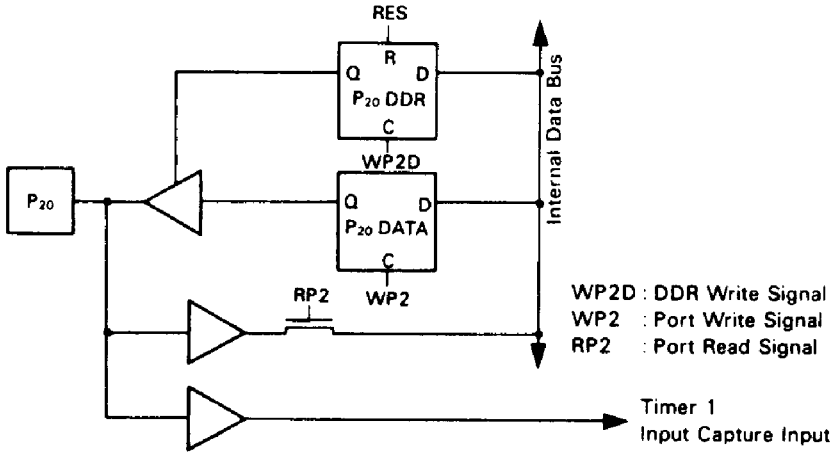

P_{21} (Tout 1), P_{24} (Tx), P_{25} (Tout 2), P_{26} (Tout 3)
These four pins can be also used as output pins for Timer 1, Timer 2 and a transmit output of the SCI. Timer 1, and the SCI have a register which enables output. By setting these registers, they automatically will be output pins of timer or the SCI.

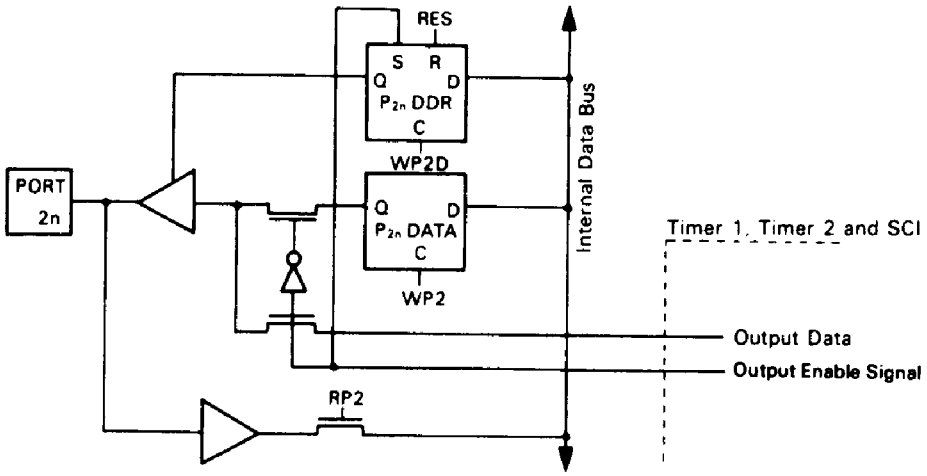

www.chipdocs.com Be sure to visit ChipDocs web site for more information.

P_{22} (SCLK)

P_{22} is also used as a clock I/O pin for the SCI. It is selected as a clock input or output pin by the operating mode of the SCI. It is usable as an I/O port when the SCI has no clock input or output (as an output port if P_{22} DDR = 1, as an input port if P_{22} DDR = 0).

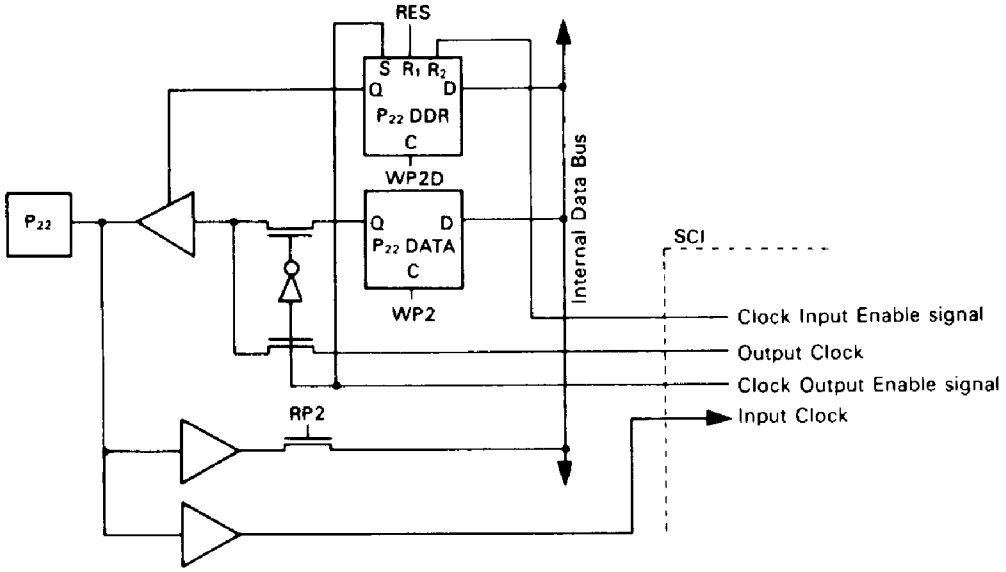

P_{23} (Rx), P_{27} (TCLK)

P_{23} and P_{27} are also used as received data input pins for the SCI and external clock input pins for Timer 2. The SCI and Timer 2 have registers which enable input. If the registers are set, the DDR (P_{23}DDR, P_{27}DDR) are cleared and P_{23} and P_{27} will be input pins for Rx and TCLK.

Since the SCI will be a clocked synchronous mode by an external clock-input during reset, the DDR of P_{22} is cleared automatically and P_{22} is an input port. Set the SCI to a mode where P_{22} is not used (CC0 or CC1 of the RMC Register is "0" or "1" respectively) and write "1" to the P_{22} DDR to make P_{22} an output port.

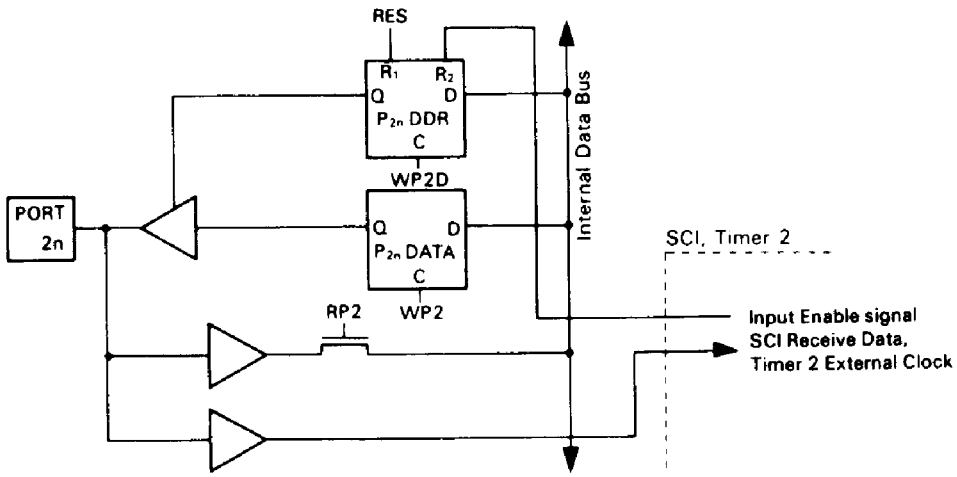

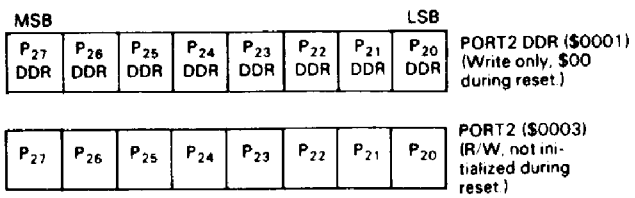

www.chipdocs.com Be sure to visit ChipDocs web site for more information.

• Port 5

An 8-bit I/O port. The DDR of port 5 controls I/O state. Each bit of port 5 has a DDR which defines I/O state ("0" for input and "1" for output).

During reset, the DDR of port 5 is cleared and port 5 becomes an input port.

Port 5 is also usable as $\overline{IRQ_1}$, $\overline{IRQ_2}$, $\overline{HALT}$, MR and the strobed signal of port 6 for handshake ($\overline{IS}$, $\overline{OS}$). It is set to input or output automatically if it is used as these control signal pins (except P_{54}, $\overline{IS}$). Since the DDR of port 5, as is port 2, is set or reset by the control signal, I/O directions of the I/O ports are retained after the control signal is disabled. Port 5 can drive one TTL load and 90pF capacitance.

P_{50} ($\overline{IRQ_1}$), P_{51} ($\overline{IRQ_2}$)

P_{50} and P_{51} are also usable as interrupt pins. The RAM/port 5 control registers of $\overline{IRQ_1}$ and $\overline{IRQ_2}$ have enable bits (IQ1E, IQ2E). When these bits are set to "1", P_{50} and P_{51} will automatically be interrupt input pins.

P_{52} (MR), P_{53} ($\overline{HALT}$)

P_{52} and P_{53} are also usable as MR and $\overline{HALT}$ inputs. MR and $\overline{HALT}$ have enable bits (MRE, HLTE) in the RAM/Port 5 Control Register as $\overline{IRQ_1}$ and $\overline{IRQ_2}$. Since MRE is cleared during reset, P_{52} is usable as an I/O port, and HLTE is set during reset, the DDR of P_{53} will be automatically reset to be a $\overline{HALT}$ input pin. HLTE of the RAM/Port 5 Control Register has to be cleared to use P_{53} as an I/O port.

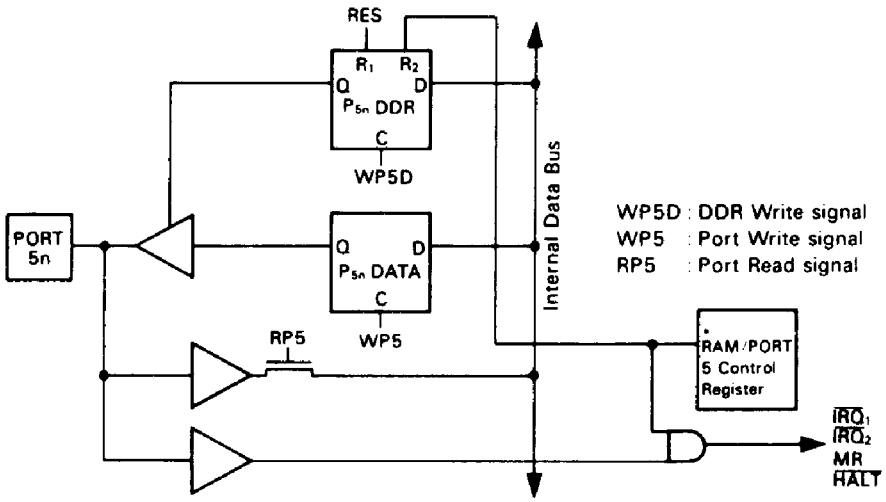

* Initializing value during reset;
IRQ1E = "0", IRQ2E = "0", MRE = "0", HLTE = "1"

P_{54} ($\overline{IS}$)

P_{54} is also usable as the input strobe ($\overline{IS}$) for port 6 handshake interface. This pin, as is P_{20}, is always an I/O port. If P_{54} is used as an output port (set the DDR of P_{54} to "1"), an output signal from P_{54} will be the input to $\overline{IS}$.

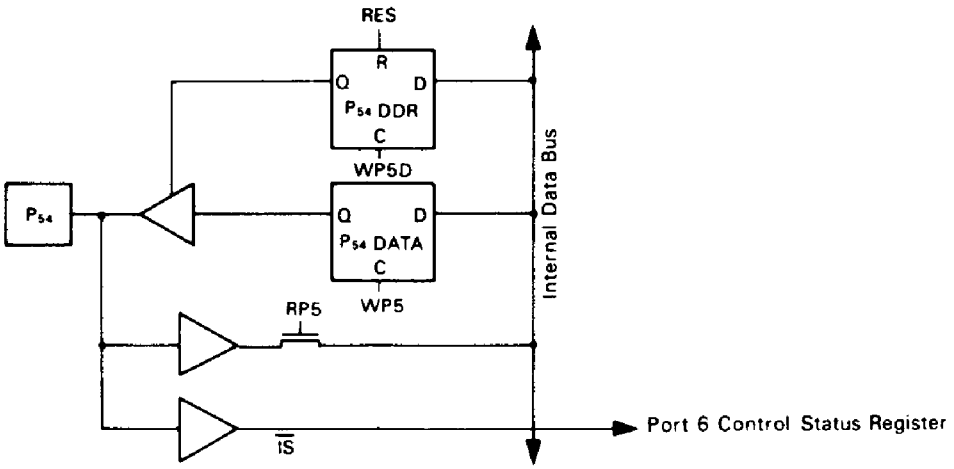

www.chipdocs.com Be sure to visit ChipDocs web site for more information.

P_{55} ($\overline{OS}$)

P_{55} is also usable as the output strobe ($\overline{OS}$) for port 6 handshake interface. It will be an I/O port during reset, and an $\overline{OS}$ output pin by setting the $\overline{OS}$ enable register (OSE) of the port 6 Control Status Register (P6CSR).

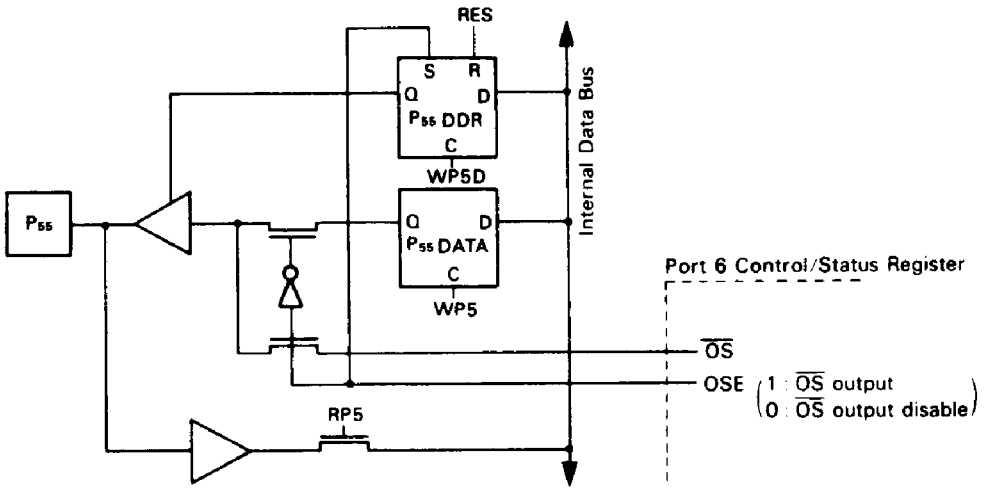

P_{56}, P_{57}

P_{56} and P_{57} are I/O ports.

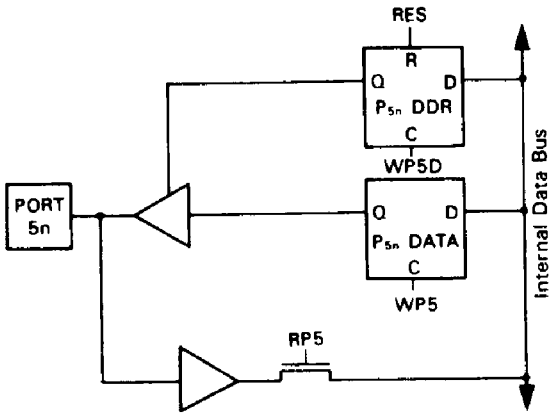

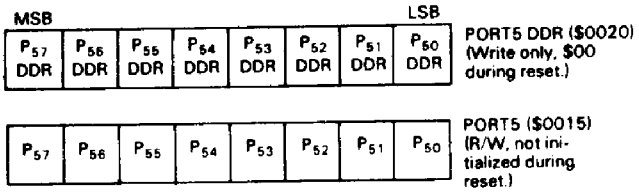

www.chipdocs.com Be sure to visit ChipDocs web site for more information.

• Port 6

8-bit I/O port. Port 6 DDR controls I/O state. Each bit of port 6 has a DDR and designates input or output ("0" for input, "1" for output). During reset, Port 6 DDR is cleared and port 6 becomes an input port.

Port 6 controls parallel handshake interface besides functions as an I/O port. Therefore, it provides DDRs to control and IS LATCH to latch the input data.

Port 6 can drive one TTL load and 30pF capacitance. It can drive directly the base of Darlington transistor as port 2.

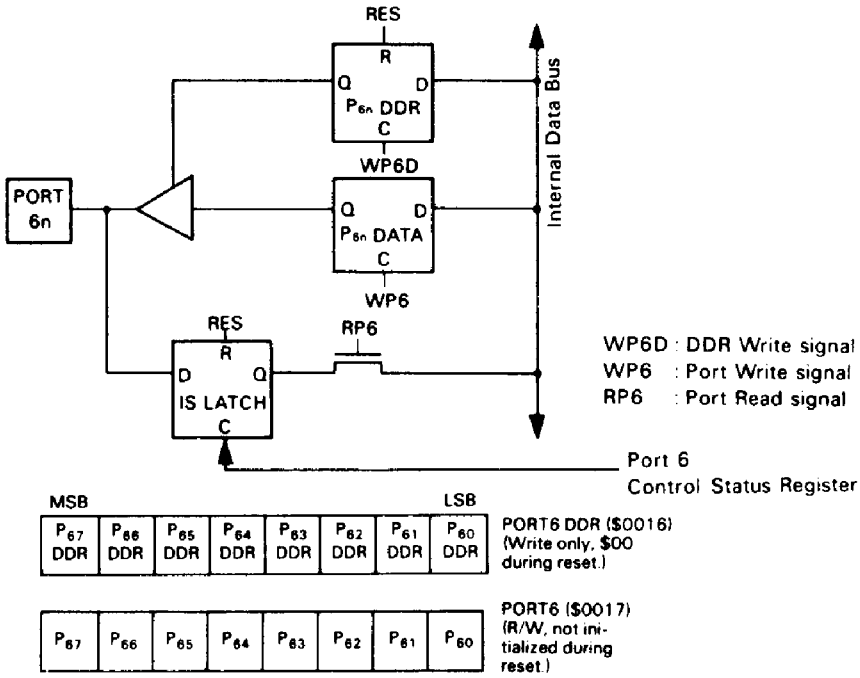

■ BUS

• Address Bus ($A_0 \sim A_{15}$)

Address Bus ($A_0 \sim A_{15}$) is used for addressing the memory and peripheral LSI.

This bus can interface with the bus of HMCS 6800 and drive one TTL load and 90pF capacitance.

• Data Bus ($D_0 \sim D_7$)

8-bit parallel data bus for data transmit between the memory or peripheral LSI. This bus can drive one TTL load and 90pF capacitance.

■ RAM/PORT 6 CONTROL REGISTER

The control register located at $0014 controls on-chip RAM and port 5.

RAM/Port 5 Control Register (RP5CR)

7	6	5	4	3	2	1	0	
STBY PWR	RAME	STBY FLAG	AMR E	HLTE	MRE	IRQ_2 E	IRQ_1 E	$0014

Bit 0, Bit 1 $\overline{IRQ_1}$, $\overline{IRQ_2}$ Enable Bit (IRQ_1E, IRQ_2E)

When using P_{50} and P_{51} as interrupt pins, write "1" in these bits. When the bit is set to "1", the DDRs corresponding to P_{50} and P_{51} are cleared and become $\overline{IRQ_1}$ input pin and $\overline{IRQ_2}$ input pin. When IRQ_1E and IRQ_2E are set, P_{50} and P_{51} cannot be used as an output ports. When "0", the CPU doesn't accept an external interrupt or a sleep cancellation by the external interrupt. These bits are cleared during reset.

Bit 2 Memory Ready Enable Bit (MRE)

When using P_{52} as an input pin of the "memory ready" signal, write "1" in this bit. When set, P_{52} DDR is automatically cleared and becomes the MR input pin. The bit is cleared during reset.

Bit 3 Halt Enable Bit (HLTE)

When using P_{53} as an input pin of the $\overline{HALT}$ signal, write "1" in this bit. When this bit is set, P_{53} DDR is automatically cleared and becomes the Halt input pin. If the bit is "0", the Halt function is inhibited and P_{53} is used as an I/O port. The bit is set to "1" during reset.

Bit 4 Auto Memory Ready Enable Bit (AMRE)

When the bit is set and the CPU accesses the external address, "memory ready" operates automatically and stretches the E clock's "High" duration for one system clock. When MRE bit of bit 2 is cleared and when the CPU accesses the external address space, the function operates. When MRE bit is set and then the CPU accesses the external address space with P_{52}(MR) pin in "low", "memory ready" operates automatically. This bit is set to "1" during reset.

www.chipdocs.com Be sure to visit ChipDocs web site for more information.

Table 3 "Memory Ready" Function

MRE	AMRE	Function
0	0	"Memory ready" inhibited.
0	1	When the CPU accesses the external address, "High" duration of E clock automatically becomes one-cycle longer. This state is retained during reset.
1	0	"Memory ready" operates by P_{52} (MR) pin. The function is the same as that of the HD6301X0.
1	1	When the CPU accesses the external address space with the P_{52} (MR) pin in "low", the "auto memory ready" operates. This function is effective if it has both "high-speed memory" and "slow memory" outside. Input $\overline{CS}$ signal of "slow memory" to MR pin.

Bit 5 Standby Flag (STBY FLAG)

By clearing this flag, HD6303Y gets into the standby mode by software. This flag is set to "1" during reset, so the standby mode is canceled with $\overline{RES}$ pin in "low". The $\overline{RES}$ pin should be in "low" until oscillation becomes stable (min. 20ms.). If the $\overline{STBY}$ pin in is in "low", the standby mode can not be canceled with the $\overline{RES}$ pin in "low".

Bit 6 RAM Enable (RAME)

On-chip RAM can be disabled by this control bit. By resetting the MPU, "1" is set to this bit, and on-chip RAM is enabled. When this bit is cleared (=logic "0") on-chip RAM is invalid and the CPU can read data from external memory. This bit should be "0" before getting into the standby mode to protect on-chip RAM data.

Bit 7 Standby Power Bit (STBY PWR)

When V_{CC} is not provided in standby mode, this bit is cleared. This is a flag for read/write and can be read by software. If this bit is set before standyby mode, and remains set even after returning from standby mode, V_{CC} voltage is provided during standby mode and the on-chip RAM data is valid.

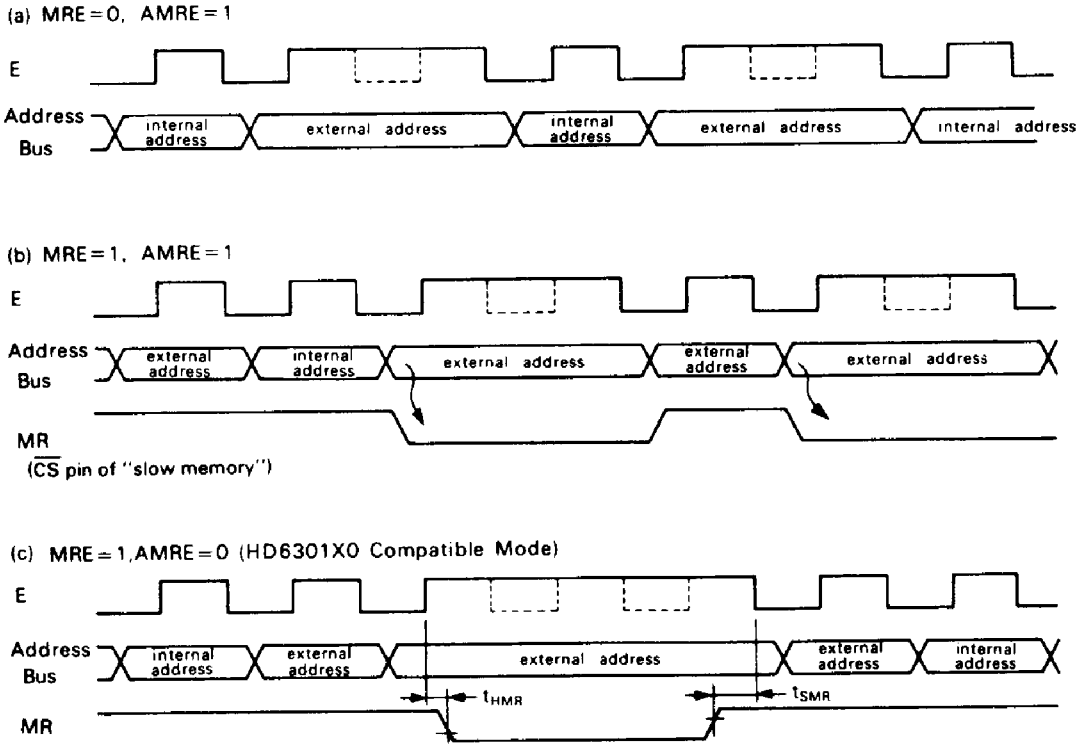

Figure 17 Memory Ready Timing

■ **Port 6 Control/Status Register**

This is the Control/Status Register for parallel handshake interface using Port 6. The functions are as follows;

1) Latches input data to Port 6 at the $\overline{IS}$ (P_{54}) falling edge.
2) Outputs a strobe signal $\overline{OS}$ (P_{55}) outward by reading or writing to port 6.
3) When IS FLAG is set at the $\overline{IS}$ falling edge, an interrupt occurs.

The following shows Port 6 Control/Status Register (P6CSR).

7	6	5	4	3	2	1	0	
IS* FLAG	IS IRQ1 ENABLE	OSE	OSS	LATCH ENABLE	–	–	–	$0021

*Bit 7 is Read-Only bit

www.chipdocs.com Be sure to visit ChipDocs web site for more information.

Bit 0
Bit 1 Not used.
Bit 2

Bit 3: Latch Enable
This register controls the input latch for Port 6 (ISLATCH). When this bit is set to "1", the input data to port 6 will be latched inward at the $\overline{IS}$ (P_{54}) falling edge. An input latch will be canceled by reading Port 6, which enables to latch the next data. If cleared, the input latch remains canceled and this bit functions as a usual input port. This bit is cleared during reset.

Bit 4: OSS Output Strobe Select
This register initiates an output strobe ($\overline{OS}$) from P_{55} by reading or writing to port 6. When cleared, $\overline{OS}$ occurs by reading Port 6. When set, $\overline{OS}$ occurs by writing to Port 6. This bit is cleared during reset.

Bit 5: OSE Output Strobe Enable
This register decides the enabling or disabling of the output strobe. When cleared, P_{55} functions as an I/O port. When set, P_{55} functions as an $\overline{OS}$ output pin. (P_{55} DDR is set by OSE.) This bit is cleared during reset.

Bit 6: IS $\overline{IRQ_1}$ Enable Input Strobe Interrupt Enable
When set, an $\overline{IRQ_1}$ interrupt to the CPU occurs by setting IS FLAG of bit 7. When cleared, the interrupt does not occur. This bit is cleared during reset.

Bit 7: IS Flag Input Strobe Flag
This flag is set at the IS (P_{54}) falling edge. This flag is for read-only. When set, the flag is cleared by reading or writing to Port 6 after reading the Port 6 Control Status Register. This bit is cleared during reset.

■ MEMORY MAP

The MPU can address up to 65k bytes. Memory map is shown in Fig. 20. 40 addresses ($0000 ~ $0027 except $00, $02, $04, $05, $06, $07, $18) are the internal registers as shown in Table 4.

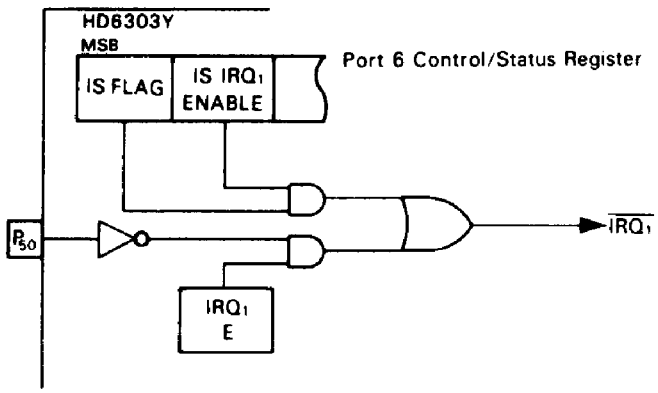

Figure 18 Input Strobe Interrupt block Diagram

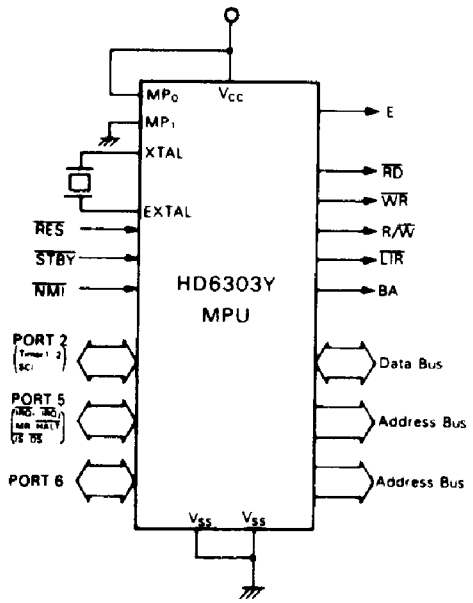

Figure 19 HD6303Y Operating Function

www.chipdocs.com Be sure to visit ChipDocs web site for more information.

Table 4 Internal Register

Address	Register	Abbreviation	R/W**	Initialized value during reset***
00*	Port 1 DDR (Data Direction Register)	P1DDR	W	$FE
01	Port 2 DDR	P2DDR	W	$00
02*	Port 1	PORT1	R/W	indefinite
03	Port 2	PORT2	R/W	indefinite
04*	Port 3 DDR	P3DDR	W	$FE
05*	Port 4 DDR	P4DDR	W	$00
06*	Port 3	PORT3	R/W	indefinite
07*	Port 4	PORT4	R/W	indefinite
08	Timer Control/Status Register 1	TCSR1	R/W	$00
09	Free Running Counter (MSB)	FRCH	R/W	$00
0A	Free Running Counter (LSB)	FRCL	R/W	$00
0B	Output Compare Register 1 (MSB)	OCR1H	R/W	$FF
0C	Output Compare Register 1 (LSB)	OCR1L	R/W	$FF
0D	Input Capture Register (MSB)	ICRH	R	$00
0E	Input Capture Register (LSB)	ICRL	R	$00
0F	Timer Control/Status Register 2	TCSR2	R/W	$10
10	Rate/Mode Control Register	RMCR	R/W	$C0
11	Tx/Rx Control Status Register 1	TRCSR1	R/W	$20
12	Receive Data Register	RDR	R	$00
13	Transmit Data Register	TDR	W	indefinite
14	RAM/Port 5 Control Register	RP5CR	R/W	$F8 or $78
15	Port 5	PORT5	R/W	indefinite
16	Port 6 DDR	P6DDR	W	$00
17	Port 6	PORT6	R/W	indefinite
18	Port 7	PORT7	R/W	indefinite
19	Output Compare Register 2 (MSB)	OCR2H	R/W	$FF
1A	Output Compare Register 2 (LSB)	OCR2L	R/W	$FF
1B	Timer Control/Status Register 3	TCSR3	R/W	$20
1C	Time Constant Register	TCONR	W	$FF
1D	Timer 2 Up Counter	T2CNT	R/W	$00
1E	Tx/Rx Control Status Register 2	TRCSR2	R/W	$28
1F****	Test Register*	TSTREG	—	—
20	PORT 5 DDR	P5DDR	W	$00
21	PORT 6 Control/Status Register	P6CSR	R/W	$07
22	—	—	—	—
23	—	—	—	—
24	—	—	—	—
25	— Reserved	—	—	—
26	—	—	—	—
27	—	—	—	—

* External address.
** R: Read-only register, W: Write-only register, R/W: Read/Write register.
*** When empty bit is in the register, it is set to "1".
**** Register for test. Don't access this register.

www.chipdocs.com Be sure to visit ChipDocs web site for more information.

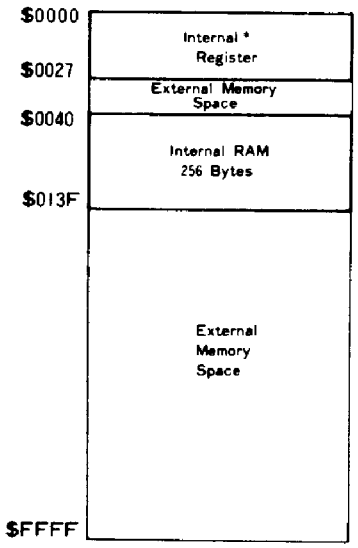

Figure 20 HD6303Y Memory Map

■ TIMER 1

The HD6303Y provides a 16-bit programmable timer which can simultaneously measure an input waveform and generate two independent output waveforms. The pulse widths of both input/output waveforms vary from microseconds to seconds.

Timer 1 is configured as follows (refer to Fig. 22).

- Control/Status Register 1 (8 bit)
- Control/Status Register 2 (7 bit)
- Free Running Counter (16 bit)
- Output Compare Register 1 (16 bit)
- Output Compare Register 2 (16 bit)
- Input Capture Register (16 bit)

• Free-Running Counter (FRC) ($0009:000A)

The key timer element is a 16-bit free-running counter driven and incremented by system clock. The counter value is readable by software without affecting the counter. The counter is cleared during reset.

When writing to the upper byte ($09), the CPU writes the preset value ($FFF8) into the counter (address $09, $0A) regardless of the write data value. But when writing to the lower byte ($0A) after the upper byte writing, the CPU writes not only lower byte data into lower 8 bit, but also upper byte data into higher 8 bit of the FRC.

The counter will be as follows when the CPU writes to it by double store instructions (STD, STX, etc.)

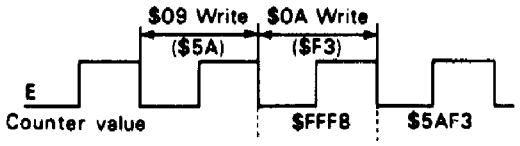

In the case of the CPU write ($5AF3) to the FRC

Figure 21 Counter Write Timing

• Output Compare Register (OCR) ($000B, $000C; OCR1) ($0019, $001A; OCR2)

The output compare register is a 16-bit read/write register which can control an output waveform. The data of OCR is always compared with the FRC.

When the data matches, output compare flag (OCF) in the timer control/status register (TCSR) is set. If an output enable bit (OE) in the TCSR2 is "1", an output level bit(OLVL) in the TCSR will be output to bit 1 (OCR 1) and bit 5 (OCR 2) of port 2. To control the output level again by the next compare, the value of OCR and OLVL should be changed. The OCR is set to $FFFF at reset. The compare function is inhibited for a cycle just after a write to the upper byte of the OCR or FRC. This is to set the 16-bit value valid in the counter register for compare. In addition, it is because counter is to set $FFF8 at the next cycle of the CPU's upper byte write to the FRC.

* For data write to the FRC or the OCR, 2-byte transfer instruction (such as STX, etc.) should be used.

• Input Capture Register (ICR) ($000D : 000E)

The input capture register is a 16-bit read-only register which stores the FRC's value when external input signal transition generates an input capture pulse. Such transition is controled by input edge bit (IEDG) in the TCSR1.

In order to input the external input signal to the edge detector, a bit of the DDR corresponding to bit 0 of port 2 should be cleared ("0"). When an input capture pulse occurs by external input signal transition at the next cycle of CPU's high-byte read of the ICR, the input capture pulse will be delayed by one cycle. In order to ensure the input capture operation, a CPU read of the ICR needs 2-byte transfer instruction. The input pulse width should be at least 2 system cycles. This register is cleared ($0000) during reset.

• Timer Control/Status Register 1 (TCSR1) ($0008)

The timer control/status register 1 is an 8-bit register. All bits are readable and the lower 5 bits are also writable. The upper 3 bits are read-only which indicate the following timer status.

Bit 5 The counter value reached to $0000 as a result of counting-up (TOF).

Bit 6 A match has occurred between the FRC and the OCR 1 (OCF1).

Bit 7 Defined transition of the timer input signal causes the counter to transfer its data to the ICR (ICF).

The followings are the each bit descriptions.

Timer Control/Status Register 1

7	6	5	4	3	2	1	0	
ICF	OCF1	TOF	EICI	EOCI1	ETOI	IEDG	OLVL1	$0008

Bit 0 OLVL1 Output Level 1

OLVL1 is transferred to port 2, bit 1 when a match occurs between the counter and the OCR1. If bit 0 of the TCSR2 (OE1), is set to "1", OLVL1 will appear at bit 1 of port 2.

Bit 1 IEDG Input Edge

This bit determines which edge, rising or falling, of input signal of bit 0 of port 2 will trigger data transfer from the counter to the ICR. For this function, the DDR corresponding to port 2, bit 0 should be cleared beforehand.

IEDG=0, triggered on a falling edge ("High" to "Low")

IEDG=1, triggered on a rising edge ("Low" to "High")

Bit 2 ETOI Enable Timer Overflow Interrupt

When this bit is set, an internal interrupt (IRQ_2) by TOI interrupt is enabled. When cleared, the interrupt is inhibited.

Bit 3 EOCI1 Enable Output Compare Interrupt 1

www.chipdocs.com Be sure to visit ChipDocs web site for more information.

When this bit is set, an internal interrupt (IRQ_3) by OCI1 interrupt is enabled. When cleared, the interrupt is inhibited.

Bit 4 EICI Enable Input Capture Interrupt

When this bit is set, an internal interrupt (IRQ_3) by ICI interrupt is enabled. When cleared, the interrupt is inhibited.

Bit 5 TOF Timer Overflow Flag

This read-only bit is set when the counter increments from $FFFF by 1. Cleared when the counter's MSB byte ($0009) is read by the CPU after the TCSR1 read at TOF=1.

Bit 6 OCF1 Output Compare Flag 1

This read-only bit is set when a match occurs between the OCR1 and the FRC. Cleared when writing to the OCR1 ($000B or $000C) after the TCSR1 or TCSR2 read at OCF=1.

Bit 7 ICF Input Capture Flag

This read-only bit is set when an input signal of port 2, bit 0 makes a transition as defined by IEDG and the FRC is transferred to the ICR. Cleared when reading the upper byte ($000D) of the ICR after the TCSR1 or TCSR2 read at ICF=1.

- **Timer Control/Status Register 2 (TCSR2) ($000F)**

The timer control/status register 2 is a 7-bit register. All bits are readable and the lower 4 bits are also writable. But the upper 3 bits are read-only which indicate the following timer status.

Bit 5 A match has occurred between the FRC and the OCR2 (OCF2).

Bit 6

Timer Control/Status Register 2

7	6	5	4	3	2	1	0	
ICF	OCF1	OCF2	–	EOCI2	OLVL2	OE2	OE1	$000F

Bit 7 The same status flag as the ICF flag of the TCSR1, bit 7.

The foliowings are the each bit descriptions.

Bit 0 OE1 Output Enable 1

This bit enables the OLVL1 to appear at port 2, bit 1 when a match has occurred between the counter and the output compare register 1. When this bit is cleared, bit 1 of port 2 will be an I/O port. When set, it will be an output of OLVL1 automatically.

Bit 1 OE2 Output Enable 2

This bit enables the OLVL2 to appear at port 2, bit 5 when a match has occurred between the counter and the output compare register 2. When this bit is cleared, port 2, bit 5 will be an I/O port. When set, it will be an output of OLVL2 automatically.

Bit 2 OLVL2 Output Level 2

OLVL2 is transferred to port 2, bit 5 when a match has occurred between the counter and the OCR2. If bit 5 of the TCSR2 (OE2), is set to "1", OLVL2 will appear at port 2, bit 5.

Bit 3 EOCI2 Enable Output Compare Interrupt 2

When this bit is set, an internal interrupt (IRQ_3) by OCI2 interrupt is enabled. When cleared, the interrupt is inhibited.

Bit 4 Not used

Bit 5 OCF2 Output Compare Flag 2

This read-only bit is set when a match has occurred between the counter and the OCR2. Cleared when writing to the OCR2 ($0019 or $001A) after the TCSR2 read at OCF2=1.

Bit 6 OCF1 Output Compare Flag 1

Bit 7 ICF Input Capture Flag

OCF1 and ICF are dual addressed. If which register, TCSR1 or TCSR2, CPU reads, it can read OCF1 and ICF to bit 6 and bit 7.

Both the TCSR1 and TCSR2 will be cleared during reset.

(Note) If OE1 or OE2 is set to "1" before the first output compare match occurs after reset restart, bit 1 or bit 5 of port 2 will produce "0" respectively.

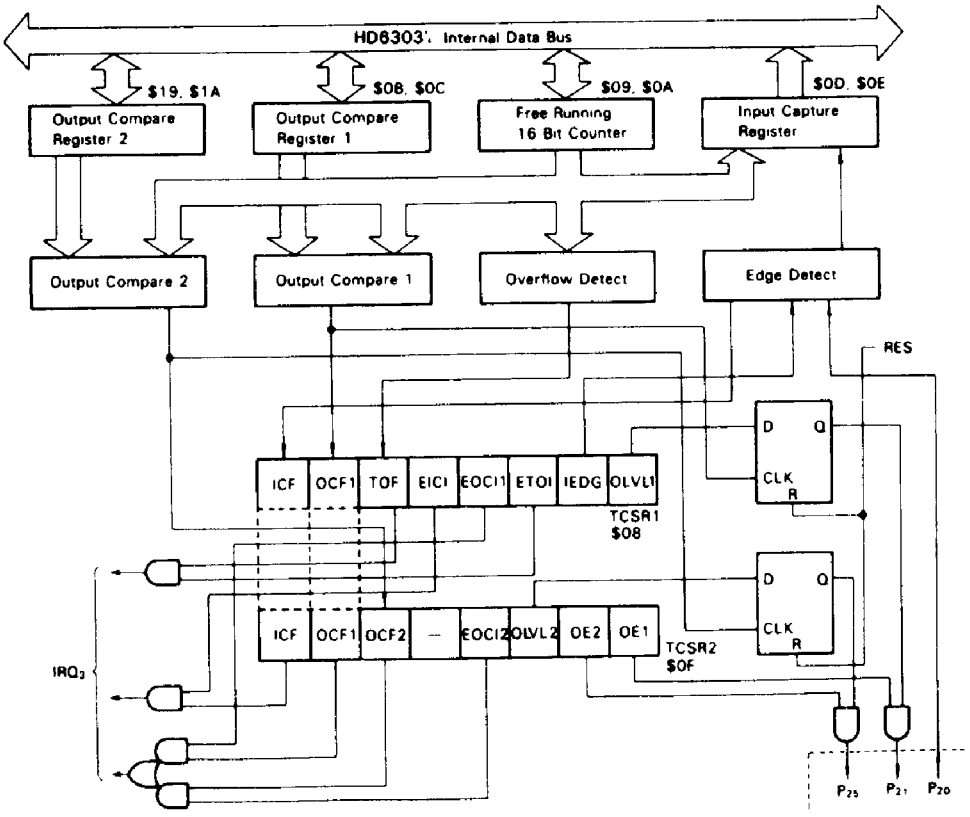

Figure 22 Timer 1 Block Diagram

www.chipdocs.com Be sure to visit ChipDocs web site for more information.

• TIMER 2

In addition to the timer 1, the HD6303Y provides an 8-bit reloadable timer, which is capable of counting the external event. The timer 2 contains a timer output, so the MPU can generate three independent waveforms. (Refer to Fig. 23.)

The timer 2 is configured as follows:

- Control/Status Register 3 (7 bits)
- 8-bit Up Counter
- Time Constant Register (8 bits)

• Timer 2 Up Counter (T2CNT) ($001D)

This is an 8-bit up counter which operates with the clock decided by CKS0 and CKS1 of the TCSR3. The CPU can read the value of the counter without affecting the counter. In addition, any value can be written to the counter by software even during counting.

The counter is cleared when a match occurs between the counter and the TCONR or during reset.

If the write operation is made by software to the counter at the cycle of counter clear, it does not reset the counter but put the write data to the counter.

• Time Constant Register (TCONR) ($001C)

The time constant register is an 8-bit write only register. The data of register is always compared with the counter.

When a match has occurred, the counter match flag (CMF) of the timer control status register 3 (TCSR3) is set and the value selected by TOS0 and TOS1 of the TCSR3 will appear at port 2, bit 6. When CMF is set, the counter will be cleared simultaneously and then start counting from $00. This enables regular interrupts and waveform outputs without any software support. The TCONR is set to "$FF" during reset.

• Timer Control/Status Register 3 (TCSR3) ($001B)

The timer control/status register 3 is a 7-bit register. All bits are readable and 6 bits except for CMF can be written.

The followings are each pin descriptions.

Timer Control/Status Register 3

7	6	5	4	3	2	1	0	
CMF	ECMI	–	T2E	TOS1	TOS0	CKS1	CKS0	$001B

Bit 0 CKS0 Input Clock Select 0
Bit 1 CKS1 Input Clock Select 1

Input clock to the counter is selected as shown in Table 5 depending on these two bits. When an external clock is selected, bit 7 of port 2 will be a clock input automatically. Timer 2 detects the rising edge of the external clock and increments the counter. The external clock is countable up to half the frequency of the system clock.

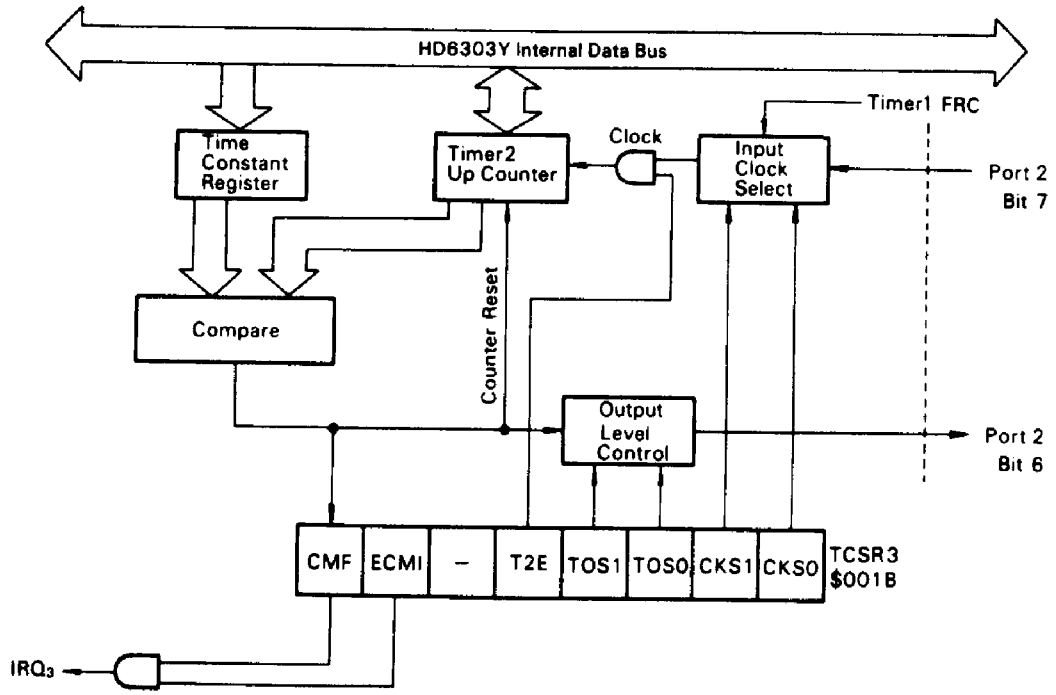

Figure 23 Timer 2 Block Diagram

www.chipdocs.com Be sure to visit ChipDocs web site for more information.

Table 5 Input Clock Select

CKS1	CKS0	Input Clock to the Counter
0	0	E clock
0	1	E clock/8*
1	0	E clock/128*
1	1	External clock

* These clocks come from the FRC of the timer 1. If one of these clocks is selected as an input clock to the up counter, the CPU should not write to the FRC of the timer 1.

Bit 2 TOS0 Timer Output Select 0
Bit 3 TOS1 Timer Output Select 1

When a match occurs between the counter and the TCONR timer 2 outputs shown in Table 6 will appear at port 2, bit 6 depending on these two bits. When both TOS0 and TOS1 are "0", bit 6 of port 2 will be an I/O port.

Table 6 Timer 2 Output Select

TOS1	TOS0	Timer Output
0	0	Timer Output Inhibited
0	1	Toggle Output*
1	0	Output "0"
1	1	Output "1"

* When a match occurs between the counter and the TCONR, timer 2 output level is reversed. This leads to production of a square wave with 50% duty to the external without any software support.

Bit 4 T2E Timer 2 Enable Bit

When this bit is cleared, a clock input to the up counter is inhibited and the up counter stops. When set to "1", a clock selected by CKS1 and CKS0 (Table 5) is input to the up counter.

(Note) P_{26} outputs "0" when T2E bit cleared and timer 2 set in output enable condition by TOS1 or TOS0. It also outputs "0" when T2E bit set "1" and timer 2 set in output enable condition before the first counter match occurs.

Bit 5 Not Used.

Bit 6 ECMI Enable Counter Match Interrupt

When this bit is set, an internal interrupt (IRQ_3) by CMI is enabled. When cleared, the interrupt is inhibited.

Bit 7 CMF Counter Match Flag

This read-only bit is set when a match occurs between the up counter and the TCONR. Cleared by writing "0" at CMF=1 by software (unable to write "1" by software).

Each bit of the TCSR3 is cleared during reset.

■ SERIAL COMMUNICATION INTERFACE (SCI)

The Serial Communication Interface (SCI) in the HD6303Y contains the following two operating modes: asynchronous mode by the NRZ format, and clocked synchronous mode which transfers data synchronously with the clock. In the asynchronous mode, data length, parity bits and number of stop bits can be selected, and eight transfer formats are provided.

The SCI consists of the following registers as shown in Fig. 24 Block Diagram.

- Transmit/Receive Control Status Register 1 (TRCSR1)
- Rate/Mode Control Register (RMCR)
- Transmit/Receive Control Status Register 2 (TRCSR2)
- Receive Data Register (RDR)
- Recevie Shift Register
- Transmit Data Register (TDR)
- Transmit Shift Register

To operate the SCI, initialize the RMCR and TRCSR2, after selecting the desirable operating mode and transfer format. Next, set the enable bit (TE or RE) of the TRCSR1. Operating mode and transfer format should be changed when the enable bit (TE, RE) is cleared. When setting the TE or RE again after changing the operating mode or transfer format, interval of more than a 1-bit cycle of the baud rate or bit rate is necessary. If a 1-bit cycle or more is not allowed, the SCI block may not be initialized.

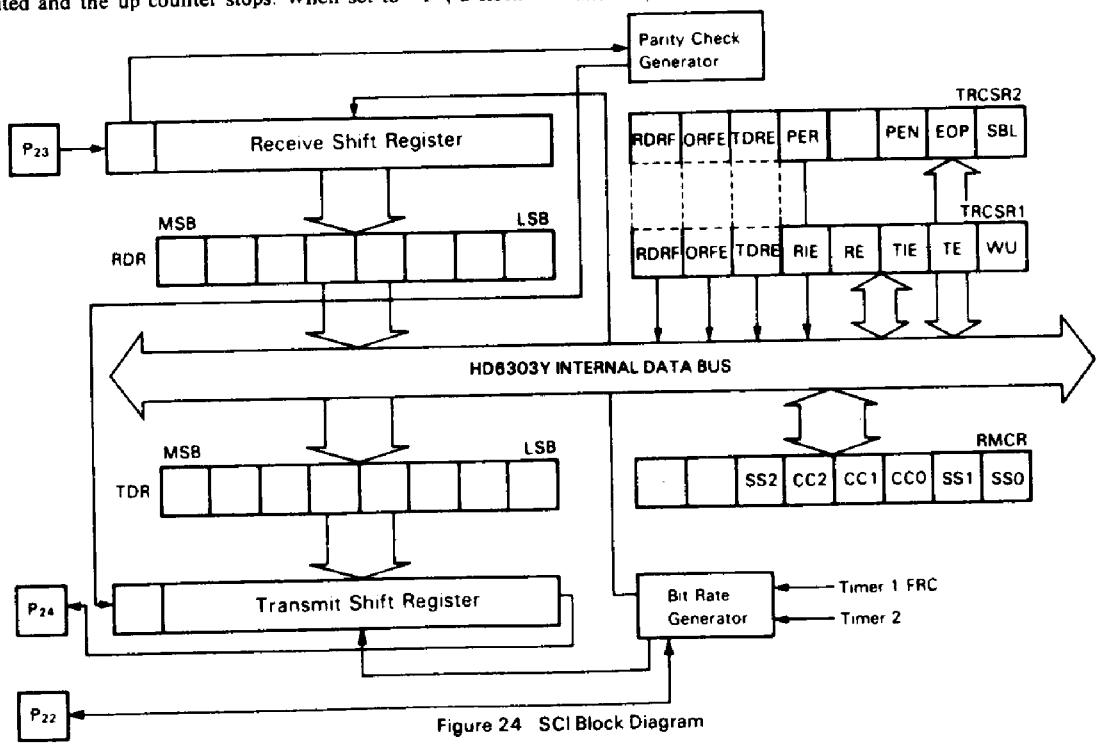

Figure 24 SCI Block Diagram

www.chipdocs.com Be sure to visit ChipDocs web site for more information.

• Asynchronous Mode

Asynchronous mode contains 8 transfer formats as shown in Fig. 25.

Data transmission is enabled by setting TE bit of the TRCSR1, then port 2, bit 4 will unconditionally become a serial output independently of the corresponding DDR.

To transmit data, set the desirable transmit format with RMCR and TRCSR2. When the TE bit is set, the data can be transmitted after transmitting the one frame of preamble ("1").

The conditions at this stage are as follows.

1) If the TDR is empty (TDRE=1), consecutive 1's are produced to indicate the idle state.
2) If the TDR contains data (TDRE=0), data is sent to the Transmit Shift Register and data transmit starts.

During data transmit, a start bit of "0" is transmitted first. Then 7-bit or 8-bit data (starts from bit 0) is transmitted. With PEN=1, the parity bit, even or odd, selected by EOP bit is added, lastly the stop bit (1 bit or 2 bis) is sent.

When the TDR is "empty", hardware sets TDRE flag bit. If the CPU doesn't respond to the flag in proper timing (the TDRE is in set condition till the next normal data transfer starts from the transmit data register to the transmit sift register), "1" is transferred instead of the start bit "0" and continues to be transferred till data is provided to the data register. While the TDRE is "1", "0" is not transferred.

Data receive is possible by setting RE bit. This makes port 2, bit 3 a serial input. The operation mode of data receive is decided by the contents of the TRCSR2 and RMCR at first, and set RE bit of TRCSR1. The first "0" (space) synchronizes the receive bit flow. Each bit of the following data will be strobed in the middle. If a stop bit is not "1", a framing error assumed and ORFE is set.

When a framing error occurs, receive data is transferred to the Receive Data Register and the CPU can read the error-generating data. This makes it possible to detect a line break.

When PEN bit is set, the parity check is done. If the parity bit does not match the EOP bit, a parity error occurs and the PER bit is set, not the RDRF bit. Also, when the parity error occurs the receive data can be read just like in the case of the framing error.

The RDRF flag is set when the data is received without a framing error and a parity error.

If RDRF is still set when receiving the stop bit of the next data, ORFE is set to indicate the overrun generation. CPU can get the receive data by reading RDR. When 7 bit data format is selected, the 8th bit of RDR is "0".

When the CPU read the receive Data Register as a response to RDRF flag or ORFE flag after having read TRCSR, RDRF or ORFE is cleared.

(Note) Clock Source in Asynchronous Mode

If CC1:CC0=10, the internal bit rate clock is provided at P_{22} regardless of the values for TE or RE. Maximum clock rate is E÷16.

If both CC1 and CC0 are set, an external TTL compatible clock must be connected to P_{22} at sixteen times (16×) the desired bit rate, but not greater than E.

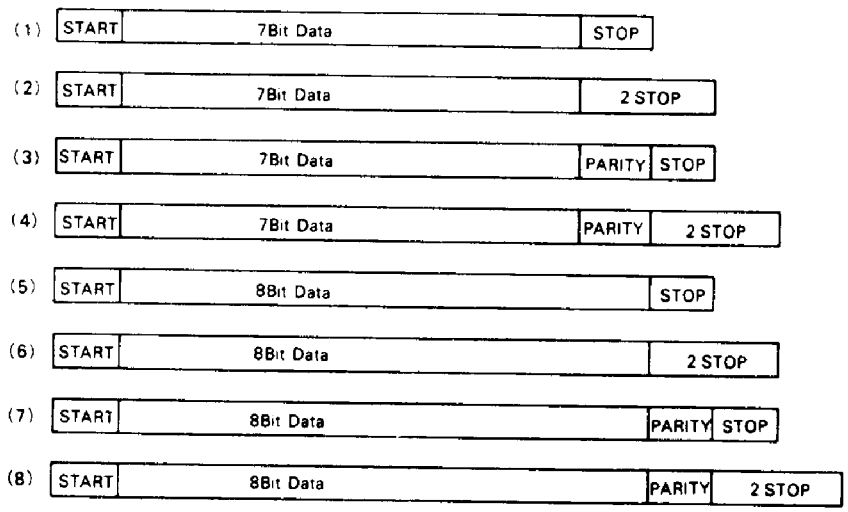

Figure 25 Asynchronous Mode Transfer Format

• Clocked Synchronous Mode

In the clocked synchronous mode, data transmit is synchronized with the clock pulse. The HD6303Y SCI provides functionally independent transmitter and receiver which makes full duplex operation possible in the asynchronous mode. But in the clocked synchronous mode an SCI clock I/O pin is only P_{22}, so the simultaneous receive and transmit operation is not available. In this mode, TE and RE should not be in set condition ("1") simultaneously. Fig. 26 gives a synchronous clock and a data format in the clocked synchronous mode.

1) Data transmit

Data transmit is realized by setting TE bit in the TRCSR1. Port 2, bit 4 becomes an output unconditionally independent of the value of the corresponding DDR.

Both the RMCR and TRCSR should be set in the desirable operating condition for data transmit.

When an external clock input is selected and the TDRE flag is "0", data transmit is performed from port 2, bit 4, synchronizing with 8 clock pulses input from external to port 2, bit 2.

Data is transmitted from bit 0 and the TDRE is set when the Transmit Shift Register (TSR) is "empty". More than 9th clock pulse of external are ignored.

When data transmit is selected to the clock output, the MPU produces transmit data and synchronous clock at TDRE flag clear.

2) Data receive

Data receive is enabled by setting RE bit. Port 2, bit 3 will be a serial input. The operating mode of data receive is decided by the TRCSR1 and the RMCR.

If the external clock input is selected, 8 external clock pulses and the synchronized receive data are input to port 2, bit 2 and bit 3 respectively. The MPU put receive data into the receive data shift register by this clock and set the RDRF flag at the termination of 8 bit

www.chipdocs.com Be sure to visit ChipDocs web site for more information.

data receive. More than 9th clock pulse of external input are ignored. When RDRF is cleared, the MPU starts receiving the next data instantly. So, RDRF should be cleared with P_{22} "High".

When data receive is selected with the clock output, 8 synchronous clocks are output to the external by setting RE bit. So receive data should be input from external synchronously with this clock. When the first byte data is received, the RDRF flag is set. After the second byte, receive operation is performed by sending the synchronous clock to the external after clearing the RDRF bit.

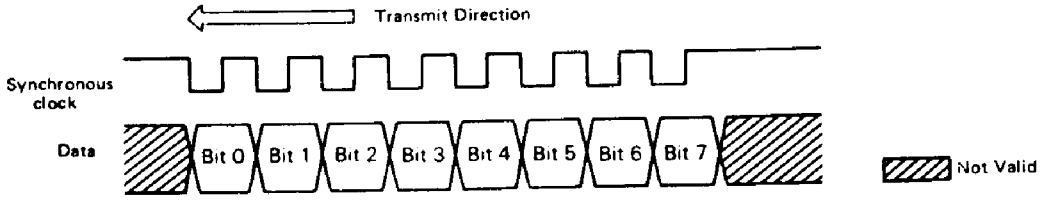

- Transmit data is produced from a falling edge of a synchronous clock to the next falling edge.
- Receive data is latched at the rising edge.

Figure 26 Clocked Synchronous Mode Format

- **Transmit/Receive Control Status Register (TRCSR1) ($0011)**

The TRCSR1 is composed of 8 bits which are all readable. Bits 0 to 4 are also writable. This register is initialized to $20 during reset. Each bit functions are as follows.

Transmit/Receive Control Status Register

7	6	5	4	3	2	1	0	
RDRF	ORFE	TDRE	RIE	RE	TIE	TE	WU	$0011

Bit 0 WU Wake-up

In a typical multi-processor configuration, the software protocol provides the destination address at the first byte of the message. In order to make uninterested MPU ignore the remaining message, a wake-up function is available. By this, uninterested MPU can inhibit all further receive processing till the next message starts.

Then wake-up function is triggered by consecutive 1's with 1 frame length. The software protocol should provide the idle time between messages.

By setting this bit, the MPU stops data receive till the next message. The receive of consecutive "1" with one frame length wakes up and clears this bit by hardware and then the MPU restarts receive operation. However, the RE flag should be already set before setting this bit. In the clocked synchronous mode WU is not available, so this bit should not be set.

Bit 1 TE Transmit Enable

When this bit is set, transmit data will appear at port 2, bit 4 after one frame preamble in asynchronous mode, while in clocked synchronous mode it appears immediately. This is executed regardless of the value of the corresponding DDR. When TE is cleared, the serial I/O doesn't affect port 2, bit 4.

Bit 2 TIE Transmit Interrupt Enable

When this bit is set, an internal interrupt (IRQ_3) is enabled when TDRE (bit 5) is set. When cleared, the interrupt is inhibited.

Bit 3 RE Receive Enable

When set, a signal is input to the receiver from port 2, bit 3 regardless of the value of the DDR. When RE is cleared, the serial I/O doesn't affect port 2, bit 3.

Bit 4 RIE Receive Interrupt Enable

When this bit is set, an internal interrupt (IRQ_3) is enabled when RDRF (bit 7) or ORFE (bit 6) is set. When cleared, the interrupt is inhibited.

Bit 5 TDRE Transmit Data Register Empty

TDRE is set by hardware when the TDR is transferred to the Transmit Shift Register in the asynchronous mode, while in clocked synchronous mode when the TDSR is "empty". This bit is cleared by reading the TRCSR1 or TRCSR2 and writing new transmit data to the TDR when TDRE=1 TDRE is set to "1" during reset.

Bit 6 ORFE Overrun Framing Error

ORFE is set by hardware when an overrun or a framing error is generated (during data-receive only). An overrun error occurs when new receive data is ready to be transferred to the RDR during RDRF still being set. A framing error occurs when a stop bit is "0". But in clocked synchronous mode, this bit is not affected. This bit is cleared by reading the TRCSR1 or TRCSR2, and the RDR, when RDRF=1. ORFE is cleared during reset.

Bit 7 RDRF Receive Data Register Full

RDRF is set by hardware when data is received normally and transferred from the Receive Shift Register (RSR) to the RDR. This bit is cleared by reading TRCSR1 or TRCSR2, and the RDR, when RDRF=1. This bit is cleared during reset.

- **Transmit Rate/Mode Control Register (RMCR)**

The RMCR controls the following serial I/O:

- Baud Rate
- Data Format
- Clock source
- Port 2, Bit 2 Function
- Operation Mode

All bits are readable/writable. Bit 0 to 5 of the RMCR are cleared during reset.

Transfer Rate/Mode Control Register

7	6	5	4	3	2	1	0	
–	–	SS2	CC2	CC1	CC0	SS1	SS0	$0010

Bit 0 SS0
Bit 1 SS1 Speed Select
Bit 5 SS2

These bits control the baud rate used for the SCI. Table 7 lists the available baud rates. The timer 1 FRC (SS2=0) and the timer 2 up counter (SS2=1) provide the internal clock to the SCI. When selecting the timer 2 as a baud rate clock source, it functions as a baud rate generator. The timer 2 generates the baud rate listed in Table 8 depending on the value of the TCONR.

(Note) When operating the SCI with internal clock, do not perform write operation to the timer/counter which is the

www.chipdocs.com Be sure to visit ChipDocs web site for more information.

Table 7 SCI Bit Times and Transfer Rates

(1) Asynchronous Mode

SS2	SS1	SS0	XTAL	2.4576MHz	4.0MHz	4.9152MHz
			E	614.4kHz	1.0MHz	1.2288MHz
0	0	0	E÷16	26 μs/38400Baud	16μs/62500Baud	13μs/76800Baud
0	0	1	E÷128	208μs/4800Baud	128μs/7812.5Baud	104.2μs/9600Baud
0	1	0	E÷1024	1.67ms/600Baud	1.024ms/976.6Baud	833.3μs/1200Baud
0	1	1	E÷4096	6.67ms/150Baud	4.096ms/244.1Baud	3.333ms/300Baud
1	—	—	—	*	*	*

* When SS2 is "1", Timer 2 provides SCI clocks. The baud rate is shown as follows with the TCONR as N.

$$\text{Baud Rate} = \frac{f}{32(N+1)} \qquad \left(\begin{array}{l} f: \text{input clock frequency to the timer 2 counter} \\ N = 0 \sim 255 \end{array}\right)$$

(2) Clocked Synchronous Mode*

SS2	SS1	SS0	XTAL	4.0 MHz	6.0 MHz	8.0 MHz	12.0 MHz
			E	1.0 MHz	1.5 MHz	2.0 MHz	3.0 MHz
0	0	0	E ÷ 2	2 μs/bit	1.33 μs/bit	1 μs/bit	0.667 μs/bit
0	0	1	E ÷ 16	16 μs/bit	10.7 μs/bit	8 μs/bit	5.33 μs/bit
0	1	0	E ÷ 128	128 μs/bit	85.3 μs/bit	64 μs/bit	42.7 μs/bit
0	1	1	E ÷ 512	512 μs/bit	341 μs/bit	256 μs/bit	171 μs/bit
1	—	—	—	**	**	**	**

*Bit rates in the case of internal clock operation. In the case of external clock operation, the external clock is operatable up to DC ~ 1/2 system clock.

** The bit rate is shown as follows with the TCONR as N.

$$\text{Bit Rate } (\mu s/\text{bit}) = \frac{4(N+1)}{f} \qquad \left(\begin{array}{l} f: \text{input clock frequency to the timer 2 counter} \\ N = 0 \sim 255 \end{array}\right)$$

Table 8 Baud Rate and Time Constant Register Example

Baud Rate (Baud) \ XTAL	2.4576MHz	3.6864MHz	4.0MHz	4.9152MHz	8.0MHz
110	21*	32*	35*	43*	70*
150	127	191	207	255	51*
300	63	95	103	127	207
600	31	47	51	63	103
1200	15	23	25	31	51
2400	7	11	12	15	25
4800	3	5	—	7	12
9600	1	2	—	3	—
19200	0	—	—	1	—
38400	—	—	—	0	—

* E/8 clock is input to the timer 2 up counter and E clock otherwise.

Table 9 SCI Format and Clock Source Control

CC2	CC1	CC0	Format	Mode	Clock Source	Port 2, Bit 2	Port 2, Bit 3	Port 2, Bit 4
0	0	0	8-bit data	Clocked Synchronous	External	Input	When the TRCSR1, RE bit is "1", bit 3 is used as a serial input.	
0	0	1	8-bit data	Asynchronous	Internal	Not Used**		
0	1	0	8-bit data	Asynchronous	Internal	Output*		
0	1	1	8-bit data	Asynchronous	External	Input		
1	0	0	8-bit data	Clocked Synchronous	Internal	Output		When the TRCSR1, TE bit is "1", bit 4 is used as a serial output.
1	0	1	7-bit data	Asynchronous	Internal	Not Used**		
1	1	0	7-bit data	Asynchronous	Internal	Output*		
1	1	1	7-bit data	Asynchronous	External	Input		

* Clock output regardless of the TRCSR1, bit RE and TE.
** Not used for the SCI.

www.chipdocs.com Be sure to visit ChipDocs web site for more information.

clock source of the SCI.

Bit 2 **CC0**
Bit 3 **CC1** Clock Control/Format Select*
Bit 4 **CC2**

These bits control the data format and the clock source (refer to Table 9).

* CC0, CC1 and CC2 are cleared during reset and the MPU goes to the clocked synchronous mode of the external clock operation. Then the MPU automatically set port 2, bit 2 into the clock input state. When using port 2, bit 2 as an output port, the DDR of port 2 should be set to "1" and CC1 and CC0 to "0" and "1" respectively.

Bit 6 Not Used.
Bit 7 Not Used

• Transmit/Receive Control Status Register 2 (TRCSR2)

The TRCSR2 is a 7-bit register which can select a data format in the asynchronous mode. The upper 3 bits are the same address as the TRCSR1. Therefore, the RDRF, ORFE and TDRE can be read by either the TRCSR1 or TRCSR2. Bits 0 to 2 of the TRCSR2 are used for read/write. Bits 4 to 7 are used only for read.

Transmit/Receive Control Status Register 2

7	6	5	4	3	2	1	0	
RDRF	ORFE	TDRE	PER	–	PEN	EOP	SBL	$001E

Bit 0 **SBL Stop Bit Length**
This bit selects the stop bit length in the asynchronous mode.
If this bit is "0", the stop bit is 1-bit. If "1", the stop bit is 2-bit. This bit is cleared during reset.

Bit 1 **EOP Even/Odd Parity**
This bit selects the parity generated and checked when the PEN is "1". If this bit is "0", the parity is even. If "1", it is odd. This bit is cleared during reset.

Bit 2 **PEN Parity Enable**
This bit decides whether the parity bit should be generated and checked in the asynchronous mode or not. If this bit is "0", the parity bit is neither generated nor checked. If "1", it is generated and checked. This bit is cleared during reset.
The 3 bits above do not affect the SCI opertion in the clocked synchronous mode.

Bit 3 Not Used

Bit 4 **PER Parity Error**
This bit is set when the PEN is "1" and a parity error occurs. It is cleared by reading the RDR after reading the TRCSR2, when PER = 1.

Bit 5 **TDRE**
Transmit Data Register Empty

Bit 6 **ORFE**
Overrun/Framing Error

Bit 7 **RDRF**
Receive Data Register Full

* Each flag of the TDRE, ORFE, and RDRF can be read from either the TRCSR1 or TRCSR2.

2

■ PRECAUTION 1

In the synchronous clocked receive operation with clock-output, there are three cases for clock pulse timing after RDRF clear as shown below.

Please consider above in designing system, since transmitting receiving time is not uniform.

The clock-output of case 1 or case 2 is determined by "1" or "0" of SCI internal operation clock of RDRF clearing cycle. In addition, in the case of low voltage operation (V_{CC} < 4.5V), the clock-output of case 1 may transfer to case 3.

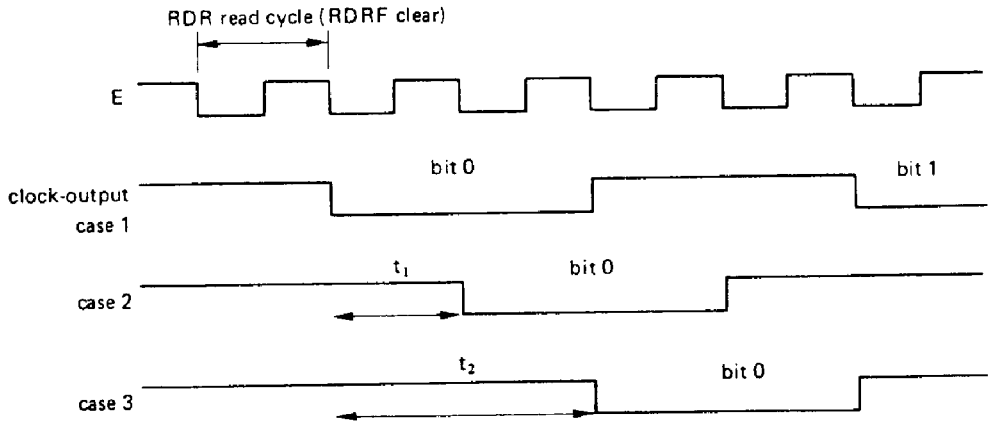

(note) When bit rate is E/2, t_1 = E, and t_2 = 2E.
E/16, t_1 = 8E, t_2 = 16E.
E/128, t_1 = 64E, t_2 = 128E.
E/512, t_1 = 256E, t_2 = 512E.

Diagram for Precaution 1

www.chipdocs.com Be sure to visit ChipDocs web site for more information.

■ PRECAUTION 2

When transmitting through clock-synchronous serial communication interface, TE bit should not be cleared with TDRE of TRCSR ($11) is "0".

The TDRE set and clear conditions of SCI are shown as follows.

	Set condition	Clear condition
TDRE	1. TDR → transmit shift register (asynchronous) 2. Transmit shift register is empty. (clock-synchronous) 3. $\overline{RES}$ = 0	When writing to TDR after TRSCR read, with TDRE = 1, TDRE is cleared.

If transmit data is written to TDR, and then TE bit is cleared with TDRE = 0 to stop transmitting, TDRE remains "0".

In this case, even if TE bit is set and transmit data is written again, the TDR data is not transmitted.

Please note that TE bit must be cleared after the last data has been transmitted.

(This caution is not applied to asynchronous serial communication interface.)

■ TIMER, SCI STATUS FLAG

Table 10 shows the set and reset conditions of each status flag in the timer 1, timer 2 and SCI.

Table 10 Timer 1, Timer 2 and SCI Status Flag

		Set Condition	Clear Condition
P6CSR	IS FLAG	Falling edge input to P_{54} ($\overline{IS}$)	1. Read the P6CSR then read or write the PORT6, when IS FLAG = 1 2. $\overline{RES}$ = 0
Timer 1	ICF	FRC → ICR by Rising or Falling edge input to P_{20} (Selecting with the IEDG bit)	1. Read the TCSR1 or TCSR2 then ICRH, when ICF = 1 2. $\overline{RES}$ = 0
	OCF1	OCR1 = FRC	1. Read the TCSR1 or TCSR2 then write to the OCR1H or OCR1L, when OCF1 = 1 2. $\overline{RES}$ = 0
	OCF2	OCR2 = FRC	1. Read the TCSR2 then write to the OCR2H or OCR2L, when OCF2 = 1 2. $\overline{RES}$ = 0
	TOF	FRC = $FFFF + 1 cycle	1. Read the TCSR1 then FRCH, when TOF = 1 2. $\overline{RES}$ = 0
Timer 2	CMF	T2CNT = TCONR	1. Write "0" to CMF, when CMF = 1 2. $\overline{RES}$ = 0
SCI	RDRF	Receive Shift Register → RDR	1. Read the TRCSR1 or TRCSR2 then RDR, when RDRF = 1 2. $\overline{RES}$ = 0
	ORFE	1. Framing Error (Asynchronous Mode) Stop Bit = 0 2. Overrun Error (Asynchronous Mode) Receive Shift Register → RDR when RDRF = 1	1. Read the TRCSR1 or TRCSR2 then RDR, when ORFE = 1 2. $\overline{RES}$ = 0
	TDRE	1. Asynchronous Mode TDR → Transmit Shift Register 2. Clocked Synchronous Mode Transmit Shift Register is "empty" 3. $\overline{RES}$ = 0	Read the TRCSR1 or TRCSR2 then write to the TDR, when TDRE = 1
	PER	Parity when PEN= 1	1. Read the TRCSR2 then RDR, when PER= 1 2. $\overline{RES}$=0

(Note) → ; Transfer = ; equal

ICRH; Upper byte of ICR
OCR1H; Upper byte of OCR1
OCR2H; Upper byte of OCR2

OCR1L; Lower byte of OCR1
OCR2L; Lower byte of OCR2
FRCH; Upper byte of FRC

www.chipdocs.com Be sure to visit ChipDocs web site for more information.

■ LOW POWER DISSIPATION MODE

The HD6303Y provides two low power dissipation modes; sleep and standby.

• Sleep Mode

The MPU goes to the sleep mode by SLP instruction execution. In the sleep mode, the CPU stops its operation, while the registers' contents are retained. In this mode, the peripherals except the CPU such as timers, SCI, etc. continue their functions. The power dissipation of sleep-condition is one fourth that of operating condition.

The MPU returns from this mode by an interrupt, $\overline{RES}$ or $\overline{STBY}$; it goes to the reset state by $\overline{RES}$ and the standby mode by $\overline{STBY}$. When the CPU acknowledges an interrupt request, it cancels the sleep mode, returns to the operation mode and branches to the interrupt routine. When the CPU masks this interrupt, it cancels the sleep mode and executes the next instruction. However, for example, if the timer 1 or 2 prohibits a timer interrupt, the CPU doesn't cancel the sleep mode because of no interrupt request.

This sleep mode is effective to reduce the power dissipation for a system with no need of the HD6303Y's consecutive operation.

• Standby Mode

The MPU goes to the standby mode with the $\overline{STBY}$ "Low" or by clearing the STBY flag. In this mode, the HD6303Y stops all the clocks and goes to the reset state. In this mode, the power dissipation is reduced to several μA. During standby, all pins, except the power supply (V_{CC}, V_{SS}), the $\overline{STBY}$, $\overline{RES}$ and XTAL (which outputs "0"), go to the high impedance state. In this mode, power (V_{CC}) is supplied to the HD6303Y, and the contents of RAM is retained. The MPU returns from this mode during reset. When the MPU goes to the standby mode with $\overline{STBY}$ "Low", it will restart at the timing shown in Fig. 27(a). When the MPU goes to the standby mode by clearing the STBY flag, it will restart only by keeping the $\overline{RES}$ "Low" for longer than the oscillating stabilization time. (Fig. 27(b))

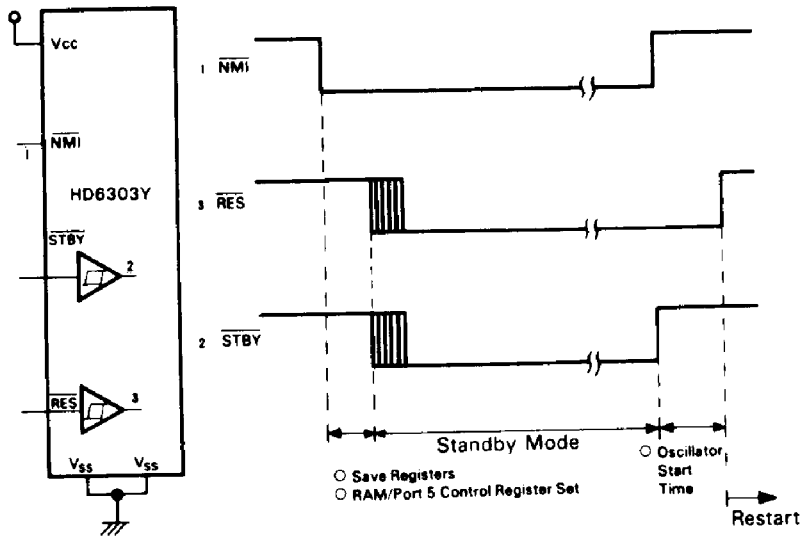

(a) Standby Mode by $\overline{STBY}$

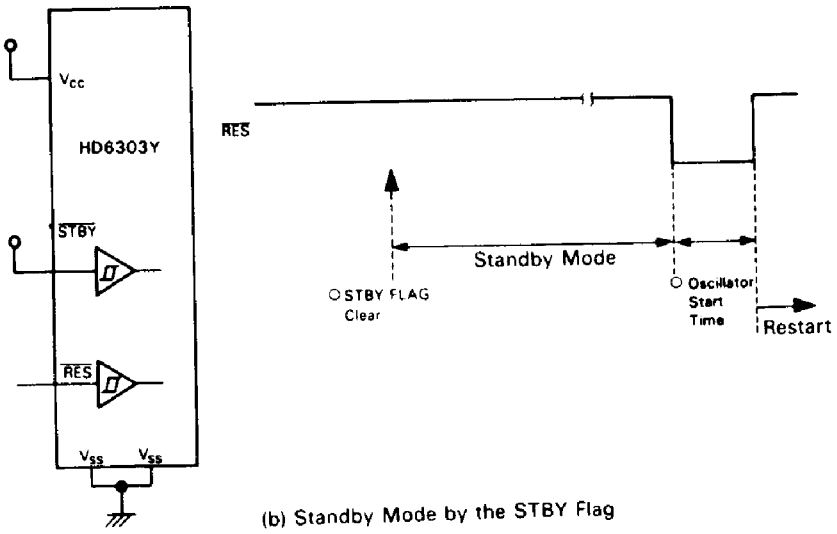

(b) Standby Mode by the STBY Flag

Figure 27 Standby Mode Timing

www.chipdocs.com Be sure to visit ChipDocs web site for more information.

■ TRAP FUNCTION

The CPU generates an interrupt with the highest priority (TRAP) when fetching an undefined instruction or an instruction from non-memory space. The TRAP prevents the system-burst caused by noise or a program error.

• Op Code Error

When fetching an undefined op code, the CPU saves registers as well as a normal interrupt and branches to the TRAP ($FFEE, $FFEF). This has the priority next to reset.

• Address Error

When an instruction fetch is made from the address of internal register, the MPU generaters an interrupt as well as an op code error. But on the system with no memory in its external memory area, this function is not applicable if an instruction fetch is made from the external non-memory area. Addresses where an address error occurs are from $0000 to $0027.

This function is available only for an instruction fetch and is not applicable to the access of normal data read/write.

(Note) The TRAP interrupt provides a retry function differently from other interrupts. This is a program flow return to the address where the TRAP occurs when a sequence returns to a main routine from the TRAP interrupt routine by RTI. The retry can prevent the system burst caused by noise, etc.

However, if another TRAP occurs, the program repeats the TRAP interrupt forever, so the consideration is necessary in programming.

■ INSTRUCTION SET

The HD6303Y provides object code upward compatible with the HD6801 to utilize all instruction set of the HMCS6800. It also reduces the execution times of key instructions for throughput improvement.

Bit manipulation instruction, change instruction of the index register and accumulator and sleep instruction are also added.

The followings are explained here.

- CPU Programming Model (refer to Fig. 28)
- Addressing Mode
- Accumulator and Memory Manipulation Instruction (refer to Table 11)
- New Instruction
- Index Register and Stack Manipulation Instruction (refer to Table 12)
- Jump and Branch Instruction (refer to Table 13)
- Condition Code Register Manipulation (refer to Table 14)
- Op Code Map (refer to Table 15)

• Programming Model

Fig. 28 depicts the HD6303Y programming model. The double accumulator D consists of accumulator A and B, so when using the accumulator D, the contents of A and B are destroyed.

• CPU Addressing Mode

The HD6303Y provides 7 addressing modes. The addressing mode is determined by an instruction type and code. Tables 11 through 15 show addressing modes of each instruction with the execution times counted by the machine cycle.

When the clock frequency is 4MHz, the machine cycle time becomes microseconds directly.

Accumulator (ACCX) Addressing

Only an accumulator is addressed and the accumulator A or B is selected. This is a one-byte instruction.

Immediate Addressing

This addressing locates a data in the second byte of an instruction. However, LDS and LDX locate a data in the second and third byte exceptionally. This addressing is a 2 or 3-byte instruction.

Direct Addressing

In this addressing mode, the second byte of an instruction shows

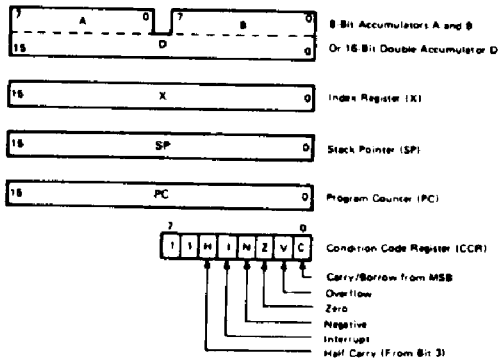

Figure 28 CPU Programming Model

the address where a data is stored. 256 bytes ($0 through $255) can be addressed directly. Execution times can be reduced by storing data in this area so it is recommended to make it RAM for users' data area in configurating a system. This is a 2-byte instruction, while 3 byte with regard to AIM, OIM, EIM and TIM.

Extended Addressing

In this mode, the second byte shows the upper 8 bit of the data stored address and the third byte the lower 8 bit. This indicates the absolute address of 3 byte instruction in the memory.

Indexed Addressing

The second byte of an instruction and the lower 8 bit of the index register are added in this mode. As for AIM, OIM, EIM and TIM, the third byte of an instruction and the lower 8 bits of the index register are added.

This carry is added to the upper 8 bit of the index register and the result is used for addressing the memory. The modified address is retained in the temporary address register, so the contents of the index register doesn't change. This is a 2-byte instruction except AIM, OIM, EIM and TIM (3-byte instruction).

Implied Addressing

An instruction itself specifies the address. This is, the instruction addresses a stack pointer, index register, etc. This is a one-byte instruction.

Relative Addressing

The second byte of an instruction and the lower 8 bits of the program counter are added. The carry or borrow is added to the upper 8 bit. So addressing from −126 to +129 byte of the current instruction is enabled. This is a 2-byte instruction.

(Note) CLI, SEI Instructions and Interrupt Operation

When accepting the IRQ at a preset timing with CLI and SEI instructions, more than 2 cycles are necessary between the CLI and SEI instructions. For example, the following program (a)(b) don't accept the IRQ but (c) accepts it.

```
                                  .
                                  .
                                  .
                                  .
                                 CLI
CLI                 CLI          NOP
SEI                 NOP          NOP
 .                  SEI          SEI
 .                   .            .
 .                   .            .
 .                   .            .
 .                   .            .
(a)                 (b)          (c)
```

The same thing can be said to the TAP instruction instead of the CLI and SEI instructions.

www.chipdocs.com Be sure to visit ChipDocs web site for more information.

Table 11 Accumulator, Memory Manipulation Instructions

Operations	Mnemonic	Addressing Modes															Boolean/ Arithmetic Operation	Condition Code Register					
		IMMED			DIRECT			INDEX			EXTEND			IMPLIED				5	4	3	2	1	0
		OP	~	#	OP	~	#	OP	~	#	OP	~	#	OP	~	#		H	I	N	Z	V	C
Add	ADDA	8B	2	2	9B	3	2	AB	4	2	BB	4	3				A + M → A	↕	•	↕	↕	↕	↕
	ADDB	CB	2	2	DB	3	2	EB	4	2	FB	4	3				B + M → B	↕	•	↕	↕	↕	↕
Add Double	ADDD	C3	3	3	D3	4	2	E3	5	2	F3	5	3				A B + M M + 1 → A B	•	•	↕	↕	↕	↕
Add Accumulators	ABA													1B	1	1	A + B → A	↕	•	↕	↕	↕	↕
Add With Carry	ADCA	89	2	2	99	3	2	A9	4	2	B9	4	3				A + M + C → A	↕	•	↕	↕	↕	↕
	ADCB	C9	2	2	D9	3	2	E9	4	2	F9	4	3				B + M + C → B	↕	•	↕	↕	↕	↕
AND	ANDA	84	2	2	94	3	2	A4	4	2	B4	4	3				A·M → A	•	•	↕	↕	R	•
	ANDB	C4	2	2	D4	3	2	E4	4	2	F4	4	3				B·M → B	•	•	↕	↕	R	•
Bit Test	BIT A	85	2	2	95	3	2	A5	4	2	B5	4	3				A·M	•	•	↕	↕	R	•
	BIT B	C5	2	2	D5	3	2	E5	4	2	F5	4	3				B·M	•	•	↕	↕	R	•
Clear	CLR							6F	5	2	7F	5	3				00 → M	•	•	R	S	R	R
	CLRA													4F	1	1	00 → A	•	•	R	S	R	R
	CLRB													5F	1	1	00 → B	•	•	R	S	R	R
Compare	CMPA	81	2	2	91	3	2	A1	4	2	B1	4	3				A - M	•	•	↕	↕	↕	↕
	CMPB	C1	2	2	D1	3	2	E1	4	2	F1	4	3				B - M	•	•	↕	↕	↕	↕
Compare Accumulators	CBA													11	1	1	A - B	•	•	↕	↕	↕	↕
Complement, 1's	COM							63	6	2	73	6	3				M → M	•	•	↕	↕	R	S
	COMA													43	1	1	A → A	•	•	↕	↕	R	S
	COMB													53	1	1	B → B	•	•	↕	↕	R	S
Complement, 2's (Negate)	NEG							60	6	2	70	6	3				00 - M → M	•	•	↕	↕	①	②
	NEGA													40	1	1	00 - A → A	•	•	↕	↕	①	②
	NEGB													50	1	1	00 - B → B	•	•	↕	↕	①	②
Decimal Adjust, A	DAA													19	2	1	Converts binary add of BCD characters into BCD format	•	•	↕	↕	↕	③
Decrement	DEC							6A	6	2	7A	6	3				M - 1 → M	•	•	↕	↕	④	•
	DECA													4A	1	1	A - 1 → A	•	•	↕	↕	④	•
	DECB													5A	1	1	B - 1 → B	•	•	↕	↕	④	•
Exclusive OR	EORA	88	2	2	98	3	2	A8	4	2	B8	4	3				A ⊕ M → A	•	•	↕	↕	R	•
	EORB	C8	2	2	D8	3	2	E8	4	2	F8	4	3				B ⊕ M → B	•	•	↕	↕	R	•
Increment	INC							6C	6	2	7C	6	3				M + 1 → M	•	•	↕	↕	⑤	•
	INCA													4C	1	1	A + 1 → A	•	•	↕	↕	⑤	•
	INCB													5C	1	1	B + 1 → B	•	•	↕	↕	⑤	•
Load Accumulator	LDAA	86	2	2	96	3	2	A6	4	2	B6	4	3				M → A	•	•	↕	↕	R	•
	LDAB	C6	2	2	D6	3	2	E6	4	2	F6	4	3				M → B	•	•	↕	↕	R	•
Load Double Accumulator	LDD	CC	3	3	DC	4	2	EC	5	2	FC	5	3				M + 1 → B, M → A	•	•	↕	↕	R	•
Multiply Unsigned	MUL													3D	7	1	A x B → A B	•	•	•	•	•	⑪
OR, Inclusive	ORAA	8A	2	2	9A	3	2	AA	4	2	BA	4	3				A + M → A	•	•	↕	↕	R	•
	ORAB	CA	2	2	DA	3	2	EA	4	2	FA	4	3				B + M → B	•	•	↕	↕	R	•
Push Data	PSHA													36	4	1	A → Msp, SP - 1 → SP	•	•	•	•	•	•
	PSHB													37	4	1	B → Msp, SP - 1 → SP	•	•	•	•	•	•
Pull Data	PULA													32	3	1	SP + 1 → SP, Msp → A	•	•	•	•	•	•
	PULB													33	3	1	SP + 1 → SP, Msp → B	•	•	•	•	•	•
Rotate Left	ROL							69	6	2	79	6	3				M / A / B 	•	•	↕	↕	⑥	↕
	ROLA													49	1	1		•	•	↕	↕	⑥	↕
	ROLB													59	1	1		•	•	↕	↕	⑥	↕
Rotate Right	ROR							66	6	2	76	6	3				M / A / B 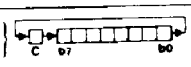	•	•	↕	↕	⑥	↕
	RORA													46	1	1		•	•	↕	↕	⑥	↕
	RORB													56	1	1		•	•	↕	↕	⑥	↕

(Note) Condition Code Register will be explained in Note of Table 14.

(continued)

www.chipdocs.com Be sure to visit ChipDocs web site for more information.

Table 11 Accumulator, Memory Manipulation Instructions

Operations	Mnemonic	IMMED OP	IMMED ~	IMMED #	DIRECT OP	DIRECT ~	DIRECT #	INDEX OP	INDEX ~	INDEX #	EXTEND OP	EXTEND ~	EXTEND #	IMPLIED OP	IMPLIED ~	IMPLIED #	Boolean/ Arithmetic Operation	5 H	4 I	3 N	2 Z	1 V	0 C
Shift Left Arithmetic	ASL							68	6	2	78	6	3				M	•	•	↕	↕	⑥	↕
	ASLA													48	1	1	A	•	•	↕	↕	⑥	↕
	ASLB													58	1	1	B	•	•	↕	↕	⑥	↕
Double Shift Left, Arithmetic	ASLD													05	1	1	C b7 b0 0 / ACC A/ ACC B / C A7 A0 B7 B0 0	•	•	↕	↕	⑥	↕
Shift Right Arithmetic	ASR							67	6	2	77	6	3				M	•	•	↕	↕	⑥	↕
	ASRA													47	1	1	A	•	•	↕	↕	⑥	↕
	ASRB													57	1	1	B b7 b0 C	•	•	↕	↕	⑥	↕
Shift Right Logical	LSR							64	6	2	74	6	3				M	•	•	R	↕	⑥	↕
	LSRA													44	1	1	A 0	•	•	R	↕	⑥	↕
	LSRB													54	1	1	B b7 b0 C	•	•	R	↕	⑥	↕
Double Shift Right Logical	LSRD													04	1	1	0 → ACC A/ ACC B → C A7 A0 B7 B0 C	•	•	R	↕	⑥	↕
Store Accumulator	STAA				97	3	2	A7	4	2	B7	4	3				A → M	•	•	↕	↕	R	•
	STAB				D7	3	2	E7	4	2	F7	4	3				B → M	•	•	↕	↕	R	•
Store Double Accumulator	STD				DD	4	2	ED	5	2	FD	5	3				A → M B → M + 1	•	•	↕	↕	R	•
Subtract	SUBA	80	2	2	90	3	2	A0	4	2	B0	4	3				A - M → A	•	•	↕	↕	↕	↕
	SUBB	C0	2	2	D0	3	2	E0	4	2	F0	4	3				B - M → B	•	•	↕	↕	↕	↕
Double Subtract	SUBD	83	3	3	93	4	2	A3	5	2	B3	5	3				A B - M M + 1 → A B	•	•	↕	↕	↕	↕
Subtract Accumulators	SBA													10	1	1	A - B → A	•	•	↕	↕	↕	↕
Subtract With Carry	SBCA	82	2	2	92	3	2	A2	4	2	B2	4	3				A - M - C → A	•	•	↕	↕	↕	↕
	SBCB	C2	2	2	D2	3	2	E2	4	2	F2	4	3				B - M - C → B	•	•	↕	↕	↕	↕
Transfer Accumulators	TAB													16	1	1	A → B	•	•	↕	↕	R	•
	TBA													17	1	1	B → A	•	•	↕	↕	R	•
Test Zero or Minus	TST							6D	4	2	7D	4	3				M - 00	•	•	↕	↕	R	R
	TSTA													4D	1	1	A - 00	•	•	↕	↕	R	R
	TSTB													5D	1	1	B - 00	•	•	↕	↕	R	R
And Immediate	AIM				71	6	3	61	7	3							M·IMM → M	•	•	↕	↕	R	•
OR Immediate	OIM				72	6	3	62	7	3							M+IMM → M	•	•	↕	↕	R	•
EOR Immediate	EIM				75	6	3	65	7	3							M⊕IMM → M	•	•	↕	↕	R	•
Test Immediate	TIM				7B	4	3	6B	5	3							M·IMM	•	•	↕	↕	R	•

(Note) Condition Code Register will be explained in Note of Table 14.

www.chipdocs.com Be sure to visit ChipDocs web site for more information.

- **Additional Instruction**

In addition to the HD6801 instruction set, the HD6303Y prepares the following new instructions.

AIM ..... (M)·(IMM) → (M)
Executes "AND" operation to immediate data and the memory contents and stores its result in the memory.

OIM ..... (M)+ (IMM) → (M)
Executes "OR" operation to immediate data and the memory contents and stores its result in the memory.

EIM ..... (M) ⊕ (IMM) → (M)
Executes "EOR" operation to immediate data and the memory contents and stores its result in the memory.

TIM ..... (M)·(IMM)
Executes "AND" operation to immediate data and changes the relative flag of the condition code register.

These are the 3-byte instructions; the first byte is op code, the second immediate data and the third address modifier.

XGDX ..... (ACCD)←(IX)
Exchanges the contents of accumulator and the index register.

SLP
Goes to the sleep mode. Refer to "LOW POWER DISSIPATION MODE" for more details of the sleep mode.

Table 12 Index Register, Stack Manipulation Instructions

Pointer Operations	Mnemonic	Addressing Modes															Boolean/ Arithmetic Operation	Condition Code Register					
		IMMED			DIRECT			INDEX			EXTEND			IMPLIED				5	4	3	2	1	0
		OP	~	#	OP	~	#	OP	~	#	OP	~	#	OP	~	#		H	I	N	Z	V	C
Compare Index Reg	CPX	8C	3	3	9C	4	2	AC	5	2	BC	5	3				X − M M + 1	•	•	↕	↕	↕	↕
Decrement Index Reg	DEX													09	1	1	X − 1 → X	•	•	•	↕	•	•
Decrement Stack Pntr	DES													34	1	1	SP − 1 → SP	•	•	•	•	•	•
Increment Index Reg	INX													08	1	1	X + 1 → X	•	•	•	↕	•	•
Increment Stack Pntr	INS													31	1	1	SP + 1 → SP	•	•	•	•	•	•
Load Index Reg	LDX	CE	3	3	DE	4	2	EE	5	2	FE	5	3				M → X_H, (M + 1) → X_L	•	•	⇕	↕	R	•
Load Stack Pntr	LDS	8E	3	3	9E	4	2	AE	5	2	BE	5	3				M → SP_H, (M+1) → SP_L	•	•	⇕	↕	R	•
Store Index Reg	STX				DF	4	2	EF	5	2	FF	5	3				X_H → M, X_L → (M + 1)	•	•	⇕	↕	R	•
Store Stack Pntr	STS				9F	4	2	AF	5	2	BF	5	3				SP_H → M, SP_L → (M + 1)	•	•	⇕	↕	R	•
Index Reg → Stack Pntr	TXS													35	1	1	X − 1 → SP	•	•	•	•	•	•
Stack Pntr → Index Reg	TSX													30	1	1	SP + 1 → X	•	•	•	•	•	•
Add	ABX													3A	1	1	B + X → X	•	•	•	•	•	•
Push Data	PSHX													3C	5	1	X_L → M_{SP}, SP − 1 → SP X_H → M_{SP}, SP − 1 → SP	•	•	•	•	•	•
Pull Data	PULX													38	4	1	SP + 1 → SP, M_{SP} → X_H SP + 1 → SP, M_{SP} → X_L	•	•	•	•	•	•
Exchange	XGDX													18	2	1	ACCD ·· IX	•	•	•	•	•	•

(Note) Condition Code Register will be explained in Note of Table 14.

2

www.chipdocs.com Be sure to visit ChipDocs web site for more information.

Table 13 Jump, Branch Instruction

Operations	Mnemonic	Addressing Modes															Branch Test	Condition Code Register					
		RELATIVE			DIRECT			INDEX			EXTEND			IMPLIED				5	4	3	2	1	0
		OP	~	#	OP	~	#	OP	~	#	OP	~	#	OP	~	#		H	I	N	Z	V	C
Branch Always	BRA	20	3	2													None	•	•	•	•	•	•
Branch Never	BRN	21	3	2													None	•	•	•	•	•	•
Branch If Carry Clear	BCC	24	3	2													C = 0	•	•	•	•	•	•
Branch If Carry Set	BCS	25	3	2													C = 1	•	•	•	•	•	•
Branch If = Zero	BEQ	27	3	2													Z = 1	•	•	•	•	•	•
Branch If ≥ Zero	BGE	2C	3	2													N ⊕ V = 0	•	•	•	•	•	•
Branch If > Zero	BGT	2E	3	2													Z + (N ⊕ V) = 0	•	•	•	•	•	•
Branch If Higher	BHI	22	3	2													C + Z = 0	•	•	•	•	•	•
Branch If ≤ Zero	BLE	2F	3	2													Z + (N ⊕ V) = 1	•	•	•	•	•	•
Branch If Lower Or Same	BLS	23	3	2													C + Z = 1	•	•	•	•	•	•
Branch If < Zero	BLT	2D	3	2													N ⊕ V = 1	•	•	•	•	•	•
Branch If Minus	BMI	2B	3	2													N = 1	•	•	•	•	•	•
Branch If Not Equal Zero	BNE	26	3	2													Z = 0	•	•	•	•	•	•
Branch If Overflow Clear	BVC	28	3	2													V = 0	•	•	•	•	•	•
Branch If Overflow Set	BVS	29	3	2													V = 1	•	•	•	•	•	•
Branch If Plus	BPL	2A	3	2													N = 0	•	•	•	•	•	•
Branch To Subroutine	BSR	8D	5	2														•	•	•	•	•	•
Jump	JMP							6E	3	2	7E	3	3					•	•	•	•	•	•
Jump To Subroutine	JSR				9D	5	2	AD	5	2	BD	6	3					•	•	•	•	•	•
No Operation	NOP													01	1	1	Advances Prog. Cntr. Only	•	•	•	•	•	•
Return From Interrupt	RTI													3B	10	1		↕	↕	↕	↕	↕	↕
Return From Subroutine	RTS													39	5	1		•	•	•	•	•	•
Software Interrupt	SWI													3F	12	1		•	S	•	•	•	•
Wait for Interrupt*	WAI													3E	9	1		•	③	•	•	•	•
Sleep	SLP													1A	4	1		•	•	•	•	•	•

(Note) * WAI puts R/$\overline{W}$ high; Address Bus goes to FFFF; Data Bus goes to the three state.
Condition Code Register will be explained in Note of Table 14.

www.chipdocs.com Be sure to visit ChipDocs web site for more information.

Table 14 Condition Code Register Manipulation Instructions

Operations	Mnemonic	Addressing Modes IMPLIED OP	~	#	Boolean Operation	Condition Code Register 5 H	4 I	3 N	2 Z	1 V	0 C
Clear Carry	CLC	0C	1	1	0 → C	•	•	•	•	•	R
Clear Interrupt Mask	CLI	0E	1	1	0 → I	•	R	•	•	•	•
Clear Overflow	CLV	0A	1	1	0 → V	•	•	•	•	R	•
Set Carry	SEC	0D	1	1	1 → C	•	•	•	•	•	S
Set Interrupt Mask	SEI	0F	1	1	1 → I	•	S	•	•	•	•
Set Overflow	SEV	0B	1	1	1 → V	•	•	•	•	S	•
Accumulator A → CCR	TAP	06	1	1	A → CCR	⑩					
CCR → Accumulator A	TPA	07	1	1	CCR → A	•	•	•	•	•	•

LEGEND

OP Operation Code (Hexadecimal)
~ Number of MCU Cycles
M_{SP} Contents of memory location pointed by Stack Pointer
Number of Program Bytes
+ Arithmetic Plus
– Arithmetic Minus
• Boolean AND
+ Boolean Inclusive OR
⊕ Boolean Exclusive OR
$\overline{M}$ Complement of M
→ Transfer into
0 Bit = Zero
00 Byte = Zero

CONDITION CODE SYMBOLS

H Half-carry from bit 3 to bit 4
I Interrupt mask
N Negative (sign bit)
Z Zero (byte)
V Overflow, 2's complement
C Carry/Borrow from/to bit 7
R Reset Always
S Set Always
↕ Set if true after test or clear
• Not Affected

(Note) Condition Code Register Notes: (Bit set if test is true and cleared otherwise)

① (Bit V) Test: Result = 10000000?
② (Bit C) Test: Result ≠ 00000000?
③ (Bit C) Test: BCD Character of high-order byte greater than 10? (Not cleared if previously set)
④ (Bit V) Test: Operand = 10000000 prior to execution?
⑤ (Bit V) Test: Operand = 01111111 prior to execution?
⑥ (Bit V) Test: Set equal to N⊕ C = 1 after the execution of instructions
⑦ (Bit N) Test: Result less than zero? (Bit 15=1)
⑧ (All Bit) Load Condition Code Register from Stack.
⑨ (Bit I) Set when interrupt occurs. If previously set, a Non-Maskable Interrupt is required to exit the wait state.
⑩ (All Bit) Set according to the contents of Accumulator A.
⑪ (Bit C) Result of Multiplication Bit 7=1? (ACCB)

Table 15 OP-Code Map

OP CODE HI	LO	0000 0	0001 1	0010 2	0011 3	ACC A 0100 4	ACC B 0101 5	IND 0110 6	EXT/DIR* 0111 7	ACCA or SP IMM 1000 8	DIR 1001 9	IND 1010 A	EXT 1011 B	ACCB or X IMM 1100 C	DIR 1101 D	IND 1110 E	EXT 1111 F	
0000	0		SBA	BRA	TSX	NEG				SUB								0
0001	1	NOP	CBA	BRN	INS				AIM	CMP								1
0010	2			BHI	PULA				OIM	SBC								2
0011	3			BLS	PULB	COM				SUBD			ADDD					3
0100	4	LSRD		BCC	DES	LSR				AND								4
0101	5	ASLD		BCS	TXS				EIM	BIT								5
0110	6	TAP	TAB	BNE	PSHA	ROR				LDA								6
0111	7	TPA	TBA	BEQ	PSHB	ASR				STA			STA					7
1000	8	INX	XGDX	BVC	PULX	ASL				EOR								8
1001	9	DEX	DAA	BVS	RTS	ROL				ADC								9
1010	A	CLV	SLP	BPL	ABX	DEC				ORA								A
1011	B	SEV	ABA	BMI	RTI				TIM	ADD								B
1100	C	CLC		BGE	PSHX	INC				CPX				LDD				C
1101	D	SEC		BLT	MUL	TST				BSR	JSR				STD			D
1110	E	CLI		BGT	WAI			JMP		LDS				LDX				E
1111	F	SEI		BLE	SWI	CLR				STS				STX				F
		0	1	2	3	4	5	6	7	8	9	A	B	C	D	E	F	

UNDEFINED OP CODE

* Only each instructions of AIM, OIM, EIM, TIM

www.chipdocs.com Be sure to visit ChipDocs web site for more information.

■ CPU OPERATION

• CPU Instruction Flow

When operating, the CPU fetches an instrution from a memory and executes the required function. This sequence starts with $\overline{RES}$ cancel and repeats itself limitlessly if not affected by a special instruction or a control signal. SWI, RTI, WAI and SLP instructions change this operation, while $\overline{NMI}$, $\overline{IRQ_1}$, $\overline{IRQ_2}$, IRQ_3, $\overline{HALT}$ and $\overline{STBY}$ control it. Fig. 29 gives the CPU mode transition and Fig. 30 the CPU system flow chart. Table 16 shows CPU operating states and port states.

• Operation at Each Instruction Cycle

Table 17 shows the operation at each instruction cycle. By the pipeline control of the HD6303Y, MULT, PUL, DAA and XGDX instructions, etc. prefetch the next instruction. So attention is necessary to the counting of the instruction cycles because it is different from the usual one—from op code fetch to the next instruction op code.

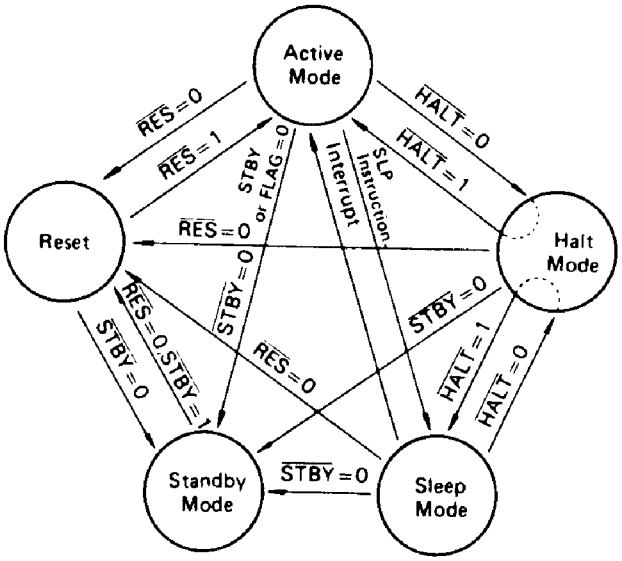

Figure 29 CPU Operation Mode Transition

Table 16 CPU Operation State and Port, Bus, Control Signal State

Port	Reset	STBY*3	HALT	Sleep
$A_0 \sim A_7$	H	T	T	H
Port 2	T	T	Keep	Keep
$D_0 \sim D_7$	T	T	T	T
$A_8 \sim A_{15}$	H	T	T	H
Port 5	T	T	Keep	Keep
Port 6	T	T	Keep	Keep
Control Signal	*1	T	*2	*1

*1 $\overline{RD}$, $\overline{WR}$, R/$\overline{W}$, $\overline{LIR}$ = H, BA = L
*2 $\overline{RD}$, $\overline{WR}$, R/$\overline{W}$ = T, $\overline{LIR}$, BA = H
*3 E pin goes to high impedance state.

www.chipdocs.com Be sure to visit ChipDocs web site for more information.

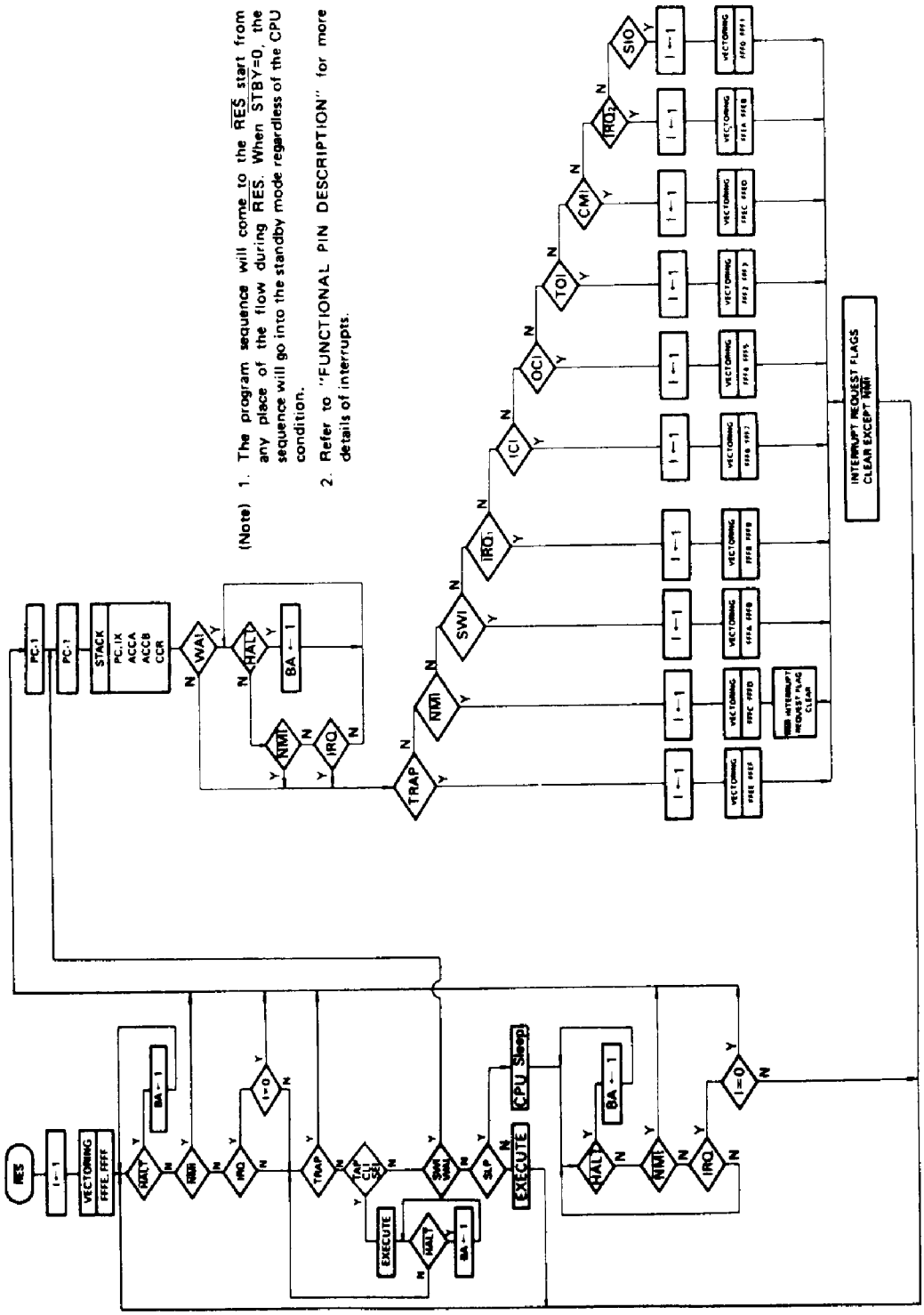

Figure 30 HD6303Y System Flow Chart

2

www.chipdocs.com Be sure to visit ChipDocs web site for more information.

Table 17 Cycle-by-Cycle Operation

Address Mode & Instructions	Cycles	Cycle #	Address Bus	R/$\overline{W}$	$\overline{RD}$	$\overline{WR}$	$\overline{LIR}$	Data Bus
IMMEDIATE								
ADC ADD AND BIT CMP EOR LDA ORA SBC SUB	2	1	Op Code Address + 1	1	0	1	1	Operand Data
		2	Op Code Address + 2	1	0	1	0	Next Op Code
ADDD CPX LDD LDS LDX SUBD	3	1	Op Code Address + 1	1	0	1	1	Operand Data (MSB)
		2	Op Code Address + 2	1	0	1	1	Operand Data (LSB)
		3	Op Code Address + 3	1	0	1	0	Next Op Code
DIRECT								
ADC ADD AND BIT CMP EOR LDA ORA SBC SUB	3	1	Op Code Address + 1	1	0	1	1	Address of Operand (LSB)
		2	Address of Operand	1	0	1	1	Operand Data
		3	Op Code Address + 2	1	0	1	0	Next Op Code
STA	3	1	Op Code Address + 1	1	0	1	1	Destination Address
		2	Destination Address	0	1	0	1	Accumulator Data
		3	Op Code Address + 2	1	0	1	0	Next Op Code
ADDD CPX LDD LDS LDX SUBD	4	1	Op Code Address + 1	1	0	1	1	Address of Operand (LSB)
		2	Address of Operand	1	0	1	1	Operand Data (MSB)
		3	Address of Operand + 1	1	0	1	1	Operand Data (LSB)
		4	Op Code Address + 2	1	0	1	0	Next Op Code
STD STS STX	4	1	Op Code Address + 1	1	0	1	1	Destination Address (LSB)
		2	Destination Address	0	1	0	1	Register Data (MSB)
		3	Destination Address + 1	0	1	0	1	Register Data (LSB)
		4	Op Code Address + 2	1	0	1	0	Next Op Code
JSR	5	1	Op Code Address + 1	1	0	1	1	Jump Address (LSB)
		2	FFFF	1	1	1	1	Restart Address (LSB)
		3	Stack Pointer	0	1	0	1	Return Address (LSB)
		4	Stack Pointer − 1	0	1	0	1	Return Address (MSB)
		5	Jump Address	1	0	1	0	First Subroutine Op Code
TIM	4	1	Op Code Address + 1	1	0	1	1	Immediate Data
		2	Op Code Address + 2	1	0	1	1	Address of Operand (LSB)
		3	Address of Operand	1	0	1	1	Operand Data
		4	Op Code Address + 3	1	0	1	0	Next Op Code
AIM EIM OIM	6	1	Op Code Address + 1	1	0	1	1	Immediate Data
		2	Op Code Address + 2	1	0	1	1	Address of Operand (LSB)
		3	Address of Operand	1	0	1	1	Operand Data
		4	FFFF	1	1	1	1	Restart Address (LSB)
		5	Address of Operand	0	1	0	1	New Operand Data
		6	Op Code Address + 3	1	0	1	0	Next Op Code

(Continued)

www.chipdocs.com Be sure to visit ChipDocs web site for more information.

Address Mode & Instructions	Cycles	Cycle #	Address Bus	R/$\overline{W}$	$\overline{RD}$	$\overline{WR}$	$\overline{LIR}$	Data Bus
INDEXED								
JMP	3	1	Op Code Address + 1	1	0	1	1	Offset
		2	FFFF	1	1	1	1	Restart Address (LSB)
		3	Jump Address	1	0	1	0	First Op Code of Jump Routine
ADC ADD AND BIT CMP EOR LDA ORA SBC SUB TST	4	1	Op Code Address + 1	1	0	1	1	Offset
		2	FFFF	1	1	1	1	Restart Address (LSB)
		3	IX + Offset	1	0	1	1	Operand Data
		4	Op Code Address + 2	1	0	1	0	Next Op Code
STA	4	1	Op Code Address + 1	1	0	1	1	Offset
		2	FFFF	1	1	1	1	Restart Address (LSB)
		3	IX + Offset	0	1	0	1	Accumulator Data
		4	Op Code Address + 2	1	0	1	0	Next Op Code
ADDD CPX LDD LDS LDX SUBD	5	1	Op Code Address + 1	1	0	1	1	Offset
		2	FFFF	1	1	1	1	Restart Address (LSB)
		3	IX + Offset	1	0	1	1	Operand Data (MSB)
		4	IX + Offset + 1	1	0	1	1	Operand Data (LSB)
		5	Op Code Address + 2	1	0	1	0	Next Op Code
STD STS STX	5	1	Op Code Address + 1	1	0	1	1	Offset
		2	FFFF	1	1	1	1	Restart Address (LSB)
		3	IX + Offset	0	1	0	1	Register Data (MSB)
		4	IX + Offset + 1	0	1	0	1	Register Data (LSB)
		5	Op Code Address + 2	1	0	1	0	Next Op Code
JSR	5	1	Op Code Address + 1	1	0	1	1	Offset
		2	FFFF	1	1	1	1	Restart Address (LSB)
		3	Stack Pointer	0	1	0	1	Return Address (LSB)
		4	Stack Pointer − 1	0	1	0	1	Return Address (MSB)
		5	IX + Offset	1	0	1	0	First Subroutine Op Code
ASL ASR COM DEC INC LSR NEG ROL ROR	6	1	Op Code Address + 1	1	0	1	1	Offset
		2	FFFF	1	1	1	1	Restart Address (LSB)
		3	IX + Offset	1	0	1	1	Operand Data
		4	FFFF	1	1	1	1	Restart Address (LSB)
		5	IX + Offset	0	1	0	1	New Operand Data
		6	OP Code Address + 2	1	0	1	0	Next Op Code
TIM	5	1	Op Code Address + 1	1	0	1	1	Immediate Data
		2	Op Code Address + 2	1	0	1	1	Offset
		3	FFFF	1	1	1	1	Restart Address (LSB)
		4	IX + Offset	1	0	1	1	Operand Data
		5	Op Code Address + 3	1	0	1	0	Next Op Code
CLR	5	1	Op Code Address + 1	1	0	1	1	Offset
		2	FFFF	1	1	1	1	Restart Address (LSB)
		3	IX + Offset	1	0	1	1	Operand Data
		4	IX + Offset	0	1	0	1	00
		5	Op Code Address + 2	1	0	1	0	Next Op Code
AIM EIM OIM	7	1	Op Code Address + 1	1	0	1	1	Immediate Data
		2	Op Code Address + 2	1	0	1	1	Offset
		3	FFFF	1	1	1	1	Restart Address (LSB)
		4	IX + Offset	1	0	1	1	Operand Data
		5	FFFF	1	1	1	1	Restart Address (LSB)
		6	IX + Offset	0	1	0	1	New Operand Data
		7	Op Code Address + 3	1	0	1	0	Next Op Code

(Continued)

www.chipdocs.com Be sure to visit ChipDocs web site for more information.

Address Mode & Instructions	Cycles	Cycle #	Address Bus	R/$\overline{W}$	$\overline{RD}$	$\overline{WR}$	$\overline{LIR}$	Data Bus
EXTEND								
JMP	3	1	Op Code Address + 1	1	0	1	1	Jump Address (MSB)
		2	Op Code Address + 2	1	0	1	1	Jump Address (LSB)
		3	Jump Address	1	0	1	0	Next Op Code
ADC ADD TST AND BIT CMP EOR LDA ORA SBC SUB	4	1	Op Code Address + 1	1	0	1	1	Address of Operand (MSB)
		2	Op Code Address + 2	1	0	1	1	Address of Operand (LSB)
		3	Address of Operand	1	0	1	1	Operand Data
		4	Op Code Address + 3	1	0	1	0	Next Op Code
STA	4	1	Op Code Address + 1	1	0	1	1	Destination Address (MSB)
		2	Op Code Address + 2	1	0	1	1	Destination Address (LSB)
		3	Destination Address	0	1	0	1	Accumulator Data
		4	Op Code Address + 3	1	0	1	0	Next Op Code
ADDD CPX LDD LDS LDX SUBD	5	1	Op Code Address + 1	1	0	1	1	Address of Operand (MSB)
		2	Op Code Address + 2	1	0	1	1	Address of Operand (LSB)
		3	Address of Operand	1	0	1	1	Operand Data (MSB)
		4	Address of Operand + 1	1	0	1	1	Operand Data (LSB)
		5	Op Code Address + 3	1	0	1	0	Next Op Code
STD STS STX	5	1	Op Code Address + 1	1	0	1	1	Destination Address (MSB)
		2	Op Code Address + 2	1	0	1	1	Destination Address (LSB)
		3	Destination Address	0	1	0	1	Register Data (MSB)
		4	Destination Address + 1	0	1	0	1	Register Data (LSB)
		5	Op Code Address + 3	1	0	1	0	Next Op Code
JSR	6	1	Op Code Address + 1	1	0	1	1	Jump Address (MSB)
		2	Op Code Address + 2	1	0	1	1	Jump Address (LSB)
		3	FFFF	1	1	1	1	Restart Address (LSB)
		4	Stack Pointer	0	1	0	1	Return Address (LSB)
		5	Stack Pointer − 1	0	1	0	1	Return Address (MSB)
		6	Jump Address	1	0	1	0	First Subroutine Op Code
ASL ASR COM DEC INC LSR NEG ROL ROR	6	1	Op Code Address + 1	1	0	1	1	Address of Operand (MSB)
		2	Op Code Address + 2	1	0	1	1	Address of Operand (LSB)
		3	Address of Operand	1	0	1	1	Operand Data
		4	FFFF	1	1	1	1	Restart Address (LSB)
		5	Address of Operand	0	1	0	1	New Operand Data
		6	Op Code Address + 3	1	0	1	0	Next Op Code
CLR	5	1	Op Code Address + 1	1	0	1	1	Address of Operand (MSB)
		2	Op Code Address + 2	1	0	1	1	Address of Operand (LSB)
		3	Address of Operand	1	0	1	1	Operand Data
		4	Address of Operand	0	1	0	1	00
		5	Op Code Address + 3	1	0	1	0	Next Op Code

(Continued)

www.chipdocs.com Be sure to visit ChipDocs web site for more information.

Address Mode & Instructions	Cycles	Cycle #	Address Bus	R/$\overline{W}$	$\overline{RD}$	$\overline{WR}$	$\overline{LIR}$	Data Bus
IMPLIED								
ABA ABX ASL ASLD ASR CBA CLC CLI CLR CLV COM DEC DES DEX INC INS INX LSR LSRD ROL ROR NOP SBA SEC SEI SEV TAB TAP TBA TPA TST TSX TXS	1	1	Op Code Address + 1	1	0	1	0	Next Op Code
DAA XGDX	2	1	Op Code Address + 1	1	0	1	0	Next Op Code
		2	FFFF	1	1	1	1	Restart Address (LSB)
PULA PULB	3	1	Op Code Address + 1	1	0	1	0	Next Op Code
		2	FFFF	1	1	1	1	Restart Address (LSB)
		3	Stack Pointer + 1	1	0	1	1	Data from Stack
PSHA PSHB	4	1	Op Code Address + 1	1	0	1	1	Next Op Code
		2	FFFF	1	1	1	1	Restart Address (LSB)
		3	Stack Pointer	0	1	0	1	Accumulator Data
		4	Op Code Address + 1	1	0	1	0	Next Op Code
PULX	4	1	Op Code Address + 1	1	0	1	0	Next Op Code
		2	FFFF	1	1	1	1	Restart Address (LSB)
		3	Stack Pointer + 1	1	0	1	1	Data from Stack (MSB)
		4	Stack Pointer + 2	1	0	1	1	Data from Stack (LSB)
PSHX	5	1	Op Code Address + 1	1	0	1	1	Next Op Code
		2	FFFF	1	1	1	1	Restart Address (LSB)
		3	Stack Pointer	0	1	0	1	Index Register (LSB)
		4	Stack Pointer − 1	0	1	0	1	Index Register (MSB)
		5	Op Code Address + 1	1	0	1	0	Next Op Code
RTS	5	1	Op Code Address + 1	1	0	1	1	Next Op Code
		2	FFFF	1	1	1	1	Restart Address (LSB)
		3	Stack Pointer + 1	1	0	1	1	Return Address (MSB)
		4	Stack Pointer + 2	1	0	1	1	Return Address (LSB)
		5	Return Address	1	0	1	0	First Op Code of Return Routine
MUL	7	1	Op Code Address + 1	1	0	1	0	Next Op Code
		2	FFFF	1	1	1	1	Restart Address (LSB)
		3	FFFF	1	1	1	1	Restart Address (LSB)
		4	FFFF	1	1	1	1	Restart Address (LSB)
		5	FFFF	1	1	1	1	Restart Address (LSB)
		6	FFFF	1	1	1	1	Restart Address (LSB)
		7	FFFF	1	1	1	1	Restart Address (LSB)

(Continued)

www.chipdocs.com Be sure to visit ChipDocs web site for more information.

Address Mode & Instructions	Cycles	Cycle #	Address Bus	R/$\overline{W}$	$\overline{RD}$	$\overline{WR}$	$\overline{LIR}$	Data Bus
IMPLIED								
WAI	9	1	Op Code Address + 1	1	0	1	1	Next Op Code
		2	FFFF	1	1	1	1	Restart Address (LSB)
		3	Stack Pointer	0	1	0	1	Return Address (LSB)
		4	Stack Pointer − 1	0	1	0	1	Return Address (MSB)
		5	Stack Pointer − 2	0	1	0	1	Index Register (LSB)
		6	Stack Pointer − 3	0	1	0	1	Index Register (MSB)
		7	Stack Pointer − 4	0	1	0	1	Accumulator A
		8	Stack Pointer − 5	0	1	0	1	Accumulator B
		9	Stack Pointer − 6	0	1	0	1	Conditional Code Register
RTI	10	1	Op Code Address + 1	1	0	1	1	Next Op Code
		2	FFFF	1	1	1	1	Restart Address (LSB)
		3	Stack Pointer + 1	1	0	1	1	Conditional Code Register
		4	Stack Pointer + 2	1	0	1	1	Accumulator B
		5	Stack Pointer + 3	1	0	1	1	Accumulator A
		6	Stack Pointer + 4	1	0	1	1	Index Register (MSB)
		7	Stack Pointer + 5	1	0	1	1	Index Register (LSB)
		8	Stack Pointer + 6	1	0	1	1	Return Address (MSB)
		9	Stack Pointer + 7	1	0	1	1	Return Address (LSB)
		10	Return Address	1	0	1	0	First Op Code of Return Routine
SWI	12	1	Op Code Address + 1	1	0	1	1	Next Op Code
		2	FFFF	1	1	1	1	Restart Address (LSB)
		3	Stack Pointer	0	1	0	1	Return Address (LSB)
		4	Stack Pointer − 1	0	1	0	1	Return Address (MSB)
		5	Stack Pointer − 2	0	1	0	1	Index Register (LSB)
		6	Stack Pointer − 3	0	1	0	1	Index Register (MSB)
		7	Stack Pointer − 4	0	1	0	1	Accumulator A
		8	Stack Pointer − 5	0	1	0	1	Accumulator B
		9	Stack Pointer − 6	0	1	0	1	Conditional Code Register
		10	Vector Address FFFA	1	0	1	1	Address of SWI Routine (MSB)
		11	Vector Address FFFB	1	0	1	1	Address of SWI Routine (LSB)
		12	Address of SWI Routine	1	0	1	0	First Op Code of SWI Routine
SLP	4	1	Op Code Address + 1	1	0	1	1	Next Op Code
		2	FFFF	1	1	1	1	Restart Address (LSB)
		Sleep						
		3	FFFF	1	1	1	1	Restart Address (LSB)
		4	Op Code Address + 1	1	0	1	0	Next Op Code
RELATIVE								
BCC BCS BEQ BGE BGT BHI BLE BLS BLT BMT BNE BPL BRA BRN BVC BVS	3	1	Op Code Address + 1	1	0	1	1	Branch Offset
		2	FFFF	1	1	1	1	Restart Address (LSB)
		3	Branch Address Test = "1" Op Code Address + 1 Test = "0"	1	0	1	0	First Op Code of Branch Routine Next Op Code
BSR	5	1	Op Code Address + 1	1	0	1	1	Offset
		2	FFFF	1	1	1	1	Restart Address (LSB)
		3	Stack Pointer	0	1	0	1	Return Address (LSB)
		4	Stack Pointer − 1	0	1	0	1	Return Address (MSB)
		5	Branch Address	1	0	1	0	First Op Code of Subroutine

www.chipdocs.com Be sure to visit ChipDocs web site for more information.

■ WARNING CONCERNING THE BOARD DESIGN OF OSCILLATION CIRCUIT

When designing a board, note that crosstalk may disturb the normal oscillation if signal lines are placed near the oscillation circuit as shown in Figure 31. Place the crystal and C_L as close to the HD6303Y as possible.

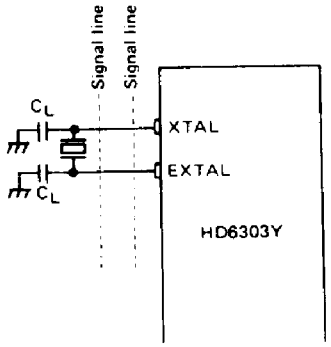

Do not use this kind of printed-circuit board design.

Figure 31 Warning concerning board design of oscillation circuit

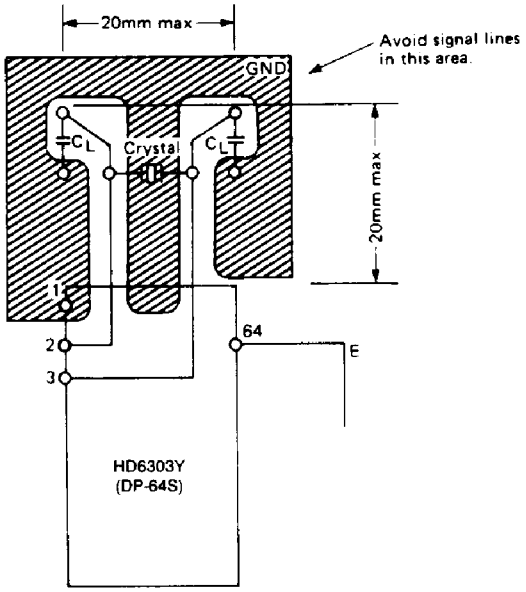

(Top View)

Figure 32 Example of Oscillation Circuits in Board Design

■ RECEIVE MARGIN OF THE SCI

Receive margin of the SCI contained in the HD6303Y is shown in Table 18.

Note: SCI = Serial Communication Interface

Table 18

	Bit distortion tolerance (t−to) /to	Character distortion tolerance (T−To) /To
HD6303Y	±43.7%	±4.37%

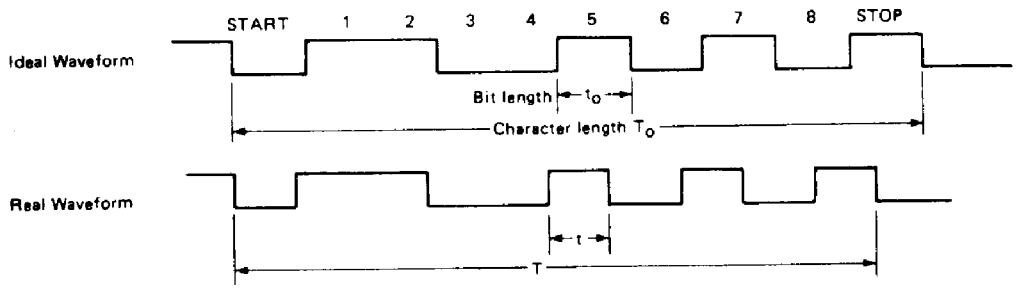

www.chipdocs.com Be sure to visit ChipDocs web site for more information.

■ WARNING CONCERNING WAI INSTRUCTION

If the HALT signal is accepted by the MCU while the WAI instruction is executing, the CPU will not operate correctly after HALT mode is canceled.

WAI is a instruction which waits for an interrupt. The corresponding interrupt routine is executed after an interrupt occurs.

However, during the execution of the WAI instruction, $\overline{\text{HALT}}$ input makes the CPU malfunction and fetch an abnormal interrupt vectoring address.

In HALT mode, the CPU operates correctly without the WAI instruction, and WAI is executed correctly without $\overline{\text{HALT}}$ input. Therefore, if $\overline{\text{HALT}}$ input is necessary, make interrupts wait during the loop routine, as shown in Figure 33.

■ WRITE-ONLY REGISTER

When the CPU reads a write-only register, the read data is always $FF, regardless of the value in the write-only register. Therefore, be careful of the results of instructions which read write-only register and perform an arithmetic or logical operation on its contents, such as AIM, ADD, or ROL, is executed, because the arithmetic or logical operation is always done with the data $FF. In particulars, don't use the AIM, OIM or EIM instruction to manipulate the DDR bit of PORT.

■ WARNING CONCERNING POWER START-UP

$\overline{\text{RES}}$ must be held low for at least 20 ms when the power starts up. In this case, the internal reset function is not effective until the oscillation begins at power-on. The $\overline{\text{RES}}$ signal is input to the LSI in synchronism with the internal clock ϕ (shown in Figure 35.)

Therefore, after power starts up, the LSI conditions such as its I/O ports and operating mode, are unstable. Fix the level of I/O ports by means of an external circuit to determine the level for system operation during the oscillator stabilization time.

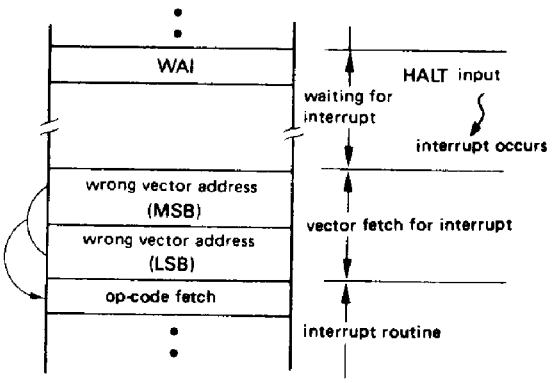

Figure 33 MAC function during WAI

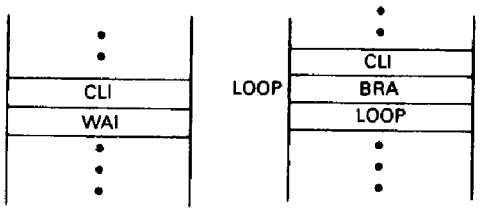

i) MAL function ii) Recommended method

Figure 34 Program to wait for interrupt

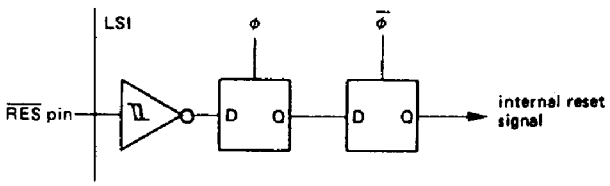

Figure 35 $\overline{\text{RES}}$ circuit

www.chipdocs.com Be sure to visit ChipDocs web site for more information.

ENTEGRECİ

Bu belge www.entegreci.com üzerinden sunulmaktadır.

Elektronik komponent tedarikinde Entegreci

Entegreci, Eskişehir merkezli, Türkiye geneline satış yapan bir elektronik komponent mağazasıdır. Entegreler (IC), mikrodenetleyiciler, transistörler, diyotlar, pasif elemanlar, konnektörler, modüller ve geliştirme kartları tek adetten seri üretim adetlerine kadar satılır. Ürün sayfalarında güncel stok durumunu, fiyatı ve datasheet bağlantısını bulabilirsiniz.

Parça koduyla arama

Üretici parça numarasını yazın; stok ve fiyatı hemen görün.

www.entegreci.com

Ürün kategorileri

Entegreden kapasitöre tüm elektronik komponent kategorileri.

Kategorilere göz atın

Üreticiler

Aradığınız üreticinin ürünlerini tek sayfada inceleyin.

Üreticileri görün

Toplu alım ve teklif

Listede olmayan ya da yüksek adetli parçalar için teklif isteyin.

Teklif isteyin

www.entegreci.com | **destek@entegreci.com** | **0850 305 90 34**

Entegreci is an online electronic components store based in Türkiye. Search by manufacturer part number to see stock, prices and datasheets for integrated circuits, microcontrollers, transistors, passive components and connectors, or request a quote for parts that are not listed.

Bu sayfa Entegreci tarafından eklenmiştir. Belgenin önceki sayfaları asıl yayıncısına aittir ve içeriği değiştirilmemiştir; en güncel sürüm için belgenin yayıncısına başvurun.