National Semiconductor

March 1988

CD4049UBM/CD4049UBC Hex Inverting Buffer
CD4050BM/CD4050BC Hex Non-Inverting Buffer

General Description

These hex buffers are monolithic complementary MOS (CMOS) integrated circuits constructed with N- and P-channel enhancement mode transistors. These devices feature logic level conversion using only one supply voltage (V_{DD}). The input signal high level (V_{IH}) can exceed the V_{DD} supply voltage when these devices are used for logic level conversions. These devices are intended for use as hex buffers, CMOS to DTL/TTL converters, or as CMOS current drivers, and at V_{DD} = 5.0V, they can drive directly two DTL/TTL loads over the full operating temperature range.

Features

- Wide supply voltage range 3.0V to 15V
- Direct drive to 2 TTL loads at 5.0V over full temperature range
- High source and sink current capability
- Special input protection permits input voltages greater than V_{DD}

Applications

- CMOS hex inverter/buffer
- CMOS to DTL/TTL hex converter
- CMOS current "sink" or "source" driver
- CMOS high-to-low logic level converter

Connection Diagrams

CD4049UBM/CD4049UBC
Dual-In-Line Package

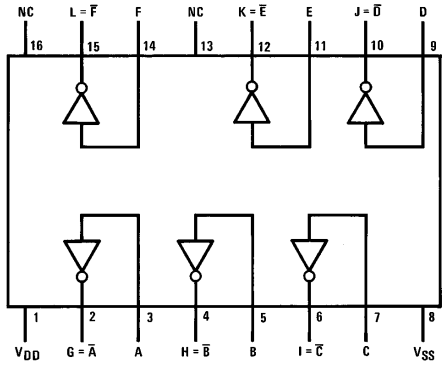

TL/F/5971–1

Top View

Order Number CD4049UB or CD4049B

CD4050BM/CD4050BC
Dual-In-Line Package

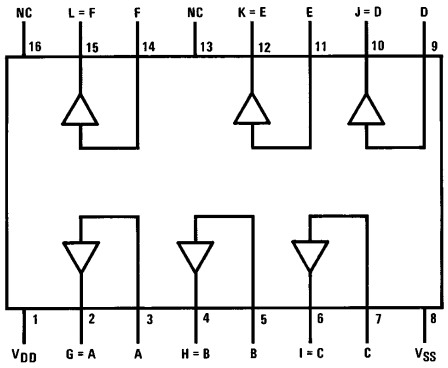

TL/F/5971–2

Top View

Order Number CD4050UB or CD4050B

CD4049UBM/CD4049UBC Hex Inverting Buffer
CD4050BM/CD4050BC Hex Non-Inverting Buffer

©1995 National Semiconductor Corporation

RRD-B30M105/Printed in U. S. A.

Absolute Maximum Ratings (Notes 1 & 2)

If Military/Aerospace specified devices are required, please contact the National Semiconductor Sales Office/Distributors for availability and specifications.

Supply Voltage (V_{DD})	−0.5V to +18V
Input Voltage (V_{IN})	−0.5V to +18V
Voltage at Any Output Pin (V_{OUT})	−0.5V to V_{DD} + 0.5V
Storage Temperature Range (T_S)	−65°C to +150°C
Power Dissipation (P_D)	
Dual-In-Line	700 mW
Small Outline	500 mW
Lead Temperature (T_L)	
(Soldering, 10 seconds)	260°C

Recommended Operating Conditions (Note 2)

Supply Voltage (V_{DD})	3V to 15V
Input Voltage (V_{IN})	0V to 15V
Voltage at Any Output Pin (V_{OUT})	0 to V_{DD}
Operating Temperature Range (T_A)	
CD4049UBM, CD4050BM	−55°C to +125°C
CD4049UBC, CD4050BC	−40°C to +85°C

DC Electrical Characteristics CD4049M/CD4050BM (Note 2)

Symbol	Parameter	Conditions	−55°C		+25°C			+125°C		Units
			Min	Max	Min	Typ	Max	Min	Max	
I_{DD}	Quiescent Device Current	V_{DD} = 5V		1.0		0.01	1.0		30	μA
		V_{DD} = 10V		2.0		0.01	2.0		60	μA
		V_{DD} = 15V		4.0		0.03	4.0		120	μA
V_{OL}	Low Level Output Voltage	V_{IH} = V_{DD}, V_{IL} = 0V, $\|I_O\|$ < 1 μA								
		V_{DD} = 5V		0.05		0	0.05		0.05	V
		V_{DD} = 10V		0.05		0	0.05		0.05	V
		V_{DD} = 15V		0.05		0	0.05		0.05	V
V_{OH}	High Level Output Voltage	V_{IH} = V_{DD}, V_{IL} = 0V, $\|I_O\|$ < 1 μA								
		V_{DD} = 5V	4.95		4.95	5		4.95		V
		V_{DD} = 10V	9.95		9.95	10		9.95		V
		V_{DD} = 15V	14.95		14.95	15		14.95		V
V_{IL}	Low Level Input Voltage (CD4050BM Only)	$\|I_O\|$ < 1 μA								
		V_{DD} = 5V, V_O = 0.5V		1.5		2.25	1.5		1.5	V
		V_{DD} = 10V, V_O = 1V		3.0		4.5	3.0		3.0	V
		V_{DD} = 15V, V_O = 1.5V		4.0		6.75	4.0		4.0	V
V_{IL}	Low Level Input Voltage (CD4049UBM Only)	$\|I_O\|$ < 1 μA								
		V_{DD} = 5V, V_O = 4.5V		1.0		1.5	1.0		1.0	V
		V_{DD} = 10V, V_O = 9V		2.0		2.5	2.0		2.0	V
		V_{DD} = 15V, V_O = 13.5V		3.0		3.5	3.0		3.0	V
V_{IH}	High Level Input Voltage (CD4050BM Only)	$\|I_O\|$ < 1 μA								
		V_{DD} = 5V, V_O = 4.5V	3.5		3.5	2.75		3.5		V
		V_{DD} = 10V, V_O = 9V	7.0		7.0	5.5		7.0		V
		V_{DD} = 15V, V_O = 13.5V	11.0		11.0	8.25		11.0		V
V_{IH}	High Level Input Voltage (CD4049UBM Only)	$\|I_O\|$ < 1 μA								
		V_{DD} = 5V, V_O = 0.5V	4.0		4.0	3.5		4.0		V
		V_{DD} = 10V, V_O = 1V	8.0		8.0	7.5		8.0		V
		V_{DD} = 15V, V_O = 1.5V	12.0		12.0	11.5		12.0		V
I_{OL}	Low Level Output Current (Note 3)	V_{IH} = V_{DD}, V_{IL} = 0V								
		V_{DD} = 5V, V_O = 0.4V	5.6		4.6	5		3.2		mA
		V_{DD} = 10V, V_O = 0.5V	12		9.8	12		6.8		mA
		V_{DD} = 15V, V_O = 1.5V	35		29	40		20		mA

Note 1: "Absolute Maximum Ratings" are those values beyond which the safety of the device cannot be guaranteed; they are not meant to imply that the devices should be operated at these limits. The table of "Recommended Operating Conditions" and "Electrical Characteristics" provides conditions for actual device operation.

Note 2: V_{SS} = 0V unless otherwise specified.

Note 3: These are *peak* output current capabilities. Continuous output current is rated at 12 mA maximum. The output current should not be allowed to exceed this value for extended periods of time. I_{OL} and I_{OH} are tested one output at a time.

DC Electrical Characteristics CD4049M/CD4050BM (Note 2) (Continued)

Symbol	Parameter	Conditions	−55°C		+25°C			+125°C		Units
			Min	Max	Min	Typ	Max	Min	Max	
I_{OH}	High Level Output Current (Note 3)	$V_{IH} = V_{DD}$, $V_{IL} = 0V$								
		$V_{DD} = 5V$, $V_O = 4.6V$	−1.3		−1.1	−1.6		−0.72		mA
		$V_{DD} = 10V$, $V_O = 9.5V$	−2.6		−2.2	−3.6		−1.5		mA
		$V_{DD} = 15V$, $V_O = 13.5V$	−8.0		−7.2	−12		−5.0		mA
I_{IN}	Input Current	$V_{DD} = 15V$, $V_{IN} = 0V$		−0.1		-10^{-5}	−0.1		−1.0	μA
		$V_{DD} = 15V$, $V_{IN} = 15V$		0.1		10^{-5}	0.1		1.0	μA

Note 1: "Absolute Maximum Ratings" are those values beyond which the safety of the device cannot be guaranteed; they are not meant to imply that the devices should be operated at these limits. The table of "Recommended Operating Conditions" and "Electrical Characteristics" provides conditions for actual device operation.

Note 2: $V_{SS} = 0V$ unless otherwise specified.

Note 3: These are *peak* output current capabilities. Continuous output current is rated at 12 mA maximum. The output current should not be allowed to exceed this value for extended periods of time. I_{OL} and I_{OH} are tested one output at a time.

DC Electrical Characteristics CD4049UBC/CD4050BC (Note 2)

Symbol	Parameter	Conditions	−40°C		+25°C			+85°C		Units
			Min	Max	Min	Typ	Max	Min	Max	
I_{DD}	Quiescent Device Current	$V_{DD} = 5V$		4		0.03	4.0		30	μA
		$V_{DD} = 10V$		8		0.05	8.0		60	μA
		$V_{DD} = 15V$		16		0.07	16.0		120	μA
V_{OL}	Low Level Output Voltage	$V_{IH} = V_{DD}$, $V_{IL} = 0V$, $\|I_O\| < 1\ \mu A$								
		$V_{DD} = 5V$		0.05		0	0.05		0.05	V
		$V_{DD} = 10V$		0.05		0	0.05		0.05	V
		$V_{DD} = 15V$		0.05		0	0.05		0.05	V
V_{OH}	High Level Output Voltage	$V_{IH} = V_{DD}$, $V_{IL} = 0V$, $\|I_O\| < 1\ \mu A$								
		$V_{DD} = 5V$	4.95		4.95	5		4.95		V
		$V_{DD} = 10V$	9.95		9.95	10		9.95		V
		$V_{DD} = 15V$	14.95		14.95	15		14.95		V
V_{IL}	Low Level Input Voltage (CD4050BC Only)	$\|I_O\| < 1\ \mu A$								
		$V_{DD} = 5V$, $V_O = 0.5V$		1.5		2.25	1.5		1.5	V
		$V_{DD} = 10V$, $V_O = 1V$		3.0		4.5	3.0		3.0	V
		$V_{DD} = 15V$, $V_O = 1.5V$		4.0		6.75	4.0		4.0	V
V_{IL}	Low Level Input Voltage (CD4049UBC Only)	$\|I_O\| < 1\ \mu A$								
		$V_{DD} = 5V$, $V_O = 4.5V$		1.0		1.5	1.0		1.0	V
		$V_{DD} = 10V$, $V_O = 9V$		2.0		2.5	2.0		2.0	V
		$V_{DD} = 15V$, $V_O = 13.5V$		3.0		3.5	3.0		3.0	V
V_{IH}	High Level Input Voltage (CD4050BC Only)	$\|I_O\| < 1\ \mu A$								
		$V_{DD} = 5V$, $V_O = 4.5V$	3.5		3.5	2.75		3.5		V
		$V_{DD} = 10V$, $V_O = 9V$	7.0		7.0	5.5		7.0		V
		$V_{DD} = 15V$, $V_O = 13.5V$	11.0		11.0	8.25		11.0		V
V_{IH}	High Level Input Voltage (CD4049UBC Only)	$\|I_O\| < 1\ \mu A$								
		$V_{DD} = 5V$, $V_O = 0.5V$	4.0		4.0	3.5		4.0		V
		$V_{DD} = 10V$, $V_O = 1V$	8.0		8.0	7.5		8.0		V
		$V_{DD} = 15V$, $V_O = 1.5V$	12.0		12.0	11.5		12.0		V

Note 1: "Absolute Maximum Ratings" are those values beyond which the safety of the device cannot be guaranteed; they are not meant to imply that the devices should be operated at these limits. The table of "Recommended Operating Conditions" and "Electrical Characteristics" provides conditions for actual device operation.

Note 2: $V_{SS} = 0V$ unless otherwise specified.

Note 3: These are *peak* output current capabilities. Continuous output current is rated at 12 mA maximum. The output current should not be allowed to exceed this value for extended periods of time. I_{OL} and I_{OH} are tested one output at a time.

DC Electrical Characteristics CD4049UBC/CD4050BC (Note 2) (Continued)

Symbol	Parameter	Conditions	−40°C		+25°C			+85°C		Units
			Min	Max	Min	Typ	Max	Min	Max	
I_{OL}	Low Level Output Current (Note 3)	$V_{IH} = V_{DD}$, $V_{IL} = 0V$								
		$V_{DD} = 5V$, $V_O = 0.4V$	4.6		4.0	5		3.2		mA
		$V_{DD} = 10V$, $V_O = 0.5V$	9.8		8.5	12		6.8		mA
		$V_{DD} = 15V$, $V_O = 1.5V$	29		25	40		20		mA
I_{OH}	High Level Output Current (Note 3)	$V_{IH} = V_{DD}$, $V_{IL} = 0V$								
		$V_{DD} = 5V$, $V_O = 4.6V$	−1.0		−0.9	−1.6		−0.72		mA
		$V_{DD} = 10V$, $V_O = 9.5V$	−2.1		−1.9	−3.6		−1.5		mA
		$V_{DD} = 15V$, $V_O = 13.5V$	−7.1		−6.2	−12		−5		mA
I_{IN}	Input Current	$V_{DD} = 15V$, $V_{IN} = 0V$	−0.3		−0.3	-10^{-5}			−1.0	μA
		$V_{DD} = 15V$, $V_{IN} = 15V$	0.3		0.3	10^{-5}			1.0	μA

AC Electrical Characteristics* CD4049UBM/CD4049UBC

$T_A = 25°C$, $C_L = 50$ pF, $R_L = 200k$, $t_r = t_f = 20$ ns, unless otherwise specified

Symbol	Parameter	Conditions	Min	Typ	Max	Units
t_{PHL}	Propagation Delay Time High-to-Low Level	$V_{DD} = 5V$		30	65	ns
		$V_{DD} = 10V$		20	40	ns
		$V_{DD} = 15V$		15	30	ns
t_{PLH}	Propagation Delay Time Low-to-High Level	$V_{DD} = 5V$		45	85	ns
		$V_{DD} = 10V$		25	45	ns
		$V_{DD} = 15V$		20	35	ns
t_{THL}	Transition Time High-to-Low Level	$V_{DD} = 5V$		30	60	ns
		$V_{DD} = 10V$		20	40	ns
		$V_{DD} = 15V$		15	30	ns
t_{TLH}	Transition Time Low-to-High Level	$V_{DD} = 5V$		60	120	ns
		$V_{DD} = 10V$		30	55	ns
		$V_{DD} = 15V$		25	45	ns
C_{IN}	Input Capacitance	Any Input		15	22.5	pF

*AC Parameters are guaranteed by DC correlated testing.

AC Electrical Characteristics* CD4050BM/CD4050BC

$T_A = 25°C$, $C_L = 50$ pF, $R_L = 200k$, $t_r = t_f = 20$ ns, unless otherwise specified

Symbol	Parameter	Conditions	Min	Typ	Max	Units
t_{PHL}	Propagation Delay Time High-to-Low Level	$V_{DD} = 5V$		60	110	ns
		$V_{DD} = 10V$		25	55	ns
		$V_{DD} = 15V$		20	30	ns
t_{PLH}	Propagation Delay Time Low-to-High Level	$V_{DD} = 5V$		60	120	ns
		$V_{DD} = 10V$		30	55	ns
		$V_{DD} = 15V$		25	45	ns
t_{THL}	Transition Time High-to-Low Level	$V_{DD} = 5V$		30	60	ns
		$V_{DD} = 10V$		20	40	ns
		$V_{DD} = 15V$		15	30	ns
t_{TLH}	Transition Time Low-to-High Level	$V_{DD} = 5V$		60	120	ns
		$V_{DD} = 10V$		30	55	ns
		$V_{DD} = 15V$		25	45	ns
C_{IN}	Input Capacitance	Any Input		5	7.5	pF

*AC Parameters are guaranteed by DC correlated testing.

Schematic Diagrams

CD4049UBM/CD4049UBC
1 of 6 Identical Units

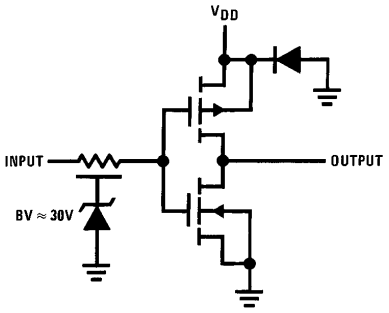

TL/F/5971–3

CD4050BM/CD4050BC
1 of 6 Identical Units

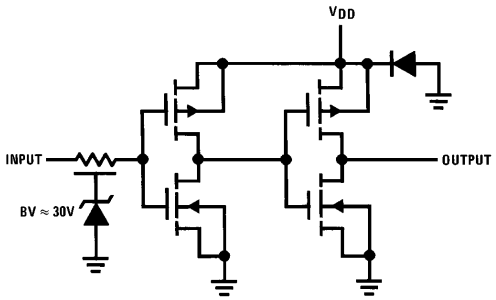

TL/F/5971–4

Switching Time Waveforms

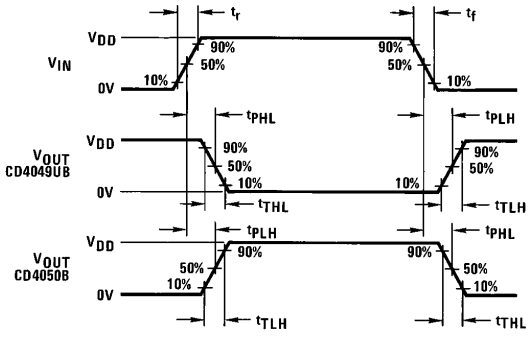

TL/F/5971–5

Typical Applications

CMOS to TTL or CMOS at a Lower V_{DD}

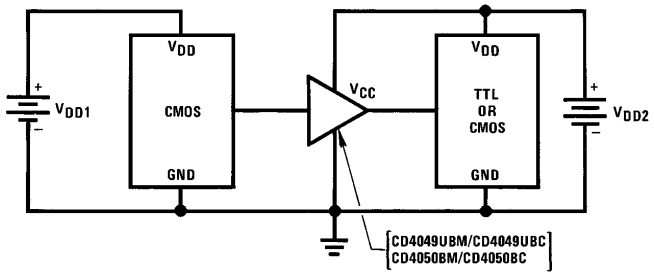

TL/F/5971–6

Note: $V_{DD1} \geq V_{DD2}$

Note: In the case of the CD4049UBM/CD4049UBC the output drive capability increases with increasing input voltage. E.g., If $V_{DD1} = 10V$ the CD4049UBM/CD4049UBC could drive 4 TTL loads.

Physical Dimensions inches (millimeters)

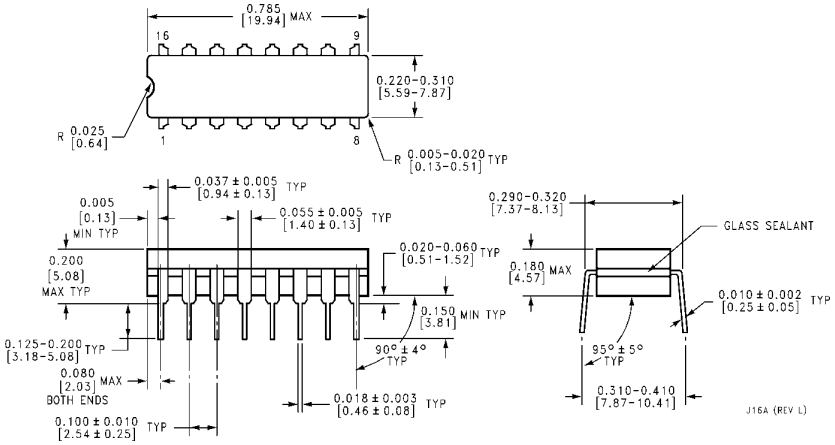

Ceramic Dual-In-Line Package (J)
Order Number CD4049UBMJ, CD4049UBCJ, CD4049BMJ or CD4049BCJ
NS Package Number J16A

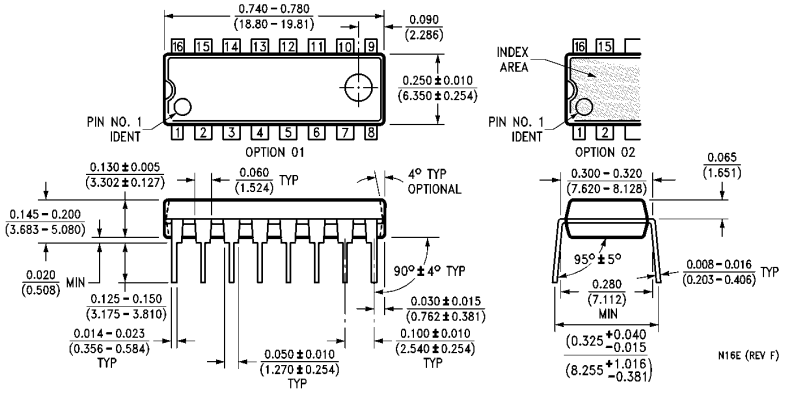

Molded Dual-In-Line Package (N)
Order Number CD4050BMN, CD4050BCN, CD4050BMN or CD4050BCN
NS Package Number N16E

LIFE SUPPORT POLICY

NATIONAL'S PRODUCTS ARE NOT AUTHORIZED FOR USE AS CRITICAL COMPONENTS IN LIFE SUPPORT DEVICES OR SYSTEMS WITHOUT THE EXPRESS WRITTEN APPROVAL OF THE PRESIDENT OF NATIONAL SEMICONDUCTOR CORPORATION. As used herein:

1. Life support devices or systems are devices or systems which, (a) are intended for surgical implant into the body, or (b) support or sustain life, and whose failure to perform, when properly used in accordance with instructions for use provided in the labeling, can be reasonably expected to result in a significant injury to the user.
2. A critical component is any component of a life support device or system whose failure to perform can be reasonably expected to cause the failure of the life support device or system, or to affect its safety or effectiveness.

National Semiconductor Corporation
1111 West Bardin Road
Arlington, TX 76017
Tel: 1(800) 272-9959
Fax: 1(800) 737-7018

National Semiconductor Europe
Fax: (+49) 0-180-530 85 86
Email: cnjwge@tevm2.nsc.com
Deutsch Tel: (+49) 0-180-530 85 85
English Tel: (+49) 0-180-532 78 32
Français Tel: (+49) 0-180-532 93 58
Italiano Tel: (+49) 0-180-534 16 80

National Semiconductor Hong Kong Ltd.
13th Floor, Straight Block,
Ocean Centre, 5 Canton Rd.
Tsimshatsui, Kowloon
Hong Kong
Tel: (852) 2737-1600
Fax: (852) 2736-9960

National Semiconductor Japan Ltd.
Tel: 81-043-299-2309
Fax: 81-043-299-2408

National does not assume any responsibility for use of any circuitry described, no circuit patent licenses are implied and National reserves the right at any time without notice to change said circuitry and specifications.

ENTEGRECİ

Bu belge www.entegreci.com üzerinden sunulmaktadır.

Elektronik komponent tedarikinde Entegreci

Entegreci, Eskişehir merkezli, Türkiye geneline satış yapan bir elektronik komponent mağazasıdır. Entegreler (IC), mikrodenetleyiciler, transistörler, diyotlar, pasif elemanlar, konnektörler, modüller ve geliştirme kartları tek adetten seri üretim adetlerine kadar satılır. Ürün sayfalarında güncel stok durumunu, fiyatı ve datasheet bağlantısını bulabilirsiniz.

Parça koduyla arama

Üretici parça numarasını yazın; stok ve fiyatı hemen görün.

www.entegreci.com

Ürün kategorileri

Entegreden kapasitöre tüm elektronik komponent kategorileri.

Kategorilere göz atın

Üreticiler

Aradığınız üreticinin ürünlerini tek sayfada inceleyin.

Üreticileri görün

Toplu alım ve teklif

Listede olmayan ya da yüksek adetli parçalar için teklif isteyin.

Teklif isteyin

www.entegreci.com | **destek@entegreci.com** | **0850 305 90 34**

Entegreci is an online electronic components store based in Türkiye. Search by manufacturer part number to see stock, prices and datasheets for integrated circuits, microcontrollers, transistors, passive components and connectors, or request a quote for parts that are not listed.

Bu sayfa Entegreci tarafından eklenmiştir. Belgenin önceki sayfaları asıl yayıncısına aittir ve içeriği değiştirilmemiştir; en güncel sürüm için belgenin yayıncısına başvurun.