VN340SP

QUAD HIGH SIDE SMART POWER SOLID STATE RELAY

TYPE	V_{demag}(*)	R_{DSon} (*)	I_{out} (*)	V_{cc}
VN340SP	Vcc-55V	0.2Ω	0.7A	36 V

(*) Per channel

- OUTPUT CURRENT : 0.7A PER CHANNEL
- DIGITAL I/O's CLAMPED AT 32V MINIMUM VOLTAGE
- SHORTED LOAD AND OVERTEMPERATURE PROTECTIONS
- PROTECTION AGAINST LOSS OF GROUND
- BUILT-IN CURRENT LIMITER
- UNDERVOLTAGE SHUT-DOWN
- OPEN DRAIN DIAGNOSTIC OUTPUT
- FAST DEMAGNETIZATION OF INDUCTIVE LOADS
- CONFORMS TO IEC 1131-2

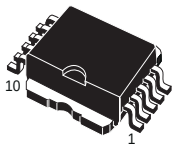

PowerSO-10™

DESCRIPTION

The VN340SP is a monolithic device made using STMicroelectronics VIPower technology, intended for driving four indipendent resistive or inductive loads with one side connected to ground. Active current limitation avoids dropping the system power supply in case of shorted load. Built-in thermal shut-down protects the chip from overtemperature and short circuit. The open drain diagnostic output indicates overtemperature conditions. Each I/O is pulled down when overtemperature condition of the relative channel is verified.

Obsolete Product(s) Obsolete Product(s)

BLOCK DIAGRAM

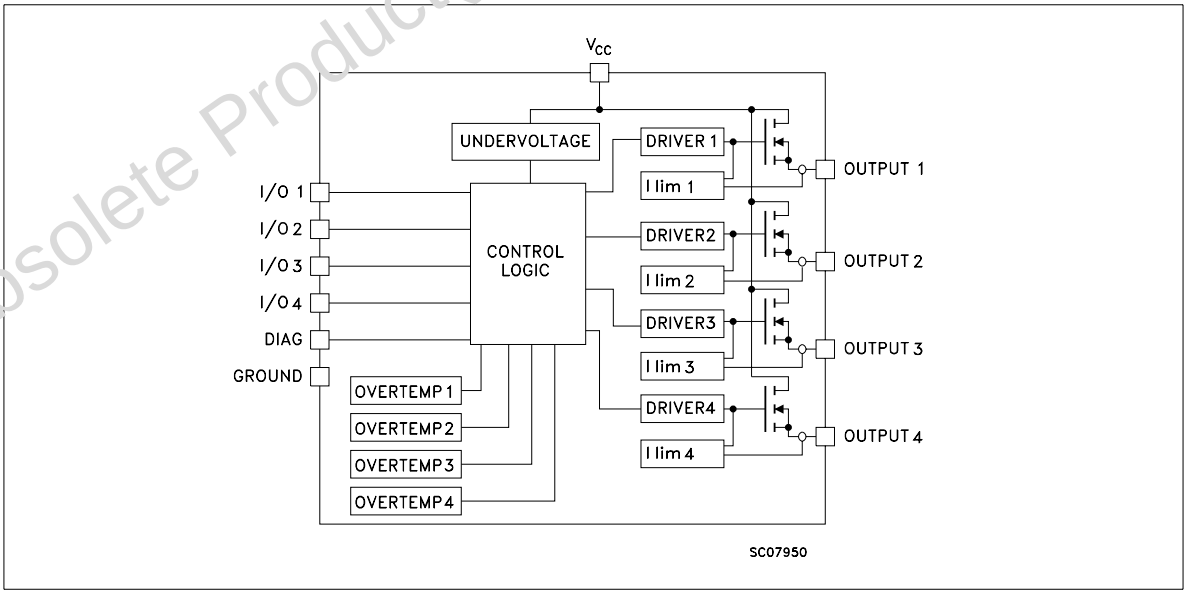

ABSOLUTE MAXIMUM RATING

Symbol	Parameter	Value	Unit
V_{CC}	Power supply voltage	45	V
$-V_{CC}$	Reverse supply voltage	-4	V
I_{OUT}	Output current (continuous)	Internally limited	A
I_R	Reverse output current (per channel)	-6	A
I_{IN}	Input current (per channel)	± 10	mA
I_{DIAG}	Diag pin current	±10	mA
V_{ESD}	Electrostatic discharge (R=1.5KΩ; C=100pF)	2000	V
E_{AS}	Single pulse avalanche energy per channel not simultaneously (see figure 1)	400	mJ
P_{tot}	Power dissipation at T_c=25°C	Internally limited	W
T_j	Junction operating temperature	Internally limited	°C
T_{stg}	Storage temperature	-55 to 150	°C

CONNECTION DIAGRAM TOP VIEW

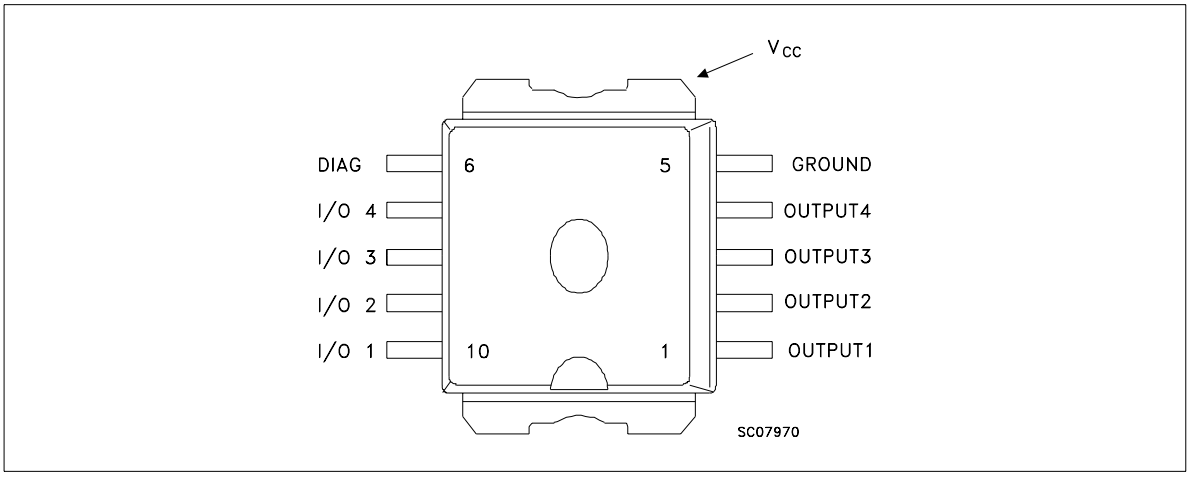

CURRENT AND VOLTAGE CONVENTIONS

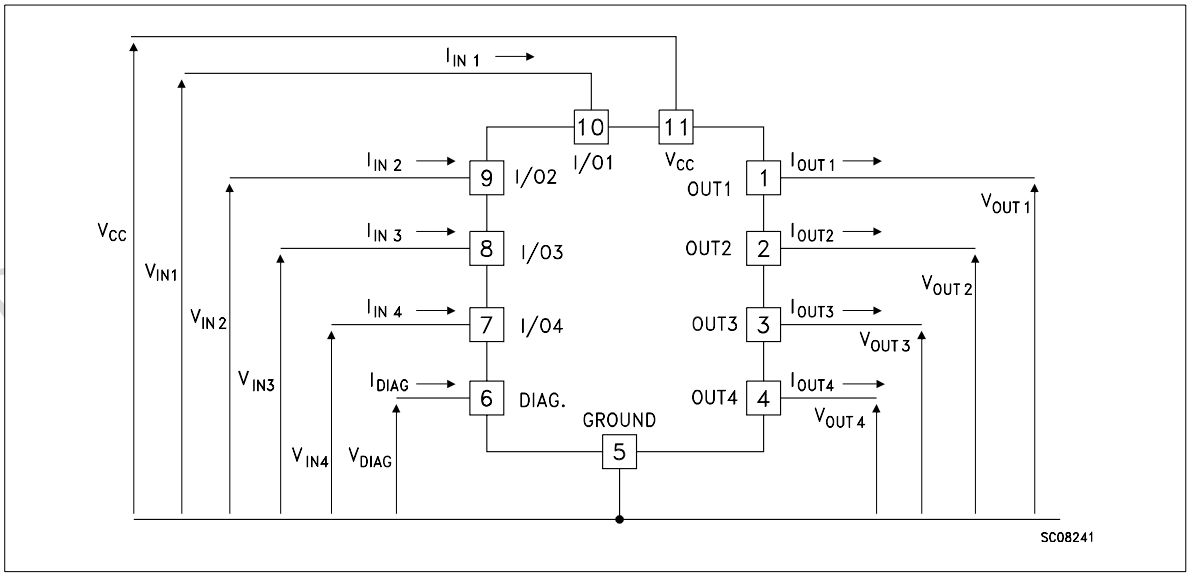

THERMAL DATA

Symbol	Parameter		Value	Unit
$R_{thj\text{-}case}$	Thermal resistance junction-case (1)	(MAX)	3	°C/W
$R_{thj\text{-}amb}$	Thermal resistance junction-ambient ($)	(MAX)	50	°C/W

(1) Per channel
($) When mounted using minimum recommended pad size on FR-4 board

ELECTRICAL CHARACTERISTICS ($10V<V_{CC}<36V; -25°C<T_j<85°C$; unless otherwise specified)

POWER

Symbol	Parameter	Test Conditions	Min	Typ	Max	Unit
V_{CC}	Supply voltage		10		36	V
R_{ON}	On state resistance	I_{OUT}=0.5A; T_j=25°C			0.2	Ω
		I_{OUT}=0.5A; -25°C<T_j<85°C			0.32	Ω
		I_{OUT}=0.5A; T_j=125°C			0.4	Ω
I_S	Supply current	All channels off			1	mA
		On state; V_{IN}=30V; I_{OUTn}=0V				
		(T_j=125°C)			6	mA
V_{OL}	Low state output voltage	$V_{IN}=V_{IL}$; $R_{LOAD}\geq 10M\Omega$			1.5	V
V_{demag}	Output voltage at turn-off	I_{OUT}=0.5A; L_{LOAD}=1mH	V_{CC}-65	V_{CC}-55	V_{CC}-45	V
I_{LGND}	Output current at turn-off	$V_{CC}=V_{INn}=V_{GND}=V_{STAT}$=18 to 30V			2	mA
		T_{amb}=-25°C to 85°C (*)				

(*) see test configuration and application description

SWITCHING (V_{CC}=24V)

Symbol	Parameter	Test Conditions	Min	Typ	Max	Unit
$t_{d(on)}$	Turn-on delay time of Output current	I_{OUT}=0.5A, Resistive Load Input rise time <0.1µs, T_j=25°C		52	100	µs
t_r	Rise time of Output current	I_{OUT}=0.5A, Resistive Load Input rise time <0.1µs, T_j=25°C		94	250	µs
$t_{d(off)}$	Turn-off delay time of Output current	I_{OUT}=0.5A, Resistive Load Input rise time <0.1µs, T_j=25°C		34	50	µs
t_f	Fall time of Output current	I_{OUT}=0.5A, Resistive Load Input rise time <0.1µs, T_j=25°C		8	20	µs

ELECTRICAL CHARACTERISTICS (continued)

LOGIC INPUT (Per each channel)

Symbol	Parameter	Test Conditions	Min	Typ	Max	Unit
V_{IL}	I/O Input low level voltage				2	V
V_{IH}	I/O Input high level voltage (see note 1)		3.5			V
$V_{I(HYST)}$	I/O Input hysteresis voltage			0.5		V
I_{IN}	I/O Input current	V_{IN}=30V			25	µA
V_{ICL}	I/O Input clamp voltage (see note 1)	I_{IN}=1mA I_{IN}=-1mA	32	36 -0.7		V V

Note 1 : The input voltage is internally clamped at 32V minimum , it is possible to connect the input pins to an higher voltage via an external resistor calculate to not exceed 10mA.

PROTECTION AND DIAGNOSTICS

Symbol	Parameter	Test Conditions	Min	Typ	Max	Unit
$V_{DIAG\ (*)}$	Status voltage output low	I_{STAT}=5mA (Fault condition)			1	V
V_{SCL}(*)	Status clamp voltage	I_{DIAG}=1mA I_{DIAG}=-1mA	32	36 -0.7		V V
V_{USD}	Undervoltage shut down		5		8	V
I_{LIM}	DC Short circuit current	V_{CC}=24V; R_{LOAD}<10mΩ	0.7		2	A
I_{OVPK}	Peak short circuit current	V_{CC}=24V; V_{IN}=30V; R_{LOAD}<10mΩ (see figure 2)			4	A
I_{DIAGH}	Leakage on diag pin in high state	V_{DIAG}=24V			25	µA
I_{LOAD}	Output leakage current	V_{CC}=10 to 36V; V_{IN}=V_{IL}			50	µA
t_{SC}	Delay time of current limiter				100	µs
T_{TSD}	Thermal shut down temperature		150	170		°C
T_R	Thermal reset temperature		135	155		°C

(*) Status determination > 100µs after the switching edge.

Note: If INPUT pin is floating the corrisponding channel will automatically switch off. If GND pin is disconnected, the channel will switch off provided V_{CC} not exceed 36V.

FIGURE 1: Avalanche Energy Test Circuit

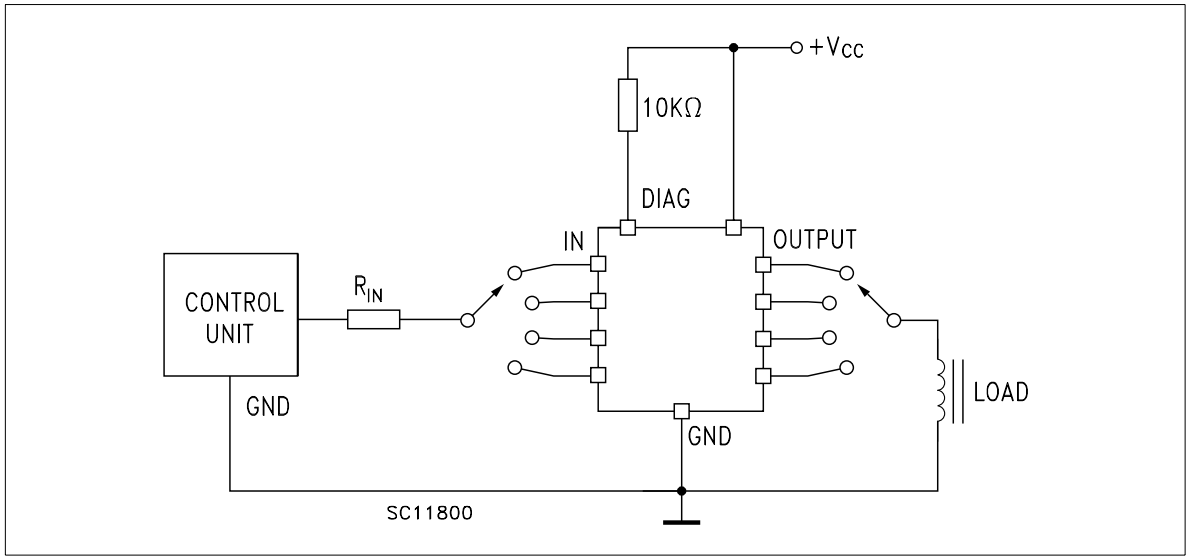

FIGURE 2: Peak Short Circuit Current Test Circuit

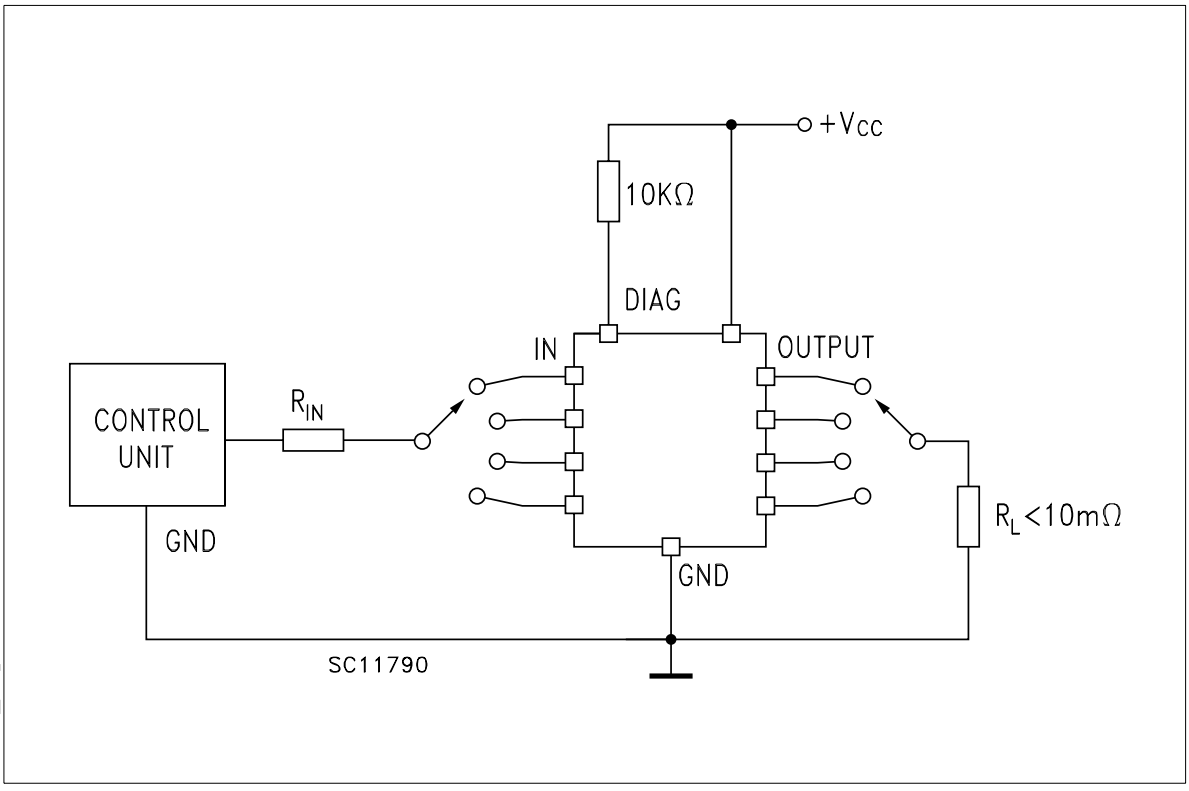

THRUTH TABLE

	MCOUTn	I/On	OUTPUTn	DIAGNOSTIC
Normal operation	L H	L H	L H	H H
Overtemperature	L H	L L	L L	H L
Undervoltage	L H	L H	L L	H H
Shorted load (Current limitation)	L H	L H	L H	H H

Figure 3: Switching Waveforms

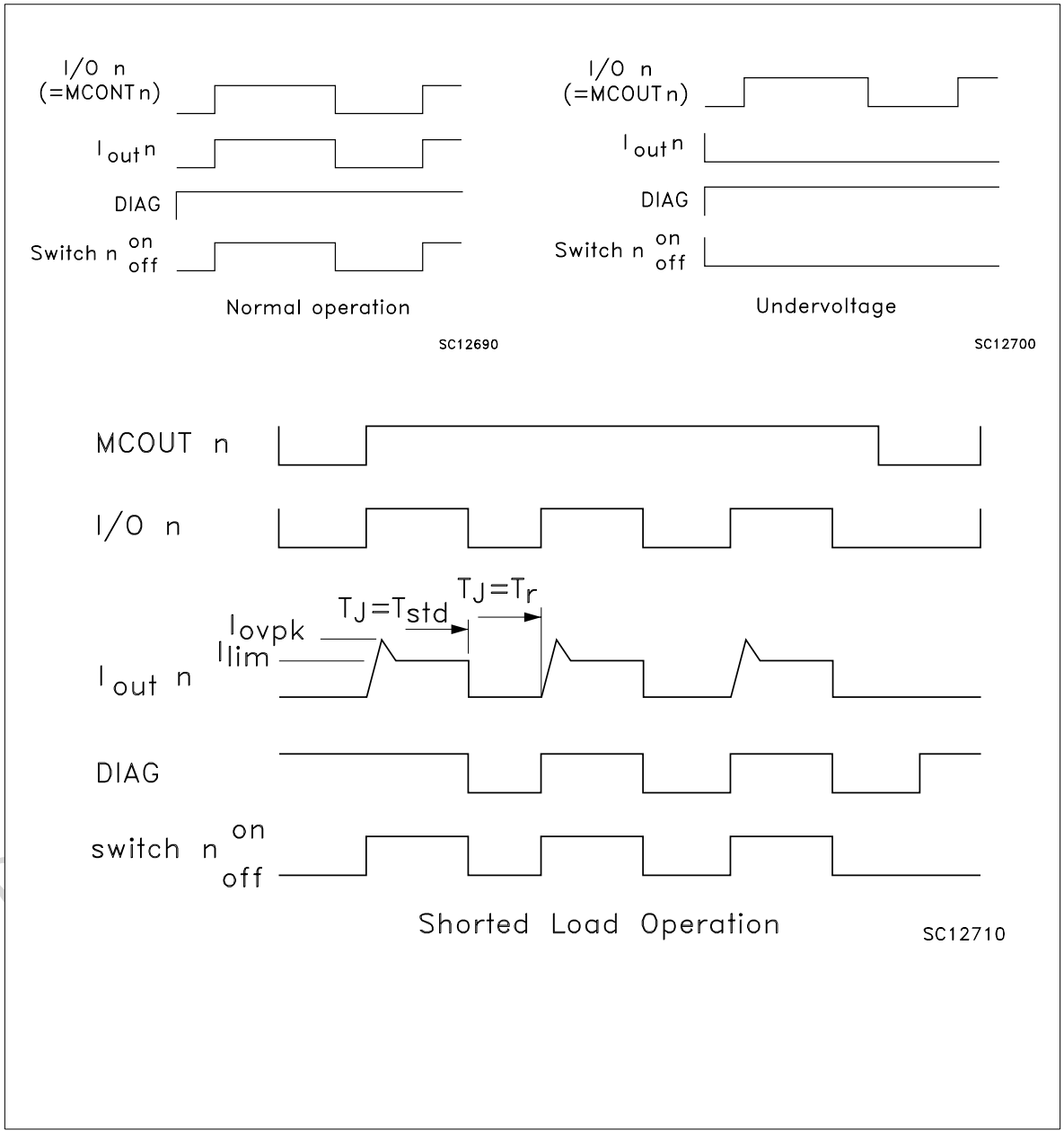

SWITCHING PARAMETERS TEST CONDITIONS

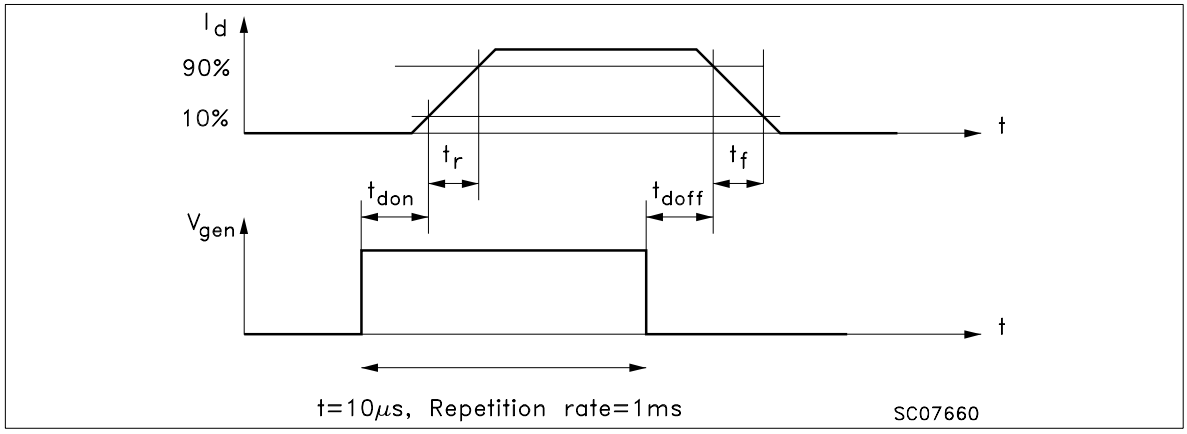

DRIVING CIRCUIT

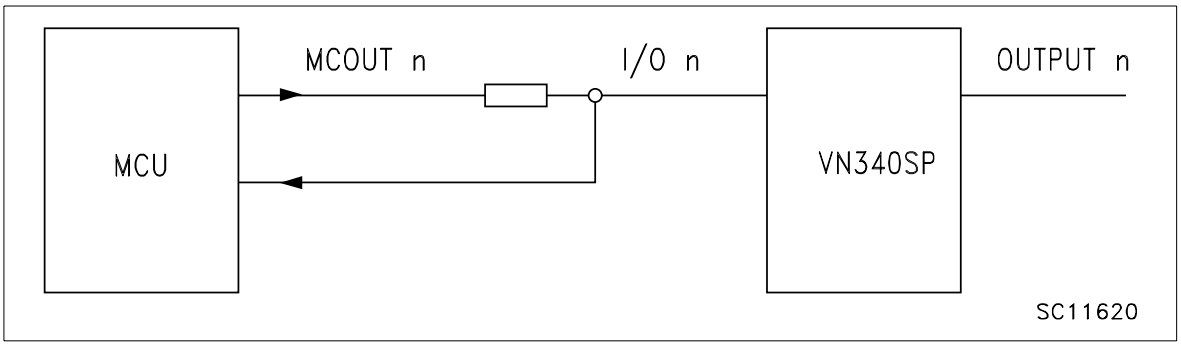

Fig. 4: I_{LGND} Test Configuration

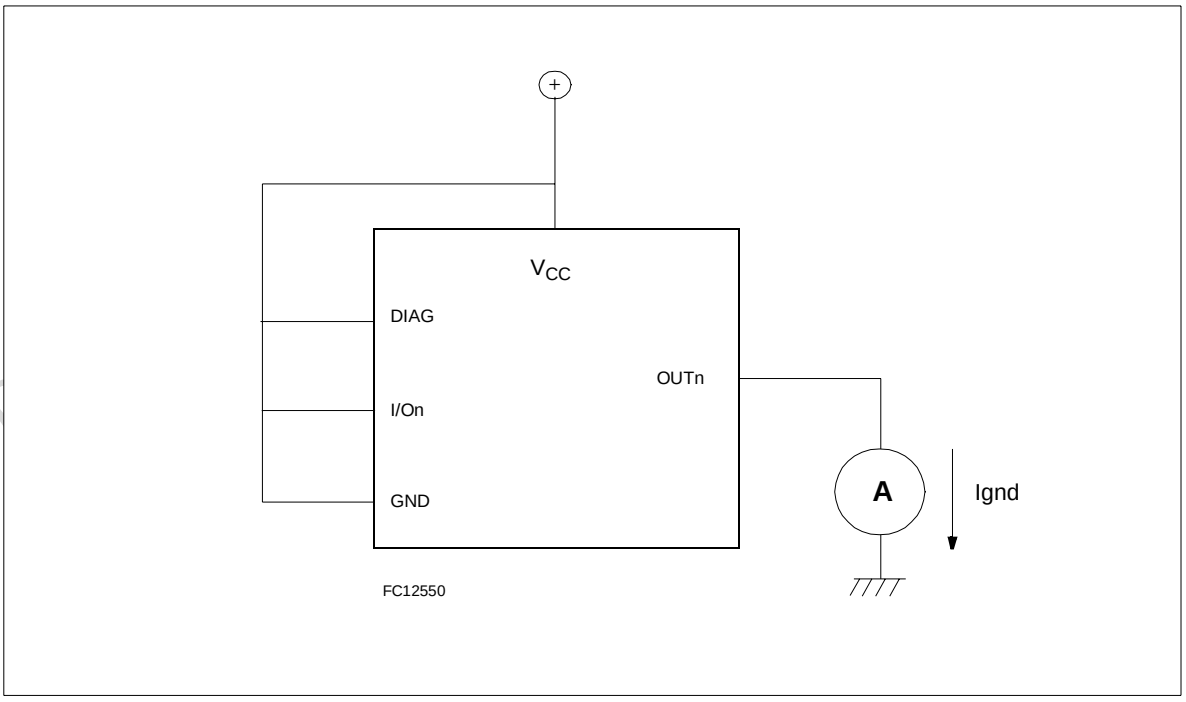

PowerSO-10™ MECHANICAL DATA

DIM.	mm.			inch		
	MIN.	TYP	MAX.	MIN.	TYP.	MAX.
A	3.35		3.65	0.132		0.144
A (*)	3.4		3.6	0.134		0.142
A1	0.00		0.10	0.000		0.004
B	0.40		0.60	0.016		0.024
B (*)	0.37		0.53	0.014		0.021
C	0.35		0.55	0.013		0.022
C (*)	0.23		0.32	0.009		0.0126
D	9.40		9.60	0.370		0.378
D1	7.40		7.60	0.291		0.300
E	9.30		9.50	0.366		0.374
E2	7.20		7.60	0.283		300
E2 (*)	7.30		7.50	0.287		0.295
E4	5.90		6.10	0.232		0.240
E4 (*)	5.90		6.30	0.232		0.248
e		1.27			0.050	
F	1.25		1.35	0.049		0.053
F (*)	1.20		1.40	0.047		0.055
H	13.80		14.40	0.543		0.567
H (*)	13.85		14.35	0.545		0.565
h		0.50			0.002	
L	1.20		1.80	0.047		0.070
L (*)	0.80		1.10	0.031		0.043
α	0º		8º	0º		8º
α (*)	2º		8º	2º		8º

(*) Muar only POA P013P

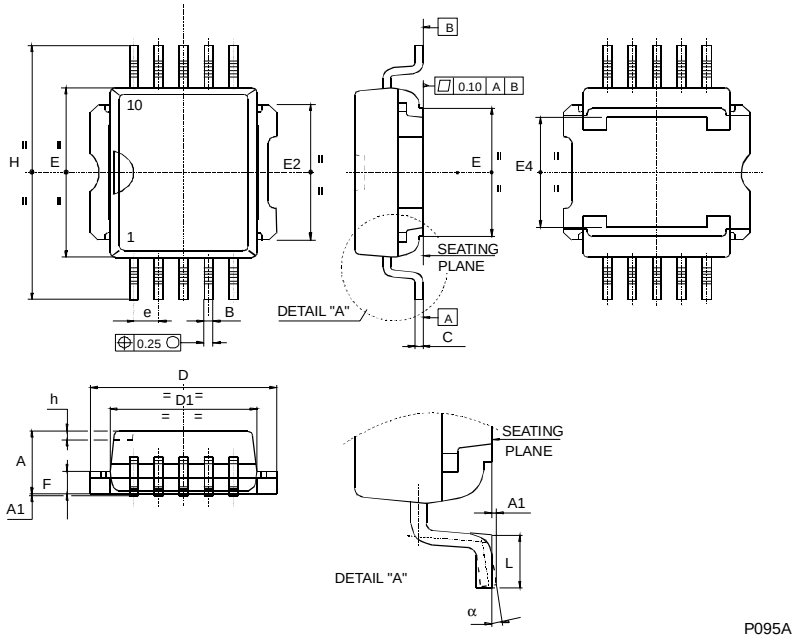

P095A

Obsolete Product(s)

Information furnished is believed to be accurate and reliable. However, STMicroelectronics assumes no responsibility for the consequences of use of such information nor for any infringement of patents or other rights of third parties which may results from its use. No license is granted by implication or otherwise under any patent or patent rights of STMicroelectronics. Specifications mentioned in this publication are subject to change without notice. This publication supersedes and replaces all information previously supplied. STMicroelectronics products are not authorized for use as critical components in life support devices or systems without express written approval of STMicroelectronics.
The ST logo is a trademark of STMicroelectronics

© 2000 STMicroelectronics - Printed in ITALY- All Rights Reserved.

STMicroelectronics GROUP OF COMPANIES
Australia - Brazil - China - Finland - France - Germany - Hong Kong - India - Italy - Japan - Malaysia - Malta - Morocco - Singapore - Spain - Sweden - Switzerland - United Kingdom - U.S.A.

http://www.st.com

ENTEGRECİ

Bu belge www.entegreci.com üzerinden sunulmaktadır.

Elektronik komponent tedarikinde Entegreci

Entegreci, Eskişehir merkezli, Türkiye geneline satış yapan bir elektronik komponent mağazasıdır. Entegreler (IC), mikrodenetleyiciler, transistörler, diyotlar, pasif elemanlar, konnektörler, modüller ve geliştirme kartları tek adetten seri üretim adetlerine kadar satılır. Ürün sayfalarında güncel stok durumunu, fiyatı ve datasheet bağlantısını bulabilirsiniz.

Parça koduyla arama

Üretici parça numarasını yazın; stok ve fiyatı hemen görün.

www.entegreci.com

Ürün kategorileri

Entegreden kapasitöre tüm elektronik komponent kategorileri.

Kategorilere göz atın

Üreticiler

Aradığınız üreticinin ürünlerini tek sayfada inceleyin.

Üreticileri görün

Toplu alım ve teklif

Listede olmayan ya da yüksek adetli parçalar için teklif isteyin.

Teklif isteyin

www.entegreci.com | **destek@entegreci.com** | **0850 305 90 34**

Entegreci is an online electronic components store based in Türkiye. Search by manufacturer part number to see stock, prices and datasheets for integrated circuits, microcontrollers, transistors, passive components and connectors, or request a quote for parts that are not listed.

Bu sayfa Entegreci tarafından eklenmiştir. Belgenin önceki sayfaları asıl yayıncısına aittir ve içeriği değiştirilmemiştir; en güncel sürüm için belgenin yayıncısına başvurun.