UC3842A/UC3843A

SMPS Controller

Features

- Low Start Current 0.2mA (typ)
- Operating Range Up To 500KHz
- Cycle by Cycle Current Limiting
- Under Voltage Lock Out With Hysteresis
- Short Shutdown Delay Time: typ.100ns
- High Current Totem-pole Output
- Output Swing Limiting: 22V

Description

The UC3842A/UC3843A are fixed PWM controller for Off-Line and DC to DC converter applications. The internal circuits include UVLO, low start up current circuit, temperature compensated reference, high gain error amplifier, current sensing comparator, and high current totem-pole output for driving a POWER MOSFET. Also UC3842A/ UC3843A provide low start up current below 0.3mA and short shutdown delay time typ. 100ns. The UC3842A has UVLO threshold of 16V(on) and 10V(off). The UC3843A is 8.4V(on) and 7.6V(off). The UC3842A and UC3843A can operate within 100% duty cycle.

8-DIP



8-SOP



Internal Block Diagram

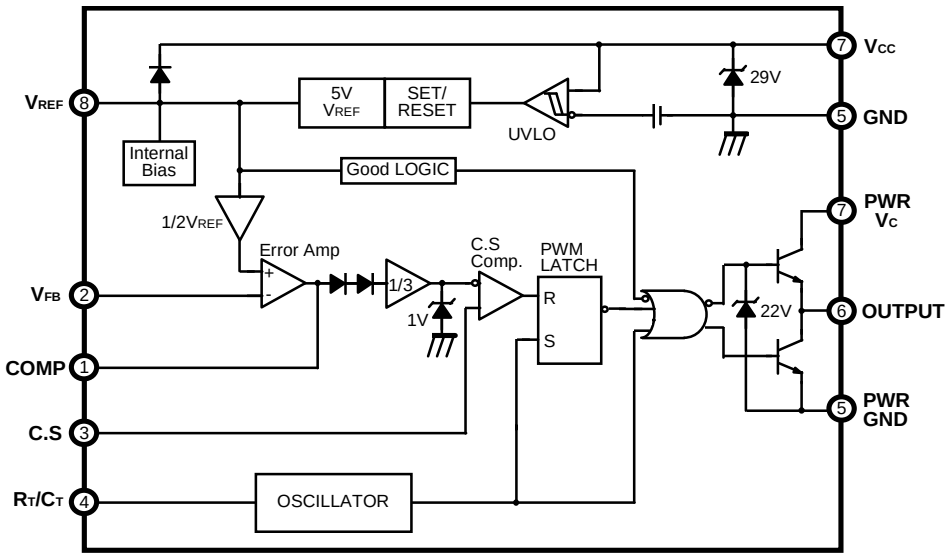

Rev. 5.0

©2000 Fairchild Semiconductor International

Absolute Maximum Ratings

Parameter	Symbol	Value	Unit
Supply Voltage	V_{CC}	30	V
Output Current	I_O	± 1	A
Analog Inputs (pin 2, 3)	$V_{I(ANA)}$	- 0.3 to 6.3	V
Error Amp. Output Sink Current	$I_{SINK(EA)}$	10	mA
Power Dissipation	P_D	1	W

Electrical Characteristics

(V_{CC} = 15V, R_T = 10KΩ, C_T = 3.3nF, T_A = 0°C to + 70°C ,Unless otherwise specified)

Parameter	Symbol	Conditions	Min.	Typ.	Max.	Unit
REFERENCE SECTION						
Output Voltage	V_{REF}	T_J = 25°C, I_O = 1mA	4.9	5.0	5.1	V
Line Regulation	ΔV_{REF}	V_{CC} = 12V to 25V	-	6	20	mV
Load Regulation	ΔV_{REF}	I_O = 1mA to 20mA	-	6	25	mV
Output Short Circuit	I_{SC}	T_a = 25°C	-	- 100	- 180	mA
OSILLATOR SECTION						
Initial Accuracy	F_{OSC}	T_J = 25°C	47	52	57	KHz
Voltage Stability	ST_V	V_{CC} = 12V to 25V	-	0.2	1	%
Amplitude	V_{OSC}	V_{PIN4}, Peak to Peak	-	1.7	-	V
Discharge Current	I_{DISCHG}	T_J = 25°C, Pin4 = 2V	7.8	8.3	8.8	mA
CURRENT SENSE SECTION						
Gain	G_V	(NOTE 2, 3)	2.85	3	3.15	V/V
Maximum Input Signal	$V_{I(MAX)}$	V_{PIN1} = 5V(NOTE 2)	0.9	1.0	1.1	V
PSRR	PSRR	V_{CC} = 12V to 25V (NOTE 1, 2)	-	70	-	dB
Input Bias Current	I_{BIAS}	-	-	- 2	-10	uA
Delay to Output	T_D	V_{PIN3} = 0 V to 2V (NOTE1)	-	100	200	ns

Electrical Characteristics (Continued)

(V_{CC} = 15V, R_T = 10KΩ, C_T = 3.3nF, T_A = 0°C to + 70°C, Unless otherwise specified)

Parameter	Symbol	Conditions	Min.	Typ.	Max.	Unit
ERROR AMPLIFIER SECTION						
Input Voltage	V_I	T_{PIN1} = 2.5V	2.42	2.50	2.58	V
Input Bias Current	I_{BIAS}	-	-	-0.3	- 2	uA
Open Loop Gain	G_{VO}	V_O = 2V to 4V (NOTE 1)	65	90	-	dB
Unity Gain Bandwidth	GBW	T_J= 25°C (NOTE 1)	0.7	1	-	MHz
PSRR	PSRR	V_{CC} = 12V to 25V (NOTE 1)	60	70	-	dB
Output Sink Current	I_{SINK}	V_{PIN2} = 2.7V V_{PIN1} = 1.1V	2	6	-	mA
Output Source Current	I_{SOURCE}	V_{PIN2} = 2.3V V_{PIN1} = 5.0V	-0.5	-0.8	-	mA
Output High Voltage	V_{OH}	V_{PIN2} = 2.3V R1 = 15KΩ to GND	5	6	-	V
Output Low Voltage	V_{OL}	V_{PIN2} = 2.7V R1 = 15KΩ to Pin8	-	0.8	1.1	V
OUTPUT SECTION						
Output Low Level	V_{OL}	I_{SINK} = 20mA	-	0.1	0.4	V
		I_{SINK} = 200mA	-	1.5	2.2	V
Output High Level	V_{OH}	I_{SOURCE} = 20mA	13	13.5	-	V
		I_{SOURCE} = 200mA	12	13.5	-	V
Rise Time	t_R	T_J = 25°C, C1 = 1nF (NOTE 1)	-	40	100	ns
Fall Time	t_F	T_J = 25°C, C1 = 1nF (NOTE 1)	-	40	100	ns
Output Voltage Swing Limit	V_{OLIM}	V_{CC} = 27V, C1 = 1nF	-	22	-	V
UNDER VOLTAGE LOCKOUT SECTION						
Start Threshold	V_{TH}	UC3842A	15	16	17	V
		UC3843A	7.8	8.4	9.0	V
Min. Operating Voltage (After turn on)	V_{TL}	UC3842A	9	10	11	V
		UC3843A	7.0	7.6	8.2	V
PWM SECTION						
Maximum Duty Cycle	D_{MAX}	UC3842A/UC3843A	94	96	100	%
Minimum Duty Cycle	D_{MIN}	-	-	-	0	%
TOTAL STANDBY CURRENT						
Start-Up Current	I_{ST}	-	-	0.2	0.4	mA
Operating Supply Current	I_{CC}	V_{PIN2} = V_{PIN3} = 0V	-	11	17	mA
V_{CC} Zener Voltage	V_Z	I_{CC} = 25mA	-	29	-	V

* Adjust V_{CC} above the start threshold before setting at 15V

Notes :

1. These parameters, although guaranteed, are not 100% tested in production.
2. Parameter measured at trip point of latch with V2 = 0V.
3. Gain defined as: $G_V = \Delta V_{PIN1} \Delta V_{PIN3} (V_{PIN3}$ = 0 to 0.8V)

Mechanical Dimensions

Package

8-DIP

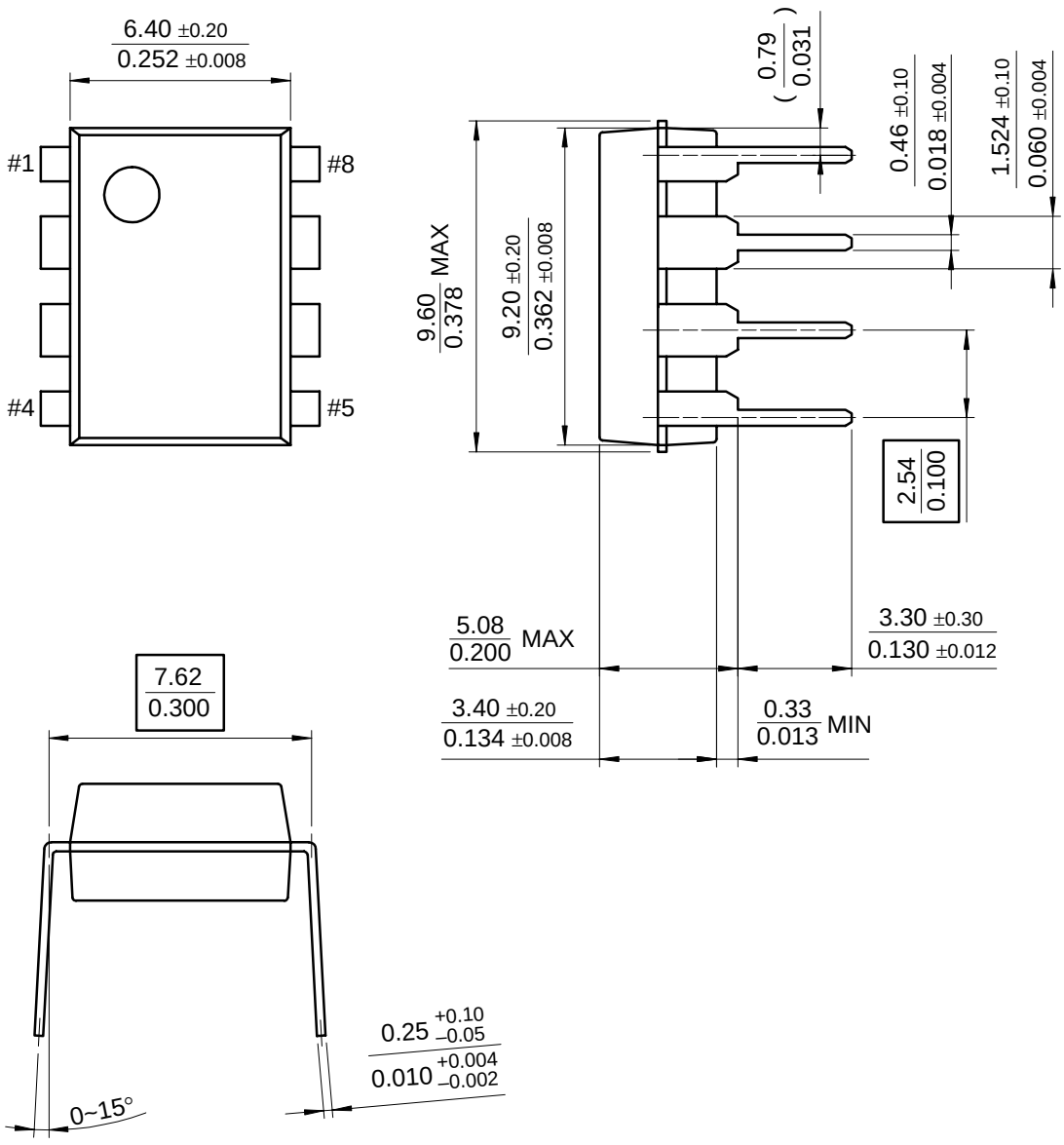

Mechanical Dimensions (Continued)

Package

8-SOP

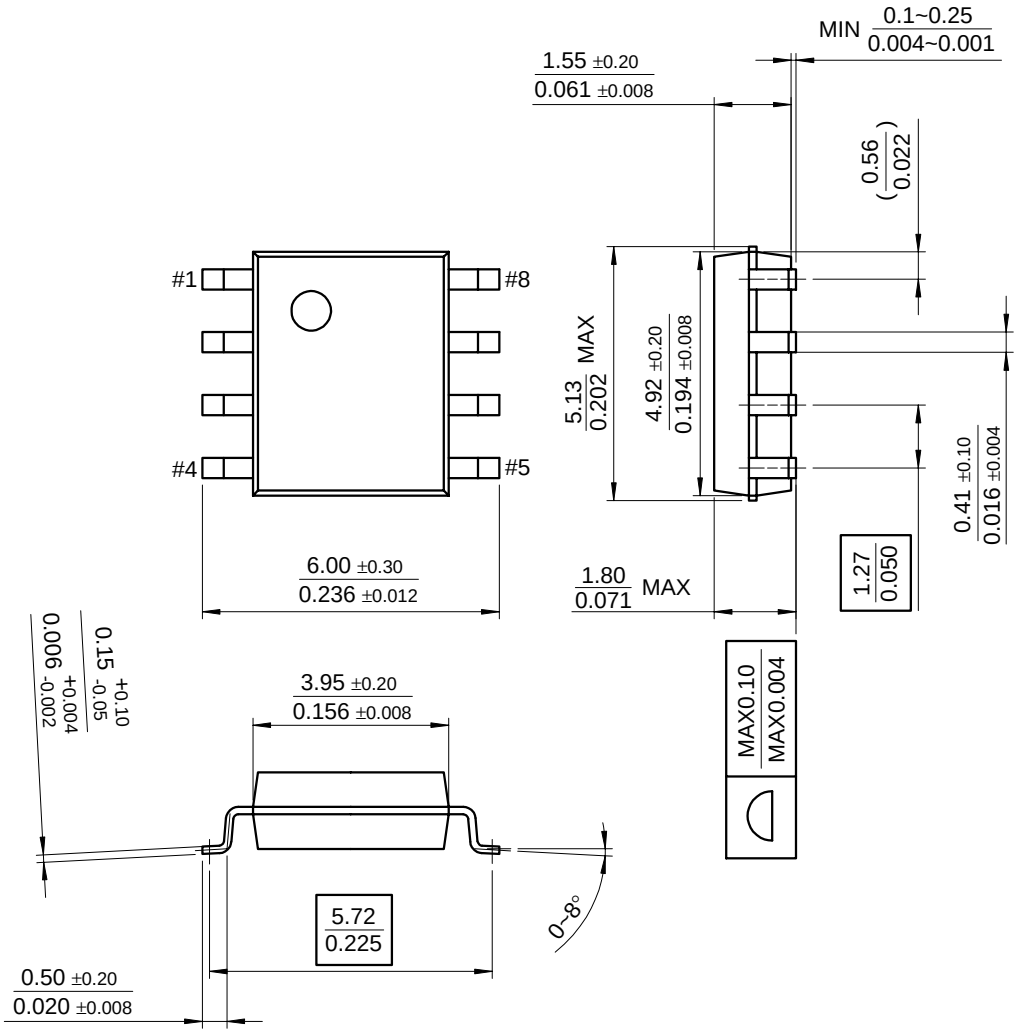

Ordering Information

Product Number	Package	Operating Temperature
UC3842AN	8 DIP	0 ~ + 70℃
UC3842AD	8 SOP	
UC3843AN	8 DIP	
UC3843AD	8 SOP	

LIFE SUPPORT POLICY

FAIRCHILD'S PRODUCTS ARE NOT AUTHORIZED FOR USE AS CRITICAL COMPONENTS IN LIFE SUPPORT DEVICES OR SYSTEMS WITHOUT THE EXPRESS WRITTEN APPROVAL OF THE PRESIDENT OF FAIRCHILD SEMICONDUCTOR INTERNATIONAL. As used herein:

1. Life support devices or systems are devices or systems which, (a) are intended for surgical implant into the body, or (b) support or sustain life, and (c) whose failure to perform when properly used in accordance with instructions for use provided in the labeling, can be reasonably expected to result in a significant injury of the user.
2. A critical component in any component of a life support device or system whose failure to perform can be reasonably expected to cause the failure of the life support device or system, or to affect its safety or effectiveness.

7/12/00 0.0m 001
Stock#DSxxxxxxxx
" 2000 Fairchild Semiconductor International

ENTEGRECİ

Bu belge www.entegreci.com üzerinden sunulmaktadır.

Elektronik komponent tedarikinde Entegreci

Entegreci, Eskişehir merkezli, Türkiye geneline satış yapan bir elektronik komponent mağazasıdır. Entegreler (IC), mikrodenetleyiciler, transistörler, diyotlar, pasif elemanlar, konnektörler, modüller ve geliştirme kartları tek adetten seri üretim adetlerine kadar satılır. Ürün sayfalarında güncel stok durumunu, fiyatı ve datasheet bağlantısını bulabilirsiniz.

Parça koduyla arama

Üretici parça numarasını yazın; stok ve fiyatı hemen görün.

www.entegreci.com

Ürün kategorileri

Entegreden kapasitöre tüm elektronik komponent kategorileri.

Kategorilere göz atın

Üreticiler

Aradığınız üreticinin ürünlerini tek sayfada inceleyin.

Üreticileri görün

Toplu alım ve teklif

Listede olmayan ya da yüksek adetli parçalar için teklif isteyin.

Teklif isteyin

www.entegreci.com | **destek@entegreci.com** | **0850 305 90 34**

Entegreci is an online electronic components store based in Türkiye. Search by manufacturer part number to see stock, prices and datasheets for integrated circuits, microcontrollers, transistors, passive components and connectors, or request a quote for parts that are not listed.

Bu sayfa Entegreci tarafından eklenmiştir. Belgenin önceki sayfaları asıl yayıncısına aittir ve içeriği değiştirilmemiştir; en güncel sürüm için belgenin yayıncısına başvurun.