FAIRCHILD
A Schlumberger Company

μA741QB
Operational Amplifier

MIL-STD-883
July 1986—Rev 2[5]

Aerospace and Defense Data Sheet
Linear Products

Description

The μA741QB is a high performance monolithic operational amplifier constructed using the Fairchild Planar Epitaxial process. It is intended for a wide range of analog applications. High common mode voltage range and absence of latch-up tendencies make the μA741QB ideal for use as a voltage follower. The high gain and wide range of operating voltage provide superior performance in integrator, summing amplifier, and general feedback applications.[6]

- **No Frequency Compensation Required**
- **Short Circuit Protection**
- **Offset Voltage Null Capability**
- **Large Common Mode And Differential Voltage Ranges**
- **Low Power Consumption**
- **No Latch-Up**

Connection Diagram
10-Lead Flatpak
(Top View)

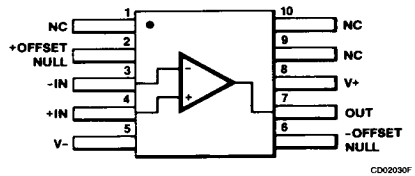

Connection Diagram
14-Lead DIP
(Top View)

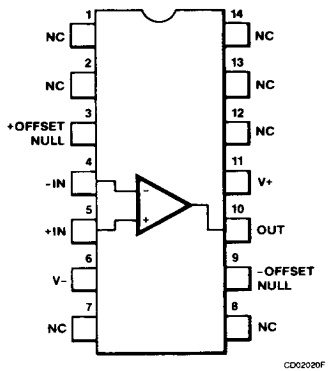

Connection Diagram
8-Lead Can
(Top View)

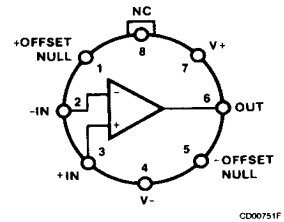

Lead 4 connected to case.

Connection Diagram
8-Lead DIP
(Top View)

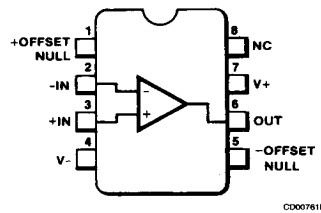

Order Information

Part No.	Case/ Finish	Package Code Mil-M-38510, Appendix C
μA741DMQB	CA	D-1 14-Lead DIP
μA741HMQB	GC	A-1 8-Lead Can
μA741FMQB	HA	F-4 10-Lead Flatpak
μA741RMQB	PA	D-4 8-Lead DIP
JAN Product Available		
10101	BCA	D-1 14-Lead DIP
10101	BCB	D-1 14-Lead DIP
10101	BGA	A-1 8-Lead Can
10101	BGC	A-1 8-Lead Can
10101	BHA	F-4 10-Lead Flatpak
10101	BHB	F-4 10-Lead Flatpak
10101	BPA	D-4 8-Lead DIP
10101	BPB	D-4 8-Lead DIP

14

This Material Copyrighted By Its Respective Manufacturer

Absolute Maximum Ratings

Storage Temperature Range	−65°C to +175°C
Operating Temperature Range	−55°C to +125°C
Lead Temperature (soldering, 60 s)	300°C
Internal Power Dissipation[11]	
Can and Flatpak	330 mW
DIP	400 mW
Supply Voltage	±22 V
Differential Input Voltage	±30 V
Input Voltage[12]	±20 V
Short Circuit Duration[13]	Indefinite

Processing: MIL-STD-883, Method 5004

Burn-In: Method 1015, Condition A, PDA calculated using Method 5005, Subgroup 1

Quality Conformance Inspection: MIL-STD-883, Method 5005

Group A Electrical Tests Subgroups:

1. Static tests at 25°C
2. Static tests at 125°C
3. Static tests at −55°C
4. Dynamic tests at 25°C
5. Dynamic tests at 125°C
6. Dynamic tests at −55°C
9. AC tests at 25°C
10. AC tests at 125°C
11. AC tests at −55°C

Group C and D Endpoints: Group A, Subgroup 1

Notes

1. 100% Test and Group A
2. Group A
3. Periodic tests, Group C
4. Guaranteed but not tested
5. When changes occur, FSC will make data sheet revisions available. Contact local sales representative for the latest revision.
6. For more information on device function, refer to the Fairchild Linear Data Book Commercial Section.
7. Z_I is guranteed by I_{IB}: $Z_I = 4.0\ V_T/I_{IB}$, $V_T = 26$ mV at 25°C, 34 mV at 125°C and 19 mW at −55°C.
8. P_c is guaranteed by I_{CC}: $P_c = 30\ I_{CC}$
9. V_{IR} is guaranteed by the CMR test.
10. BW is guaranteed by t_r: $BW = 0.35/t_r$.
11. Rating applies to ambient temperatures up to 125°C. Above 125°C ambient, derate linearly at 150°C/W for the Can and Flatpak and 120°C/W for the DIP.
12. For supply voltages less than ±20 V, the absolute maximum input voltage is equal to the supply voltage.
13. Short circuit may be to ground or either supply. Rating applies to 125°C case temperature or 75°C ambient temperature.

This Material Copyrighted By Its Respective Manufacturer

μA741QB
Electrical Characteristics $V_{CC} = \pm 15$ V, unless otherwise specified.

Symbol	Characteristic	Condition	Min	Max	Unit	Note	Subgrp
V_{IO}	Input Offset Voltage	50 Ω ≤ R_S ≤ 10 kΩ, V_{CM} = 0 V		5.0	mV	1	1
				6.0	mV	1	2,3
$\Delta V_{IO}/\Delta T$	Input Offset Voltage Temperature Sensitivity	25°C ≤ T_A ≤ 125°C		15	μV/°C	4	2
		−55°C ≤ T_A ≤ +25°C		15	μV/°C	4	3
$V_{IO\ adj}$	Input Offset Voltage Adjustment Range	V_{CC} = ± 20 V	5.0		mV	1	1,2,3
I_{IO}	Input Offset Current	V_{CM} = 0 V		200	nA	1	1,2
				500	nA	1	3
$\Delta I_{IO}/\Delta T$	Input Offset Current Temperature Sensitivity	25°C ≤ T_A ≤ 125°C		1.0	nA/°C	4	2
		−55°C ≤ T_A ≤ +25°C		1.0	nA/°C	4	3
I_{IB}	Input Bias Current	V_{CM} = 0 V		340	nA	1	1
				500	nA	1	2
				1500	nA	1	3
Z_I	Input Impedance[7]		0.3		MΩ	1	1
			0.2		MΩ	1	2
I_{CC}	Supply Current			2.8	mA	1	1
				2.5	mA	1	2
				3.3	mA	1	3
P_c	Power Consumption[8]			85	mW	1	1
				75	mW	1	2
				100	mW	1	3
CMR	Common Mode Rejection	V_{CM} = ± 12 V, R_S = 50 Ω	70		dB	1	1,2,3
V_{IR}	Input Voltage Range[9]		± 12		V	1	1,2,3
PSRR	Power Supply Rejection Ratio	± 5.0 V ≤ V_{CC} ≤ ± 22 V, R_S = 50 Ω		150	μV/V	1	1,2,3
I_{OS}	Output Short Circuit Current			60	mA	1	1,2,3
A_{VS}	Large Signal Voltage Gain	V_O = ± 10 V, R_L = 2.0 kΩ	50		V/mV	1	4
			25		V/mV	1	5,6
V_{OP}	Output Voltage Swing	R_L = 10 kΩ	± 12		V	1	4,5,6
		R_L = 2.0 kΩ	± 10		V	1	4,5,6
$TR(t_r)$	Transient Response — Rise Time	V_{CC} = ± 20 V, V_I = 50 mV, R_L = 2.0 kΩ, C_L = 100 pF, A_V = 1.0		800	ns	3	9, 10, 11
$TR(o_s)$	Transient Response — Overshoot			25	%	3	9, 10, 11
BW	Bandwidth[10]		0.437		MHz	3	9, 10, 11
SR	Slew Rate	V_{CC} = ± 20 V, R_L = 2.0 kΩ, A_V = 1.0	0.3		V/μs	3	9, 10, 11
N_I (BB)	Noise Broadband	V_{CC} = ± 20 V, BW = 5.0 kHz		15	μV_{rms}	4	9
N_i (PC)	Noise Popcorn	V_{CC} = ± 20 V, BW = 5.0 kHz		40	μV_{pk}	4	9

14

This Material Copyrighted By Its Respective Manufacturer

Primary Burn-In Circuit
(38510/10101 may be used by FSC as an alternate)

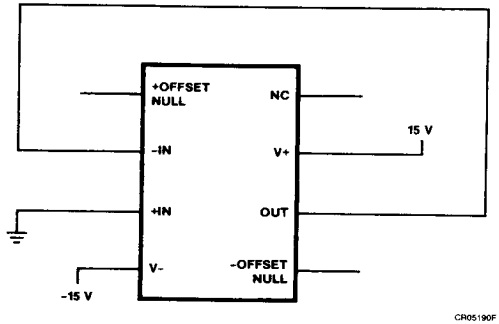

Equivalent Circuit

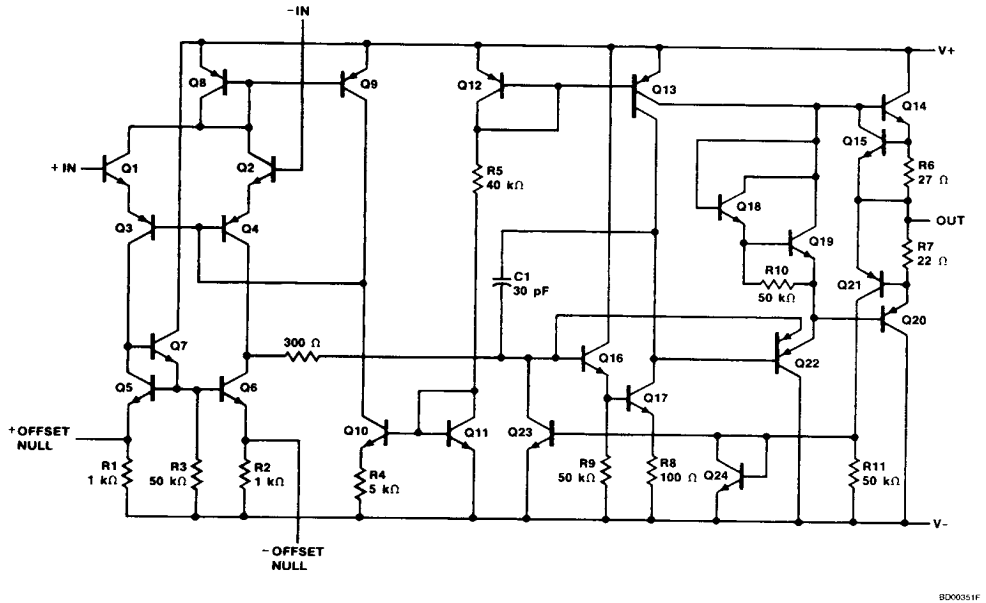

This Material Copyrighted By Its Respective Manufacturer

ENTEGRECİ

Bu belge www.entegreci.com üzerinden sunulmaktadır.

Elektronik komponent tedarikinde Entegreci

Entegreci, Eskişehir merkezli, Türkiye geneline satış yapan bir elektronik komponent mağazasıdır. Entegreler (IC), mikrodenetleyiciler, transistörler, diyotlar, pasif elemanlar, konnektörler, modüller ve geliştirme kartları tek adetten seri üretim adetlerine kadar satılır. Ürün sayfalarında güncel stok durumunu, fiyatı ve datasheet bağlantısını bulabilirsiniz.

Parça koduyla arama

Üretici parça numarasını yazın; stok ve fiyatı hemen görün.

www.entegreci.com

Ürün kategorileri

Entegreden kapasitöre tüm elektronik komponent kategorileri.

Kategorilere göz atın

Üreticiler

Aradığınız üreticinin ürünlerini tek sayfada inceleyin.

Üreticileri görün

Toplu alım ve teklif

Listede olmayan ya da yüksek adetli parçalar için teklif isteyin.

Teklif isteyin

www.entegreci.com | **destek@entegreci.com** | **0850 305 90 34**

Entegreci is an online electronic components store based in Türkiye. Search by manufacturer part number to see stock, prices and datasheets for integrated circuits, microcontrollers, transistors, passive components and connectors, or request a quote for parts that are not listed.

Bu sayfa Entegreci tarafından eklenmiştir. Belgenin önceki sayfaları asıl yayıncısına aittir ve içeriği değiştirilmemiştir; en güncel sürüm için belgenin yayıncısına başvurun.