National Semiconductor

CD4002BM/CD4002BC Dual 4-Input NOR Gate
CD4012BM/CD4012BC Dual 4-Input NAND Gate

General Description

These dual gates are monolithic complementary MOS (CMOS) integrated circuits constructed with N- and P-channel enhancement mode transistors. They have equal source and sink current capabilities and conform to standard B series output drive. The devices also have buffered outputs which improve transfer characteristics by providing very high gain. All inputs are protected against static discharge with doides to V_{DD} and V_{SS}.

Features

- Wide supply voltage range — 3.0V to 15V
- High noise immunity — 0.45 V_{DD} (typ.)
- Low power TTL compatibility — fanout of 2 driving 74L or 1 driving 74LS
- 5V–10V–15V parametric ratings
- Symmetrical output characteristics
- Maximum input leakage: μA at 15V over full temperature range

Connection Diagrams

Dual-In-Line Packages

CD4002BM/CD4002BC

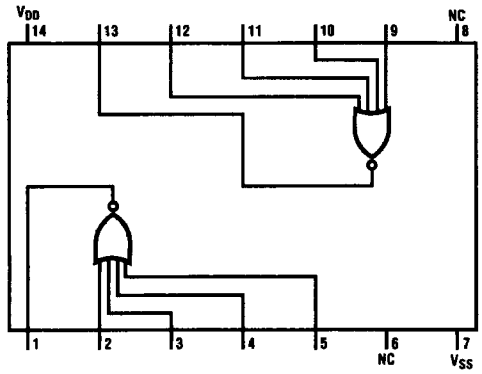

TL/F/5941–1

Top View

CD4012BM/CD4012BC

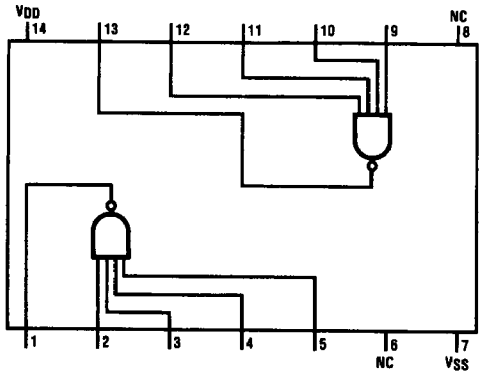

TL/F/5941–2

Top View

Order Number CD4002B* or CD4012B*

*Please look into Section 8, Appendix D for availability of package types.

Absolute Maximum Ratings (Notes 1 & 2)

If Military/Aerospace specified devices are required, contact the National Semiconductor Sales Office/ Distributors for availability and specifications.

Supply Voltage (V_{DD})	−0.5V to +18V
Input Voltage (V_{IN})	−0.5V to V_{DD} + 0.5V
Storage Temperature Range (T_S)	−65°C to +150°C
Power Dissipation (P_D)	
Dual-In-Line	700 mW
Small Outline	500 mW
Lead Temperature (T_L) (soldering, 10 seconds)	260°C

Recommended Operating Conditions (Note 2)

Supply Voltage (V_{DD})	3.0V to 15V
Input Voltage (V_{IN})	0V to V_{DD} V
Operating Temperature Range (T_A)	
CD4002BM, CD4012BM	−55°C to +125°C
CD4002BC, CD4012BC	−40°C to +85°C

DC Electrical Characteristics CD4002BM, CD4012BM (Note 2)

Symbol	Parameter	Conditions	−55°C		+25°C			+125°C		Units
			Min	Max	Min	Typ	Max	Min	Max	
I_{DD}	Quiescent Device Current	V_{DD} = 5V, V_{IN} = V_{DD} or V_{SS}		0.25		0.004	0.25		7.5	μA
		V_{DD} = 10V, V_{IN} = V_{DD} or V_{SS}		0.5		0.005	0.5		15	μA
		V_{DD} = 15V, V_{IN} = V_{DD} or V_{SS}		1.0		0.006	1.0		30	μA
V_{OL}	Low Level Output Voltage	V_{DD} = 5V		0.05		0	0.05		0.05	V
		V_{DD} = 10V		0.05		0	0.05		0.05	V
		V_{DD} = 15V		0.05		0	0.05		0.05	V
V_{OH}	High Level Output Voltage	V_{DD} = 5V	4.95		4.95	5		4.95		V
		V_{DD} = 10V	9.95		9.95	10		9.95		V
		V_{DD} = 15V	14.95		14.95	15		14.95		V
V_{IL}	Low Level Input Voltage	V_{DD} = 5V, V_O = 0.5V or 4.5V		1.5		2.25	1.5		1.5	V
		V_{DD} = 10V, V_O = 1.0V or 9.0V		3.0		4.50	3.0		3.0	V
		V_{DD} = 15V, V_O = 1.5V or 13.5V		4.0		6.75	4.0		4.0	V
V_{IH}	High Level Input Voltage	V_{DD} = 5V, V_O = 0.5V or 4.5V	3.5		3.5	2.75		3.5		V
		V_{DD} = 10V, V_O = 1.0V or 9.0V	7.0		7.0	5.50		7.0		V
		V_{DD} = 15V, V_O = 1.5V or 13.5V	11.0		11.0	8.25		11.0		V
I_{OL}	Low Level Output Current (Note 3)	V_{DD} = 5V, V_O = 0.4V	0.64		0.51	0.88		0.36		mA
		V_{DD} = 10V, V_O = 0.5V	1.6		1.3	2.20		0.90		mA
		V_{DD} = 15V, V_O = 1.5V	4.2		3.4	8.0		2.4		mA
I_{OH}	High Level Output Current (Note 3)	V_{DD} = 5V, V_O = 4.6V	−0.64		−0.51	−0.88		−0.36		mA
		V_{DD} = 10V, V_O = 9.5V	−1.6		−1.3	−2.20		−0.90		mA
		V_{DD} = 15V, V_O = 13.5V	−4.2		−3.4	−8.0		−2.4		mA
I_{IN}	Input Current	V_{DD} = 15V, V_{IN} = 0V		−0.10		-10^{-5}	−0.10		−1.0	μA
		V_{DD} = 15V, V_{IN} = 15V		0.10		10^{-5}	0.10		1.0	μA

Note 1: "Absolute Maximum Ratings" are those values beyond which the safety of the device cannot be guaranteed. They are not meant to imply that the devices should be operated at these limits. The tables of "Recommended Operating Conditions" and "Electrical Characteristics" provide conditions for actual device operation.

Note 2: V_{SS} = 0V unless otherwise specified.

Note 3: I_{OL} and I_{OH} are tested one output at a time.

DC Electrical Characteristics CD4002BC, CD4012BC (Note 2)

Symbol	Parameter	Conditions	−40°C		+25°C			+85°C		Units
			Min	Max	Min	Typ	Max	Min	Max	
I_{DD}	Quiescent Device Current	V_{DD} = 5V, V_{IN} = V_{DD} or V_{SS}		1.0		0.004	1.0		7.5	μA
		V_{DD} = 10V, V_{IN} = V_{DD} or V_{SS}		2.0		0.005	2.0		15	μA
		V_{DD} = 15V, V_{IN} = V_{DD} or V_{SS}		4.0		0.006	4.0		30	μA
V_{OL}	Low Level Output Voltage	V_{DD} = 5V		0.05		0	0.05		0.05	V
		V_{DD} = 10V		0.05		0	0.05		0.05	V
		V_{DD} = 15V		0.05		0	0.05		0.05	V
V_{OH}	High Level Output Voltage	V_{DD} = 5V	4.95		4.95	5		4.95		V
		V_{DD} = 10V	9.95		9.95	10		9.95		V
		V_{DD} = 15V	14.95		14.95	15		14.95		V
V_{IL}	Low Level Input Voltage	V_{DD} = 5V, V_O = 0.5V or 4.5V		1.5		2.25	1.5		1.5	V
		V_{DD} = 10V, V_O = 1.0V or 9.0V		3.0		4.50	3.0		3.0	V
		V_{DD} = 15V, V_O = 1.5V or 13.5V		4.0		6.75	4.0		4.0	V
V_{IH}	High Level Input Voltage	V_{DD} = 5V, V_O = 0.5V or 4.5V	3.5		3.5	2.75		3.5		V
		V_{DD} = 10V, V_O = 1.0V or 9.0V	7.0		7.0	5.50		7.0		V
		V_{DD} = 15V, V_O = 1.5V or 13.5V	11.0		11.0	8.25		11.0		V
I_{OL}	Low Level Output Current (Note 3)	V_{DD} = 5V, V_O = 0.4V	0.52		0.44	0.88		0.36		mA
		V_{DD} = 10V, V_O = 0.5V	1.3		1.1	2.2		0.90		mA
		V_{DD} = 15V, V_O = 1.5V	3.6		3.0	8.0		2.4		mA
I_{OH}	High Level Output Current (Note 3)	V_{DD} = 5V, V_O = 4.6V	−0.52		−0.44	−0.88		−0.36		mA
		V_{DD} = 10V, V_O = 9.5V	−1.3		−1.1	−2.2		−0.90		mA
		V_{DD} = 15V, V_O = 13.5V	−3.6		−3.0	−8.0		−2.4		mA
I_{IN}	Input Current	V_{DD} = 15V, V_{IN} = 0V		−0.3		-10^{-5}	−0.3		−1.0	μA
		V_{DD} = 15V, V_{IN} = 15V		0.3		10^{-5}	0.3		1.0	μA

AC Electrical Characteristics* T_A = 25°C, C_L = 50 pF, unless otherwise noted

Symbol	Parameter	Conditions	Min	Typ	Max	Units
t_{PHL}	Propagation Delay High to Low Level	V_{DD} = 5V		125	250	ns
		V_{DD} = 10V		60	100	ns
		V_{DD} = 15V		45	70	ns
t_{PLH}	Propagation Delay Low to High Level	V_{DD} = 5V		125	250	ns
		V_{DD} = 10V		60	100	ns
		V_{DD} = 15V		45	70	ns
t_{THL}, t_{TLH}	Transition Time	V_{DD} = 5V		100	200	ns
		V_{DD} = 10V		50	100	ns
		V_{DD} = 15V		40	80	ns
C_{IN}	Average Input Capacitance	Any Input		5.0	7.5	pF
C_{PD}	Power Dissipation Capacitance (Note 4)	Any Gate		20		pF

*AC Parameters are guaranteed by DC correlated testing.

Note 1: "Absolute Maximum Ratings" are those values beyond which the safety of the device cannot be guaranteed. They are not meant to imply that the devices should be operated at these limits. The tables of "Recommended Operating Conditions" and "Electrical Characteristics" provide conditions for actual device operation.

Note 2: V_{SS} = 0V unless otherwise specified.

Note 3: I_{OL} and I_{OH} are tested one output at a time.

Note 4: C_{PD} determines the no load AC power consumption of any CMOS device. For complete explanation see 54C/74C Family Characteristics, Application Note AN-90.

ENTEGRECİ

Bu belge www.entegreci.com üzerinden sunulmaktadır.

Elektronik komponent tedarikinde Entegreci

Entegreci, Eskişehir merkezli, Türkiye geneline satış yapan bir elektronik komponent mağazasıdır. Entegreler (IC), mikrodenetleyiciler, transistörler, diyotlar, pasif elemanlar, konnektörler, modüller ve geliştirme kartları tek adetten seri üretim adetlerine kadar satılır. Ürün sayfalarında güncel stok durumunu, fiyatı ve datasheet bağlantısını bulabilirsiniz.

Parça koduyla arama

Üretici parça numarasını yazın; stok ve fiyatı hemen görün.

www.entegreci.com

Ürün kategorileri

Entegreden kapasitöre tüm elektronik komponent kategorileri.

Kategorilere göz atın

Üreticiler

Aradığınız üreticinin ürünlerini tek sayfada inceleyin.

Üreticileri görün

Toplu alım ve teklif

Listede olmayan ya da yüksek adetli parçalar için teklif isteyin.

Teklif isteyin

www.entegreci.com | **destek@entegreci.com** | **0850 305 90 34**

Entegreci is an online electronic components store based in Türkiye. Search by manufacturer part number to see stock, prices and datasheets for integrated circuits, microcontrollers, transistors, passive components and connectors, or request a quote for parts that are not listed.

Bu sayfa Entegreci tarafından eklenmiştir. Belgenin önceki sayfaları asıl yayıncısına aittir ve içeriği değiştirilmemiştir; en güncel sürüm için belgenin yayıncısına başvurun.