TL082
TL082A TL082B

General purpose JFET dual operational amplifiers

Features

- Wide common-mode (up to V_{CC}^+) and differential voltage range
- Low input bias and offset current
- Output short-circuit protection
- High input impedance JFET input stage
- Internal frequency compensation
- Latch up free operation
- High slew rate: 16 V/µs (typical)

Description

The TL082, TL082A and TL082B are high speed JFET input dual operational amplifiers incorporating well matched, high voltage JFET and bipolar transistors in a monolithic integrated circuit.

The devices feature high slew rates, low input bias and offset current, and low offset voltage temperature coefficient.

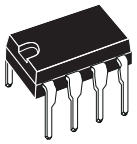

N
DIP8
(Plastic package)



D
SO-8
(Plastic micropackage)

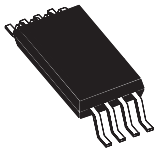

P
TSSOP8
(Thin shrink small outline package)

Pin connections (top view)

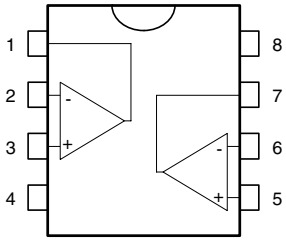

1 - Output 1
2 - Inverting input 1
3 - Non-inverting input 1
4 - V_{CC}^-
5 - Non-inverting input 2
6 - Inverting input 2
7 - Output 2
8 - V_{CC}^+

1 Schematic diagram

Figure 1. Schematic diagram

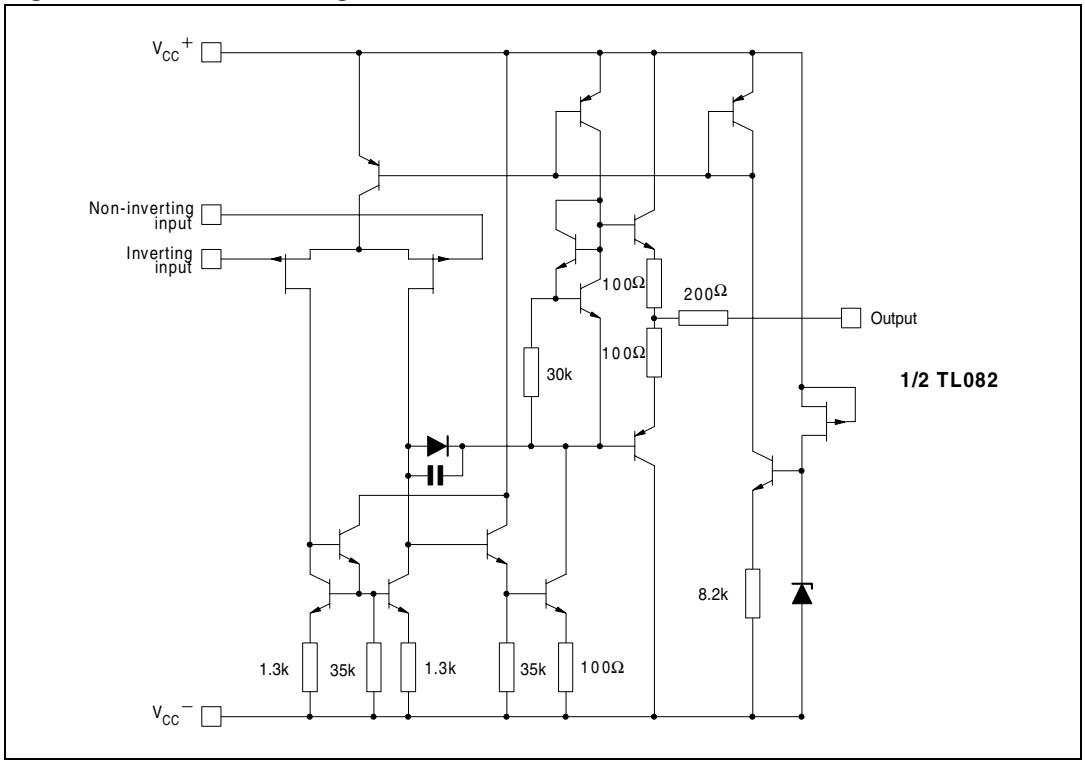

2 Absolute maximum ratings and operating conditions

Table 1. Absolute maximum ratings

Symbol	Parameter	TL082I, AI, BI	TL082C, AC, BC	Unit
V_{CC}	Supply voltage (1)	±18		V
V_{in}	Input voltage (2)	±15		V
V_{id}	Differential input voltage (3)	±30		V
P_{tot}	Power dissipation	680		mW
R_{thja}	Thermal resistance junction to ambient(4) SO-8 DIP8 TSSOP8	 125 85 120		°C/W
R_{thjc}	Thermal resistance junction to case SO-8 DIP8 TSSOP8	 40 41 37		°C/W
	Output short-circuit duration (5)	Infinite		
T_{stg}	Storage temperature range	-65 to +150		°C
ESD	HBM: human body model(6)	1		kV
	MM: machine model(7)	200		V
	CDM: charged device model(8)	1500		V

1. All voltage values, except differential voltage, are with respect to the zero reference level (ground) of the supply voltages where the zero reference level is the midpoint between V_{CC}^{+} and V_{CC}^{-}.
2. The magnitude of the input voltage must never exceed the magnitude of the supply voltage or 15 volts, whichever is less.
3. Differential voltages are the non-inverting input terminal with respect to the inverting input terminal.
4. Short-circuits can cause excessive heating. Destructive dissipation can result from simultaneous short-circuit on all amplifiers.
5. The output may be shorted to ground or to either supply. Temperature and/or supply voltages must be limited to ensure that the dissipation rating is not exceeded
6. Human body model: 100 pF discharged through a 1.5 kΩ resistor between two pins of the device, done for all couples of pin combinations with other pins floating.
7. Machine model: a 200 pF cap is charged to the specified voltage, then discharged directly between two pins of the device with no external series resistor (internal resistor < 5 Ω), done for all couples of pin combinations with other pins floating.
8. Charged device model: all pins plus package are charged together to the specified voltage and then discharged directly to the ground.

Table 2. Operating conditions

Symbol	Parameter	TL082I, AI, BI	TL082C, AC, BC	Unit
V_{CC}	Supply voltage	6 to 36		V
T_{oper}	Operating free-air temperature range	-40 to +105	0 to +70	°C

3 Electrical characteristics

Table 3. V_{CC} = ±15V, T_{amb} = +25°C (unless otherwise specified)

Symbol	Parameter	TL082I,AC,AI,BC, BI			TL082C			Unit
		Min.	Typ.	Max.	Min.	Typ.	Max.	
V_{io}	Input offset voltage (R_s = 50Ω) T_{amb} = +25°C TL082 TL082A TL082B $T_{min} \le T_{amb} \le T_{max}$ TL082 TL082A TL082B		 3 3 1	 10 6 3 13 7 5		 3	 10 13	 mV
DV_{io}	Input offset voltage drift		10			10		µV/°C
I_{io}	Input offset current (1) T_{amb} = +25°C $T_{min} \le T_{amb} \le T_{max}$		5	 100 4		5	 100 10	 pA nA
I_{ib}	Input bias current T_{amb} = +25°C $T_{min} \le T_{amb} \le T_{max}$		20	 200 20		20	 400 20	 pA nA
A_{vd}	Large signal voltage gain (R_L = 2kΩ, V_o = ±10V) T_{amb} = +25°C $T_{min} \le T_{amb} \le T_{max}$	 50 25	 200		 25 15	 200		V/mV
SVR	Supply voltage rejection ratio (R_S = 50Ω) T_{amb} = +25°C $T_{min} \le T_{amb} \le T_{max}$	 80 80	 86		 70 70	 86		dB
I_{CC}	Supply current, no load T_{amb} = +25°C $T_{min} \le T_{amb} \le T_{max}$		1.4	 2.5 2.5		1.4	 2.5 2.5	mA
V_{icm}	Input common mode voltage range	±11	 +15 -12		±11	 +15 -12		V
CMR	Common mode rejection ratio (R_S = 50Ω) T_{amb} = +25°C $T_{min} \le T_{amb} \le T_{max}$	 80 80	 86		 70 70	 86		dB
I_{os}	Output short-circuit current T_{amb} = +25°C $T_{min} \le T_{amb} \le T_{max}$	 10 10	 40	 60 60	 10 10	 40	 60 60	 mA
$\pm V_{opp}$	Output voltage swing T_{amb} = +25°C R_L = 2kΩ R_L = 10kΩ $T_{min} \le T_{amb} \le T_{max}$ R_L = 2kΩ R_L = 10kΩ	 10 12 10 12	 12 13.5		 10 12 10 12	 12 13.5		 V
SR	Slew rate V_{in} = 10V, R_L = 2kΩ, C_L = 100pF, unity gain	8	16		8	16		V/µs

Table 3. V_{CC} = ±15V, T_{amb} = +25°C (unless otherwise specified) (continued)

Symbol	Parameter	TL082I,AC,AI,BC, BI			TL082C			Unit
		Min.	Typ.	Max.	Min.	Typ.	Max.	
t_r	Rise time V_{in} = 20mV, R_L = 2kΩ, C_L = 100pF, unity gain		0.1			0.1		µs
K_{ov}	Overshoot V_{in} = 20mV, R_L = 2kΩ, C_L = 100pF, unity gain		10			10		%
GBP	Gain bandwidth product V_{in} = 10mV, R_L = 2kΩ, C_L = 100pF, F= 100kHz	2.5	4		2.5	4		MHz
R_i	Input resistance		10^{12}			10^{12}		Ω
THD	Total harmonic distortion F=1kHz, R_L = 2kΩ,C_L=100pF, A_v=20dB, V_o=2V_{pp}		0.01			0.01		%
e_n	Equivalent input noise voltage R_S = 100Ω, F = 1kHz		15			15		$\frac{nV}{\sqrt{Hz}}$
∅m	Phase margin		45			45		degrees
V_{o1}/V_{o2}	Channel separation A_v = 100		120			120		dB

1. The input bias currents are junction leakage currents which approximately double for every 10° C increase in the junction temperature.

Figure 2. Maximum peak-to-peak output voltage versus frequency

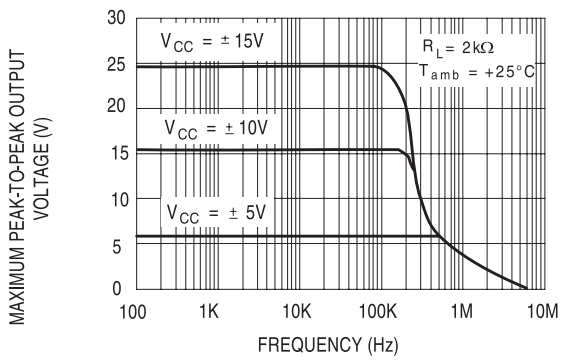

Figure 3. Maximum peak-to-peak output voltage versus frequency

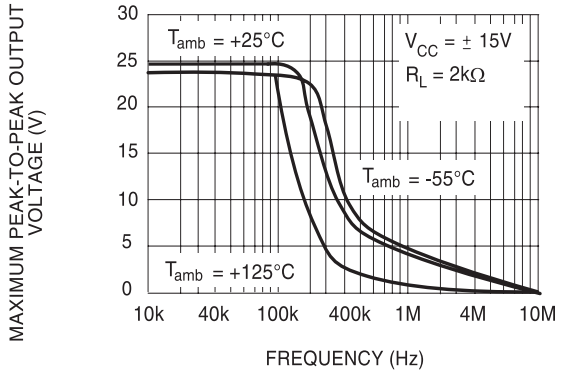

Figure 4. Maximum peak-to-peak output voltage versus load resistance

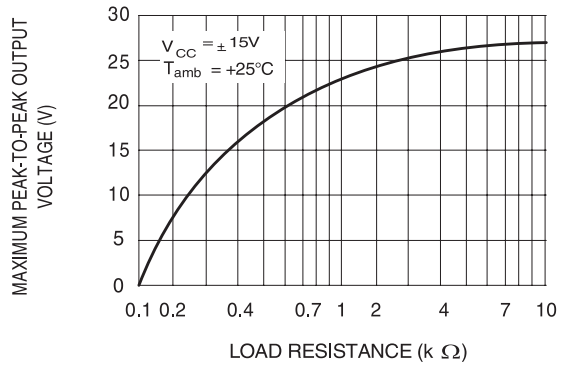

Figure 5. Maximum peak-to-peak output voltage versus frequency

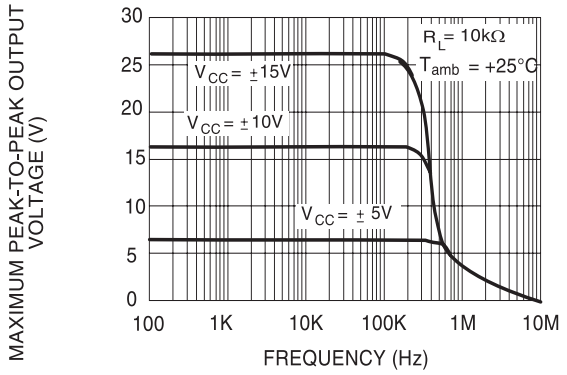

Figure 6. Maximum peak-to-peak output voltage versus free air temperature

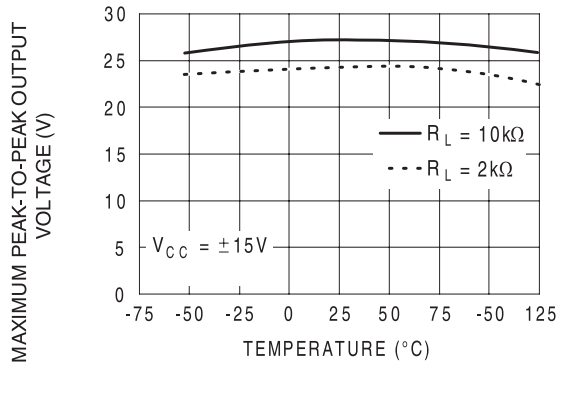

Figure 7. Maximum peak-to-peak output voltage versus supply voltage

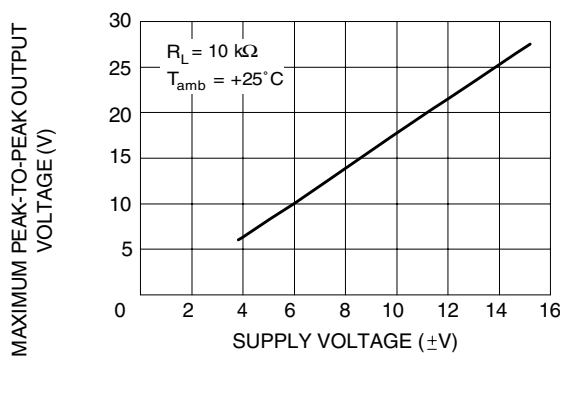

Figure 8. Input bias current versus free air temperature

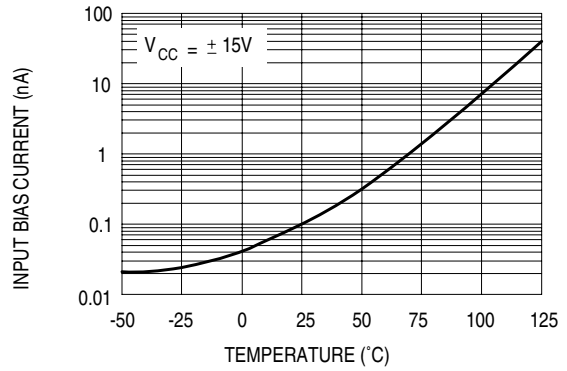

Figure 9. Large signal differential voltage amplification and phase shift versus frequency

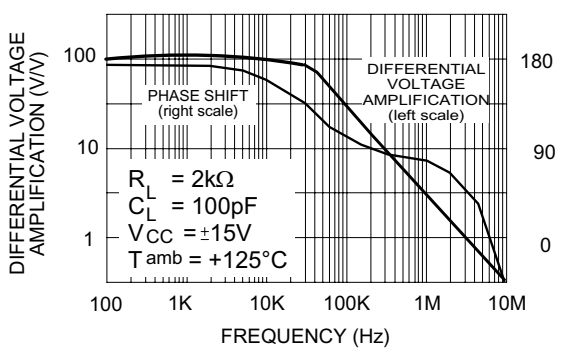

Figure 10. Supply current per amplifier versus free air temperature

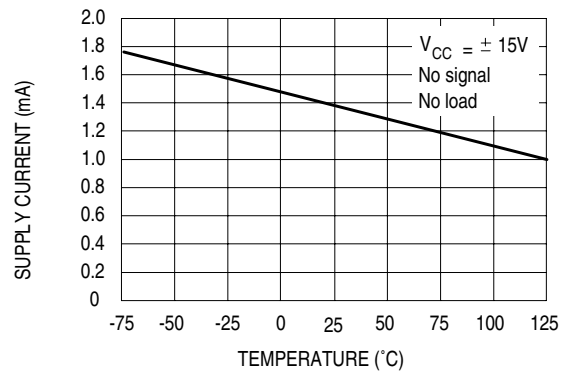

Figure 11. Large signal differential voltage amplification versus free air temp.

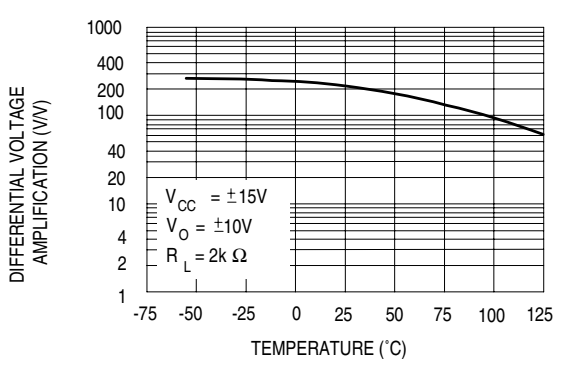

Figure 12. Total power dissipation versus free air temperature

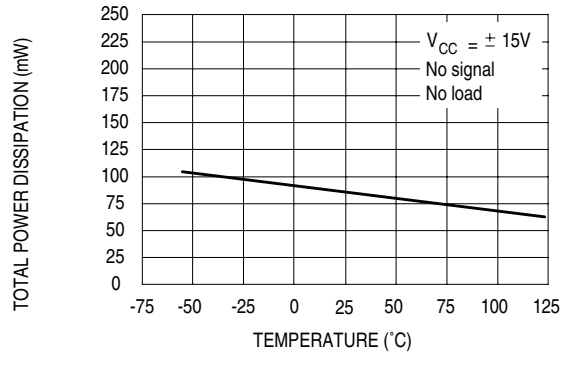

Figure 13. Supply current per amplifier versus supply voltage

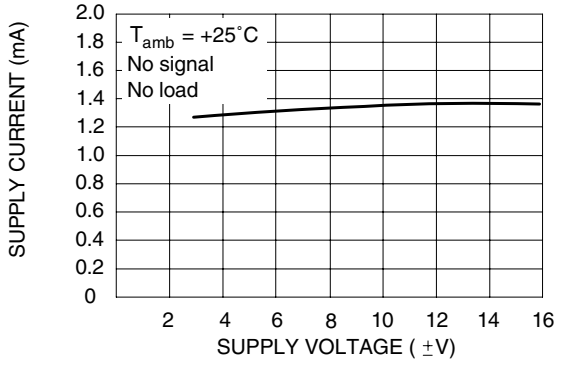

Figure 14. Common mode rejection ratio versus free air temperature

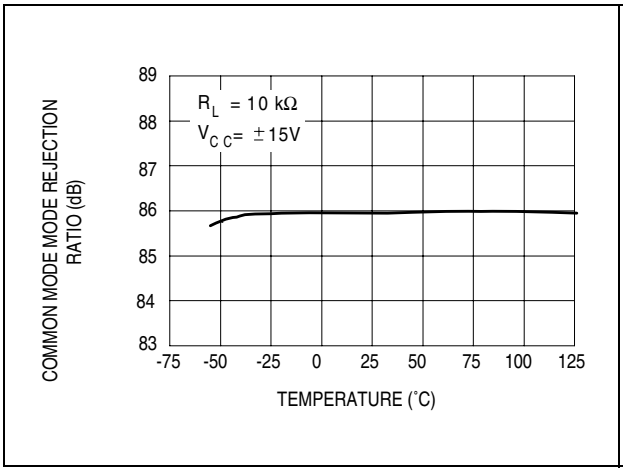

Figure 15. Output voltage versus elapsed time

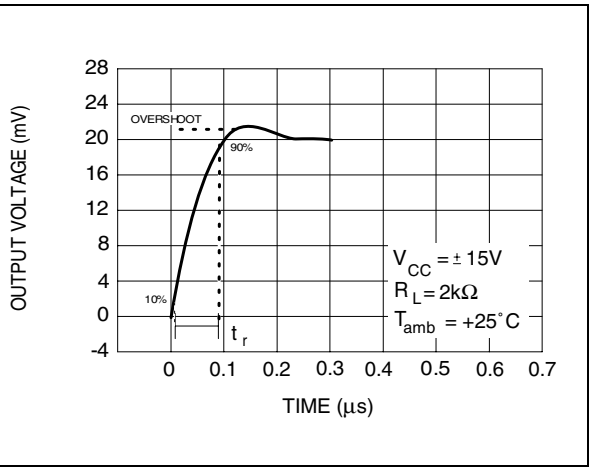

Figure 16. Voltage follower large signal pulse response

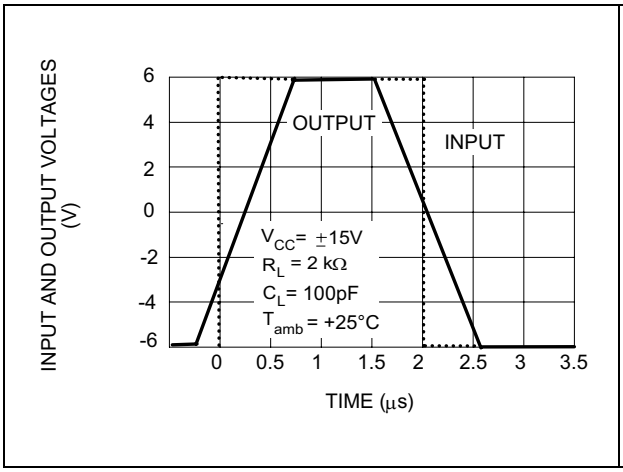

Figure 17. Equivalent input noise voltage versus frequency

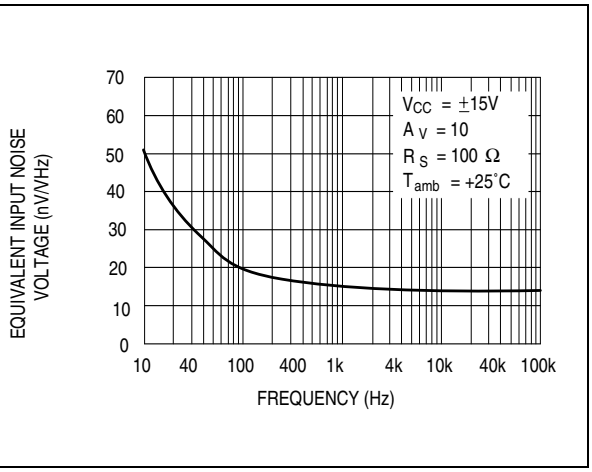

Figure 18. Total harmonic distortion versus frequency

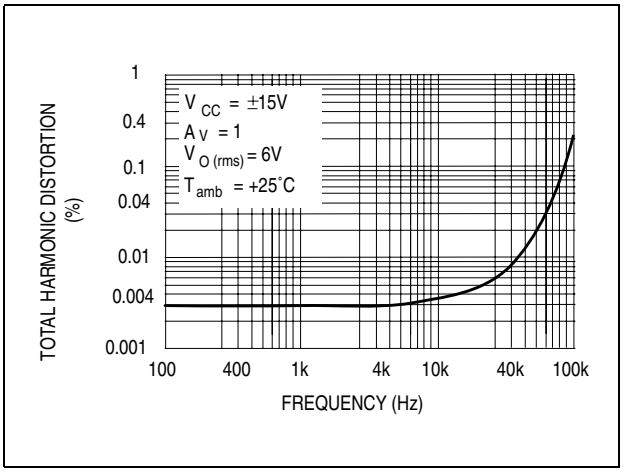

4 Parameter measurement information

Figure 19. Voltage follower

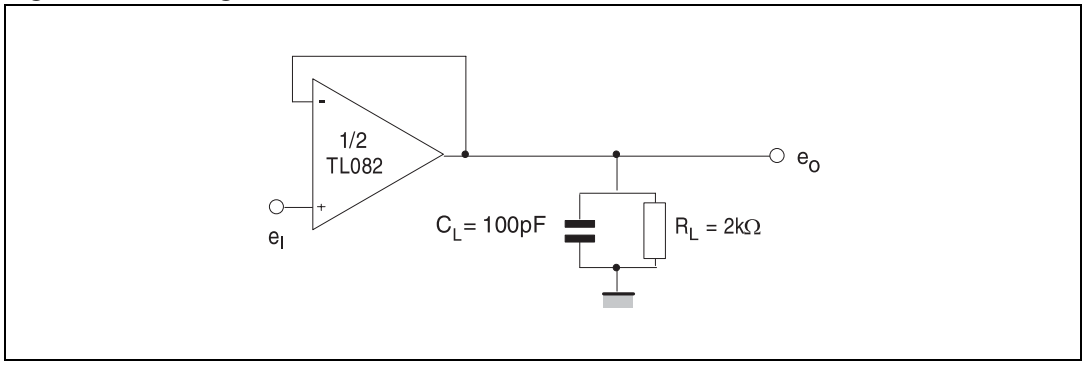

Figure 20. Gain-of-10 inverting amplifier

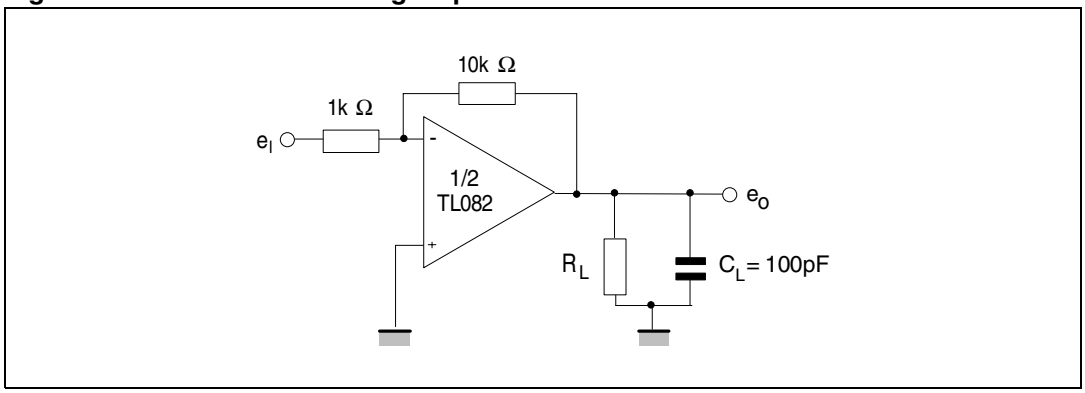

5 Typical applications

Figure 21. 100 kHz quadruple oscillator

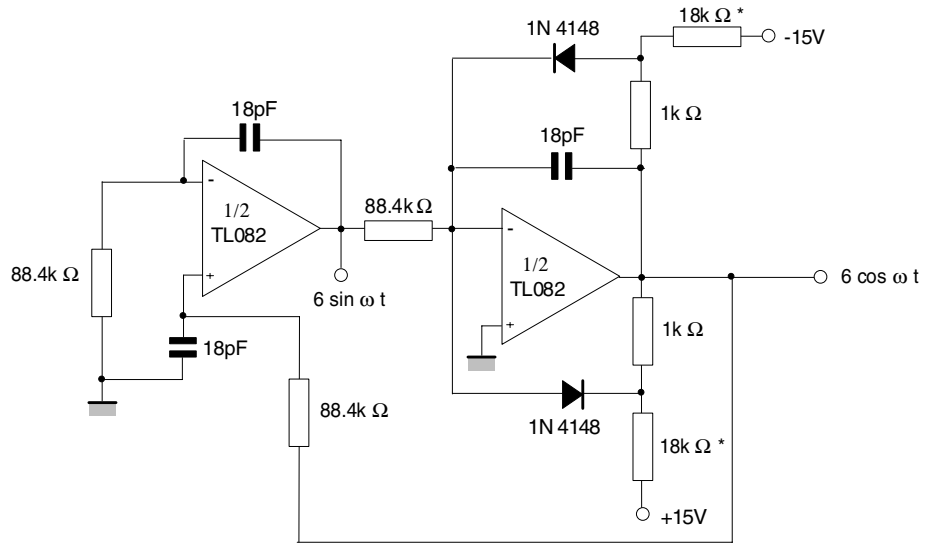

* These resistor values may be adjusted for a symmetrical output

6 Package information

In order to meet environmental requirements, STMicroelectronics offers these devices in ECOPACK® packages. These packages have a lead-free second level interconnect. The category of second level interconnect is marked on the package and on the inner box label, in compliance with JEDEC Standard JESD97. The maximum ratings related to soldering conditions are also marked on the inner box label. ECOPACK is an STMicroelectronics trademark. ECOPACK specifications are available at: www.st.com.

6.1 DIP8 package information

Figure 22. DIP8 package mechanical drawing

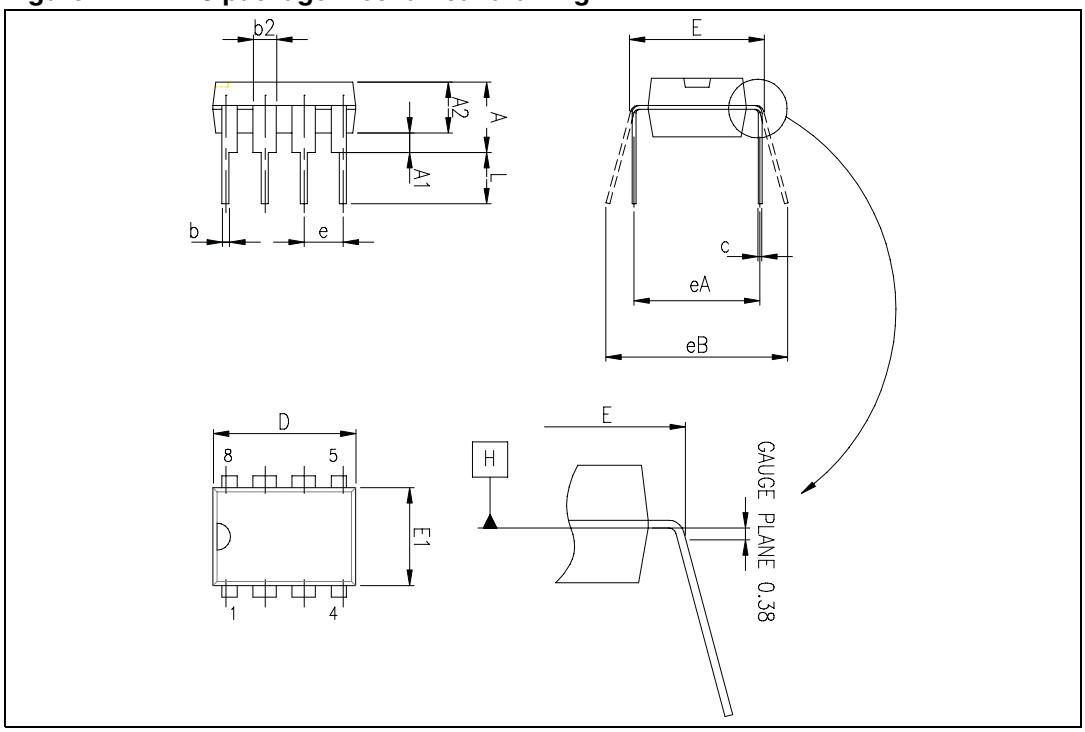

Table 4. DIP8 package mechanical data

Ref.	Dimensions					
	Millimeters			Inches		
	Min.	Typ.	Max.	Min.	Typ.	Max.
A			5.33			0.210
A1	0.38			0.015		
A2	2.92	3.30	4.95	0.115	0.130	0.195
b	0.36	0.46	0.56	0.014	0.018	0.022
b2	1.14	1.52	1.78	0.045	0.060	0.070
c	0.20	0.25	0.36	0.008	0.010	0.014
D	9.02	9.27	10.16	0.355	0.365	0.400
E	7.62	7.87	8.26	0.300	0.310	0.325
E1	6.10	6.35	7.11	0.240	0.250	0.280
e		2.54			0.100	
eA		7.62			0.300	
eB			10.92			0.430
L	2.92	3.30	3.81	0.115	0.130	0.150

6.2 SO-8 package information

Figure 23. SO-8 package mechanical drawing

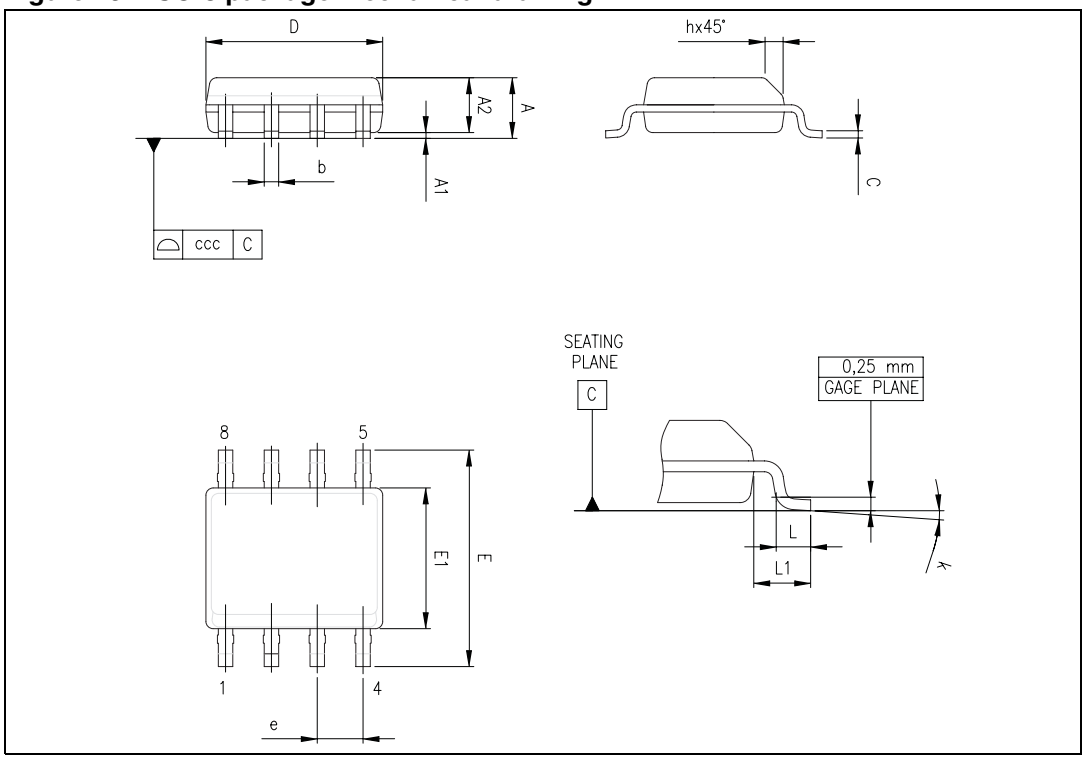

Table 5. SO-8 package mechanical data

Ref.	Dimensions					
	Millimeters			Inches		
	Min.	Typ.	Max.	Min.	Typ.	Max.
A			1.75			0.069
A1	0.10		0.25	0.004		0.010
A2	1.25			0.049		
b	0.28		0.48	0.011		0.019
c	0.17		0.23	0.007		0.010
D	4.80	4.90	5.00	0.189	0.193	0.197
E	5.80	6.00	6.20	0.228	0.236	0.244
E1	3.80	3.90	4.00	0.150	0.154	0.157
e		1.27			0.050	
h	0.25		0.50	0.010		0.020
L	0.40		1.27	0.016		0.050
k	1°		8°	1°		8°
ccc			0.10			0.004

6.3 TSSOP8 package information

Figure 24. TSSOP8 package mechanical drawing

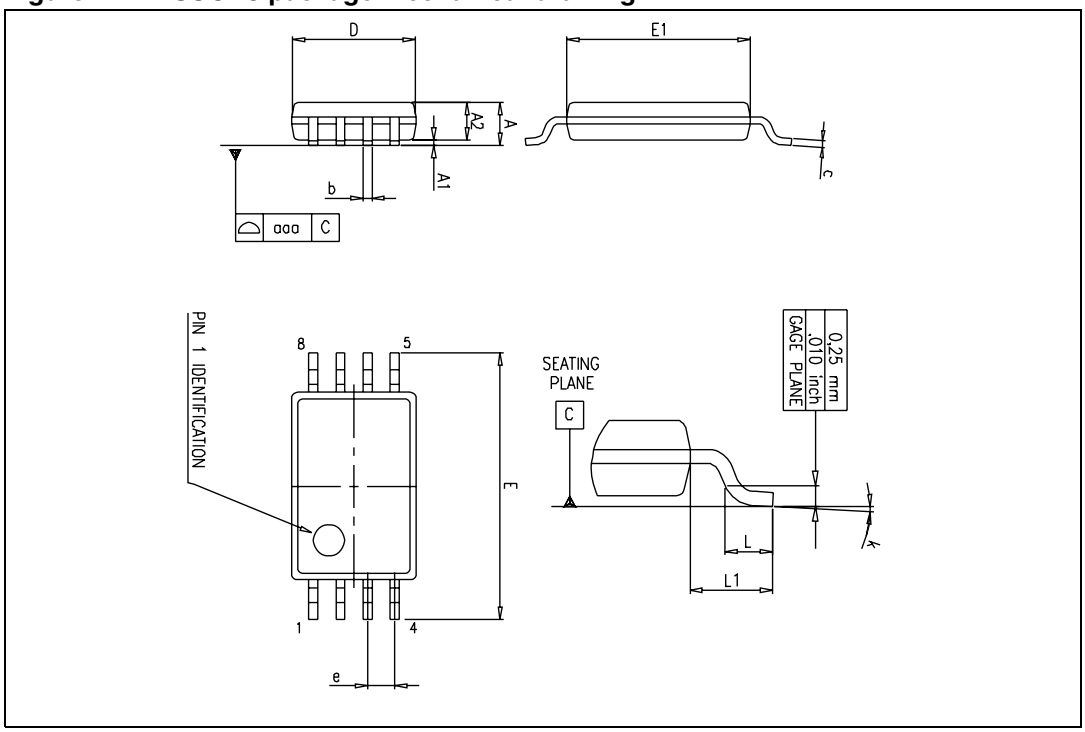

Table 6. TSSOP8 package mechanical data

Ref.	Dimensions					
	Millimeters			Inches		
	Min.	Typ.	Max.	Min.	Typ.	Max.
A			1.2			0.047
A1	0.05		0.15	0.002		0.006
A2	0.80	1.00	1.05	0.031	0.039	0.041
b	0.19		0.30	0.007		0.012
c	0.09		0.20	0.004		0.008
D	2.90	3.00	3.10	0.114	0.118	0.122
E	6.20	6.40	6.60	0.244	0.252	0.260
E1	4.30	4.40	4.50	0.169	0.173	0.177
e		0.65			0.0256	
k	0°		8°	0°		8°
L	0.45	0.60	0.75	0.018	0.024	0.030
L1		1			0.039	
aaa		0.1			0.004	

7 Ordering information

Table 7. Order codes

Order code	Temperature range	Package	Packing	Marking
TL082IN	-40°C, +105°C	DIP8	Tube	TL082IN
TL082ID TL082IDT		SO-8	Tube or tape & reel	082I
TL082IPT		TSSOP8	Tape & reel	
TL082AIN		DIP8	Tube	TL082AIN
TL082AID TL082AIDT		SO-8	Tube or tape & reel	082AI
TL082AIPT		TSSOP8	Tape & reel	
TL082BIN		DIP8	Tube	TL082BIN
TL082BID TL082BIDT		SO-8	Tube or tape & reel	082BI
TL082BIPT		TSSOP8	Tape & reel	
TL082CN	0°C, +70°C	DIP8	Tube	TL082CN
TL082CD TL082CDT		SO-8	Tube or tape & reel	082C
TL082CPT		TSSOP8	Tape & reel	
TL082ACN		DIP8	Tube	TL082ACN
TL082ACD TL082ACDT		SO-8	Tube or tape & reel	082AC
TL082ACPT		TSSOP8	Tape & reel	
TL082BCN		DIP8	Tube	TL082BCN
TL082BCD TL082BCDT		SO-8	Tube or tape & reel	082BC
TL082BCPT		TSSOP8	Tape & reel	
TL082IYDT(1)	-40°C, +105°C	SO8 (automotive grade)	Tube or tape & reel	082IY
TL082AIYDT(1)				82AIY
TL082BIYDT(1)				82BIY

1. Qualified and characterized according to AEC Q100 and Q003 or equivalent, advanced screening according to AEC Q001 & Q 002 or equivalent.

8 Revision history

Table 8. Document revision history

Date	Revision	Changes
02-Apr-2001	1	Initial release.
2002-2003	2-7	Internal revisions.
30-Apr-2004	8	Format update.
06-Mar-2007	9	Added ESD information in *Table 1 on page 3*. Expanded order codes table and added automotive grade order codes. See *Table 7 on page 15*. Added *Table 2: Operating conditions on page 3*. Updated package information to make it compliant with the latest JEDEC standards.
17-Jun-2008	10	Removed information concerning military temperature range (TL082M*, TL082AM*, TL082BM*).

Please Read Carefully:

Information in this document is provided solely in connection with ST products. STMicroelectronics NV and its subsidiaries (“ST”) reserve the right to make changes, corrections, modifications or improvements, to this document, and the products and services described herein at any time, without notice.

All ST products are sold pursuant to ST’s terms and conditions of sale.

Purchasers are solely responsible for the choice, selection and use of the ST products and services described herein, and ST assumes no liability whatsoever relating to the choice, selection or use of the ST products and services described herein.

No license, express or implied, by estoppel or otherwise, to any intellectual property rights is granted under this document. If any part of this document refers to any third party products or services it shall not be deemed a license grant by ST for the use of such third party products or services, or any intellectual property contained therein or considered as a warranty covering the use in any manner whatsoever of such third party products or services or any intellectual property contained therein.

UNLESS OTHERWISE SET FORTH IN ST’S TERMS AND CONDITIONS OF SALE ST DISCLAIMS ANY EXPRESS OR IMPLIED WARRANTY WITH RESPECT TO THE USE AND/OR SALE OF ST PRODUCTS INCLUDING WITHOUT LIMITATION IMPLIED WARRANTIES OF MERCHANTABILITY, FITNESS FOR A PARTICULAR PURPOSE (AND THEIR EQUIVALENTS UNDER THE LAWS OF ANY JURISDICTION), OR INFRINGEMENT OF ANY PATENT, COPYRIGHT OR OTHER INTELLECTUAL PROPERTY RIGHT.

UNLESS EXPRESSLY APPROVED IN WRITING BY AN AUTHORIZED ST REPRESENTATIVE, ST PRODUCTS ARE NOT RECOMMENDED, AUTHORIZED OR WARRANTED FOR USE IN MILITARY, AIR CRAFT, SPACE, LIFE SAVING, OR LIFE SUSTAINING APPLICATIONS, NOR IN PRODUCTS OR SYSTEMS WHERE FAILURE OR MALFUNCTION MAY RESULT IN PERSONAL INJURY, DEATH, OR SEVERE PROPERTY OR ENVIRONMENTAL DAMAGE. ST PRODUCTS WHICH ARE NOT SPECIFIED AS "AUTOMOTIVE GRADE" MAY ONLY BE USED IN AUTOMOTIVE APPLICATIONS AT USER’S OWN RISK.

Resale of ST products with provisions different from the statements and/or technical features set forth in this document shall immediately void any warranty granted by ST for the ST product or service described herein and shall not create or extend in any manner whatsoever, any liability of ST.

ST and the ST logo are trademarks or registered trademarks of ST in various countries.

Information in this document supersedes and replaces all information previously supplied.

The ST logo is a registered trademark of STMicroelectronics. All other names are the property of their respective owners.

© 2008 STMicroelectronics - All rights reserved

STMicroelectronics group of companies

Australia - Belgium - Brazil - Canada - China - Czech Republic - Finland - France - Germany - Hong Kong - India - Israel - Italy - Japan - Malaysia - Malta - Morocco - Singapore - Spain - Sweden - Switzerland - United Kingdom - United States of America

www.st.com

ENTEGRECİ

Bu belge www.entegreci.com üzerinden sunulmaktadır.

Elektronik komponent tedarikinde Entegreci

Entegreci, Eskişehir merkezli, Türkiye geneline satış yapan bir elektronik komponent mağazasıdır. Entegreler (IC), mikrodenetleyiciler, transistörler, diyotlar, pasif elemanlar, konnektörler, modüller ve geliştirme kartları tek adetten seri üretim adetlerine kadar satılır. Ürün sayfalarında güncel stok durumunu, fiyatı ve datasheet bağlantısını bulabilirsiniz.

Parça koduyla arama

Üretici parça numarasını yazın; stok ve fiyatı hemen görün.

www.entegreci.com

Ürün kategorileri

Entegreden kapasitöre tüm elektronik komponent kategorileri.

Kategorilere göz atın

Üreticiler

Aradığınız üreticinin ürünlerini tek sayfada inceleyin.

Üreticileri görün

Toplu alım ve teklif

Listede olmayan ya da yüksek adetli parçalar için teklif isteyin.

Teklif isteyin

www.entegreci.com | **destek@entegreci.com** | **0850 305 90 34**

Entegreci is an online electronic components store based in Türkiye. Search by manufacturer part number to see stock, prices and datasheets for integrated circuits, microcontrollers, transistors, passive components and connectors, or request a quote for parts that are not listed.

Bu sayfa Entegreci tarafından eklenmiştir. Belgenin önceki sayfaları asıl yayıncısına aittir ve içeriği değiştirilmemiştir; en güncel sürüm için belgenin yayıncısına başvurun.