TL074
TL074A - TL074B

LOW NOISE J-FET QUAD OPERATIONAL AMPLIFIERS

- WIDE COMMON-MODE (UP TO V_{CC}^+) AND DIFFERENTIAL VOLTAGE RANGE
- LOW INPUT BIAS AND OFFSET CURRENT
- LOW NOISE e_n = 15nV/√Hz (typ)
- OUTPUT SHORT-CIRCUIT PROTECTION
- HIGH INPUT IMPEDANCE J–FET INPUT STAGE
- LOW HARMONIC DISTORTION : 0.01% (typ)
- INTERNAL FREQUENCY COMPENSATION
- LATCH UP FREE OPERATION
- HIGH SLEW RATE : 13V/µs (typ)

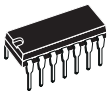

N
DIP14
(Plastic Package)

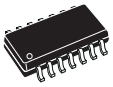

D
SO14
(Plastic Micropackage)

DESCRIPTION

The TL074, TL074A and TL074B are high speed J–FET input quad operational amplifiers incorporating well matched, high voltage J–FET and bipolar transistors in a monolithic integrated circuit.

The devices feature high slew rates, low input bias and offset currents, and low offset voltage temperature coefficient.

ORDER CODE

Part Number	Temperature Range	Package	
		N	D
TL074M/AM/BM	-55°C, +125°C	•	•
TL074I/AI/BI	-40°C, +105°C	•	•
TL074C/AC/BC	0°C, +70°C	•	•
Example : TL074IN			

N = Dual in Line Package (DIP)
D = Small Outline Package (SO) - also available in Tape & Reel (DT)

PIN CONNECTIONS (top view)

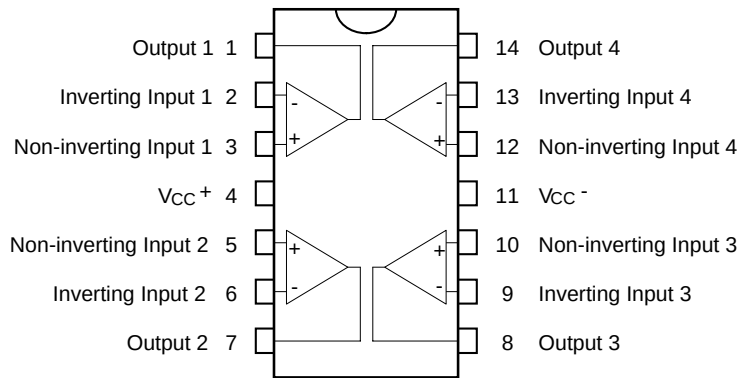

SCHEMATIC DIAGRAM

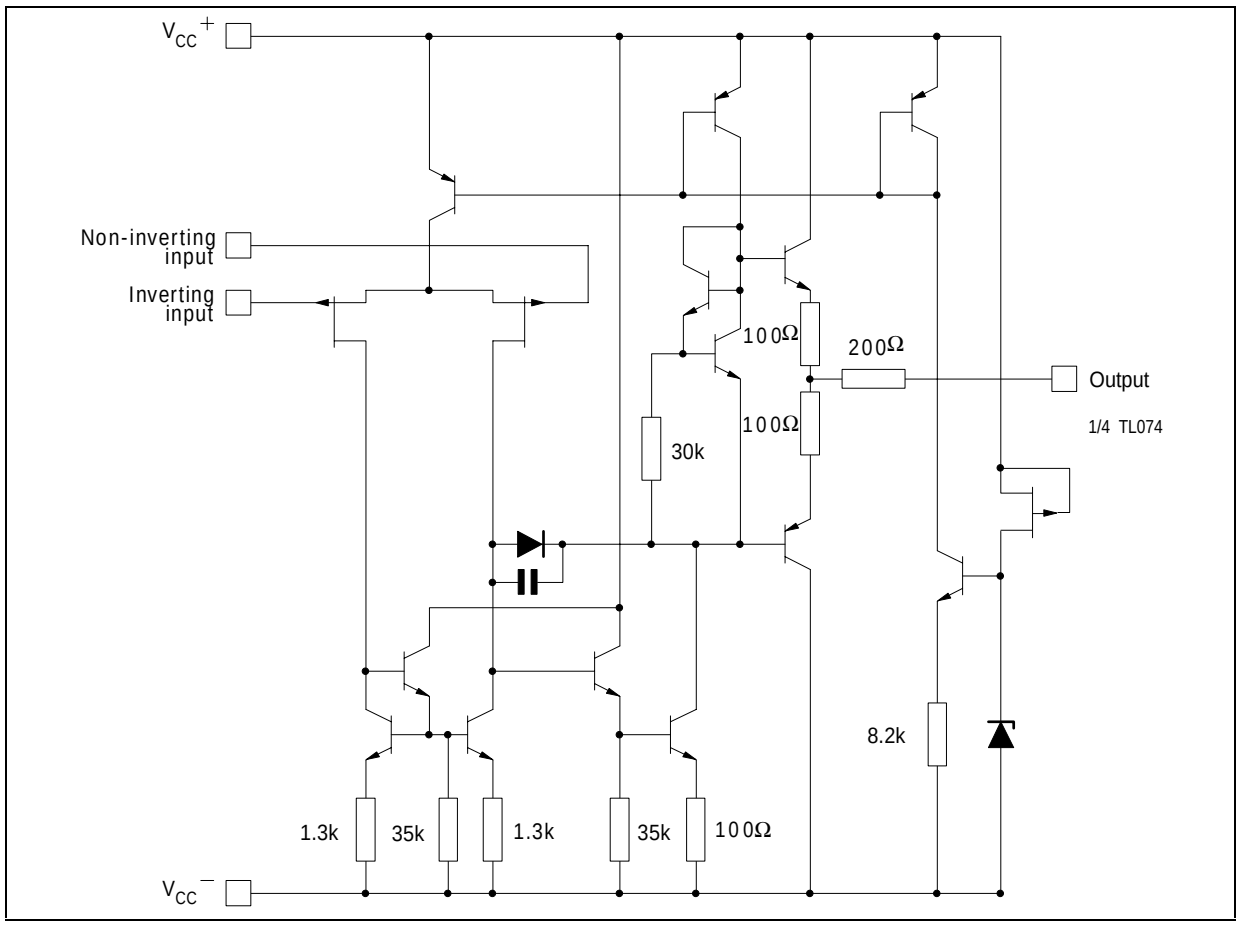

ABSOLUTE MAXIMUM RATINGS

Symbol	Parameter	TL074M, AM, BM	TL074I, AI, BI	TL074C, AC, BC	Unit
V_{CC}	Supply voltage - note 1)	±18			V
V_i	Input Voltage - note 2)	±15			V
V_{id}	Differential Input Voltage - note 3)	±30			V
P_{tot}	Power Dissipation	680			mW
	Output Short-circuit Duration - note 4)	Infinite			
T_{oper}	Operating Free-air Temperature Range	-55 to +125	-40 to +105	0 to +70	°C
T_{stg}	Storage Temperature Range	-65 to +150			°C

1. All voltage values, except differential voltage, are with respect to the zero reference level (ground) of the supply voltages where the zero reference level is the midpoint between V_{CC}^+ and V_{CC}^-.
2. The magnitude of the input voltage must never exceed the magnitude of the supply voltage or 15 volts, whichever is less.
3. Differential voltages are the non-inverting input terminal with respect to the inverting input terminal.
4. The output may be shorted to ground or to either supply. Temperature and/or supply voltages must be limited to ensure that the dissipation rating is not exceeded

ELECTRICAL CHARACTERISTICS

V_{CC} = ±15V, T_{amb} = +25°C (unless otherwise specified)

Symbol	Parameter		TL074I,M,AC,AI,AM,BC,BI,BM			TL074C			Unit
			Min.	Typ.	Max.	Min.	Typ.	Max.	
V_{io}	Input Offset Voltage (R_s = 50Ω)								mV
	T_{amb} = +25°C	TL074		3	10		3	10	
		TL074A		3	6				
		TL074B		1	3				
	$T_{min} \le T_{amb} \le T_{max}$	TL074			13			13	
		TL074A			7				
		TL074B			5				
DV_{io}	Input Offset Voltage Drift			10			10		µV/°C
I_{io}	Input Offset Current - note 1)								
	T_{amb} = +25°C			5	100		5	100	pA
	$T_{min} \le T_{amb} \le T_{max}$				4			10	nA
I_{ib}	Input Bias Current -note 1								
	T_{amb} = +25°C			20	200		30	200	pA
	$T_{min} \le T_{amb} \le T_{max}$				20			20	nA
A_{vd}	Large Signal Voltage Gain (R_L = 2kΩ, V_o = ±10V)								V/mV
	T_{amb} = +25°C		50	200		25	200		
	$T_{min} \le T_{amb} \le T_{max}$		25			15			
SVR	Supply Voltage Rejection Ratio (R_S = 50Ω)								dB
	T_{amb} = +25°C		80	86		70	86		
	$T_{min} \le T_{amb} \le T_{max}$		80			70			
I_{CC}	Supply Current, no load, per amplifier								mA
	T_{amb} = +25°C			1.4	2.5		1.4	2.5	
	$T_{min} \le T_{amb} \le T_{max}$				2.5			2.5	
V_{icm}	Input Common Mode Voltage Range		±11	+15 -12		±11	+15 -12		V
CMR	Common Mode Rejection Ratio (R_S = 50Ω)								dB
	T_{amb} = +25°C		80	86		70	86		
	$T_{min} \le T_{amb} \le T_{max}$		80			70			
I_{os}	Output Short-circuit Current								mA
	T_{amb} = +25°C		10	40	60	10	40	60	
	$T_{min} \le T_{amb} \le T_{max}$		10		60	10		60	
$\pm V_{opp}$	Output Voltage Swing								V
	T_{amb} = +25°C	RL = 2kΩ	10	12		10	12		
		RL = 10kΩ	12	13.5		12	13.5		
	$T_{min} \le T_{amb} \le T_{max}$	RL = 2kΩ	10			10			
		RL = 10kΩ	12			12			
SR	Slew Rate (T_{amb} = +25°C)								V/µs
	V_{in} = 10V, R_L = 2kΩ, C_L = 100pF, unity gain		8	13		8	13		
t_r	Rise Time (T_{amb} = +25°C)								µs
	V_{in} = 20mV, R_L = 2kΩ, C_L = 100pF, unity gain			0.1			0.1		
K_{ov}	Overshoot (T_{amb} = +25°C)								%
	V_{in} = 20mV, R_L = 2kΩ, C_L = 100pF, unity gain			10			10		
GBP	Gain Bandwidth Product (T_{amb} = +25°C)								MHz
	V_{in} = 10mV, R_L = 2kΩ, C_L = 100pF, f= 100kHz		2	3		2	3		
R_i	Input Resistance			10^{12}			10^{12}		Ω

Symbol	Parameter	TL074I,M,AC,AI,AM, BC,BI,BM			TL074C			Unit
		Min.	Typ.	Max.	Min.	Typ.	Max.	
THD	Total Harmonic Distortion (T_{amb} = +25°C) f= 1kHz, R_L = 2kΩ,C_L = 100pF, A_v = 20dB, V_o = $2V_{pp}$		0.01			0.01		%
e_n	Equivalent Input Noise Voltage R_S = 100Ω, f = 1KHz		15			15		$\frac{nV}{\sqrt{Hz}}$
∅m	Phase Margin		45			45		degrees
V_{o1}/V_{o2}	Channel separation A_v = 100		120			120		dB

1. The input bias currents are junction leakage currents which approximately double for every 10°C increase in the junction temperature.

MAXIMUM PEAK-TO-PEAK OUTPUT VOLTAGE versus FREQUENCY

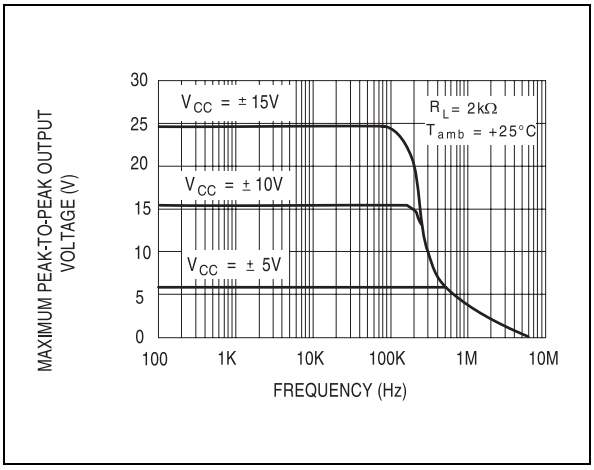

MAXIMUM PEAK-TO-PEAK OUTPUT VOLTAGE versus FREQUENCY

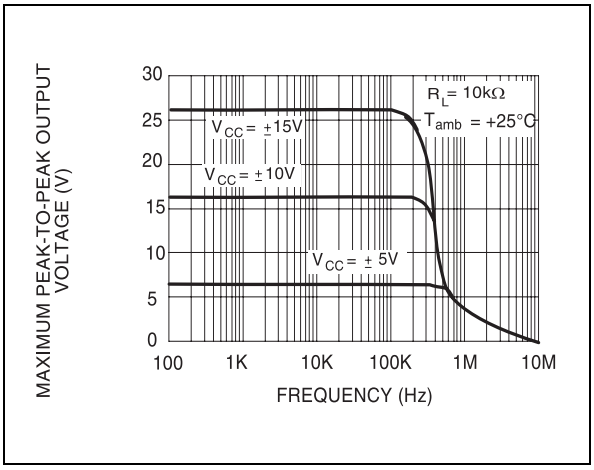

MAXIMUM PEAK-TO-PEAK OUTPUT VOLTAGE versus FREQUENCY

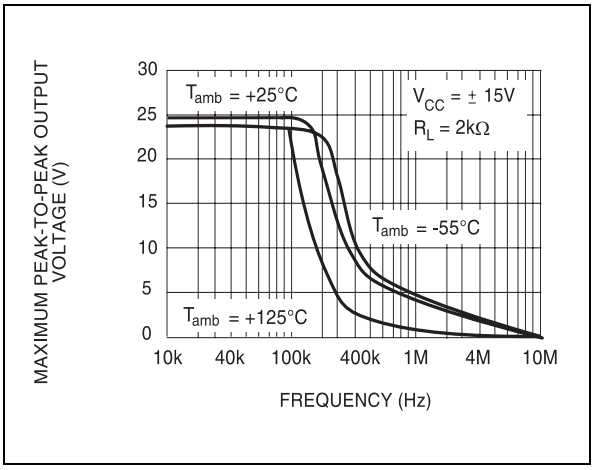

MAXIMUM PEAK-TO-PEAK OUTPUT VOLTAGE versus FREE AIR TEMP.

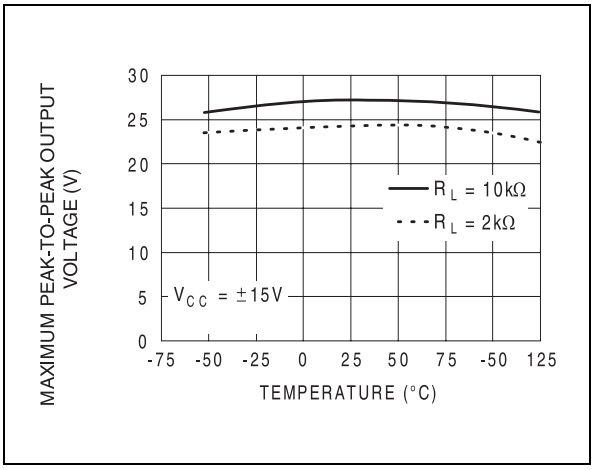

MAXIMUM PEAK-TO-PEAK OUTPUT VOLTAGE versus LOAD RESISTANCE

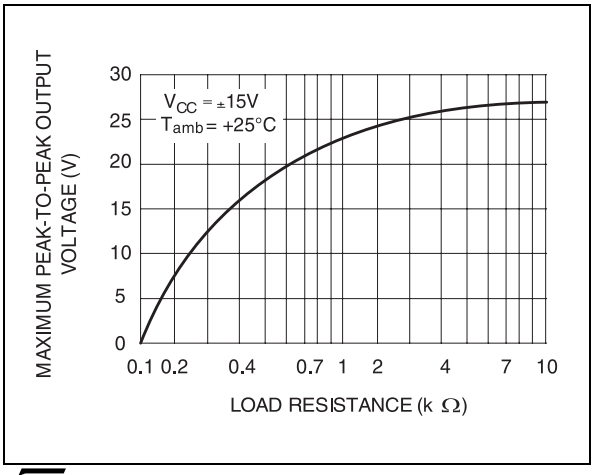

MAXIMUM PEAK-TO-PEAK OUTPUT VOLTAGE versus SUPPLY VOLTAGE

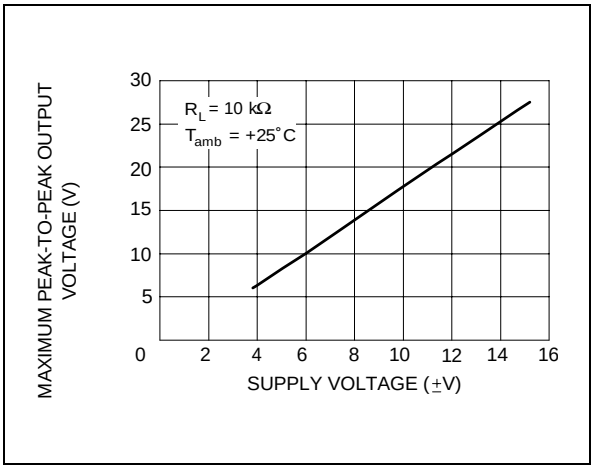

INPUT BIAS CURRENT versus FREE AIR TEMPERATURE

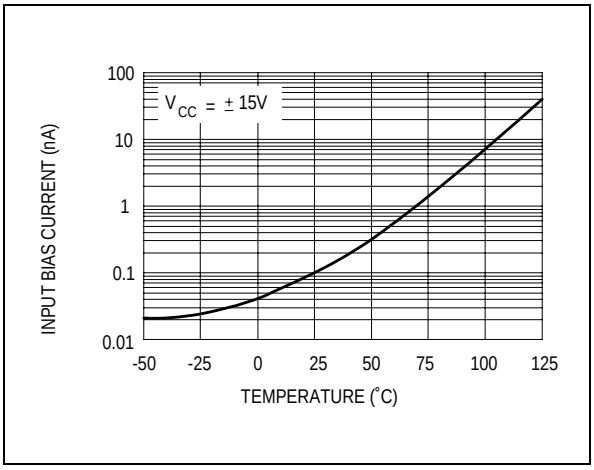

LARGE SIGNAL DIFFERENTIAL VOLTAGE AMPLIFICATION versus FREE AIR TEMP.

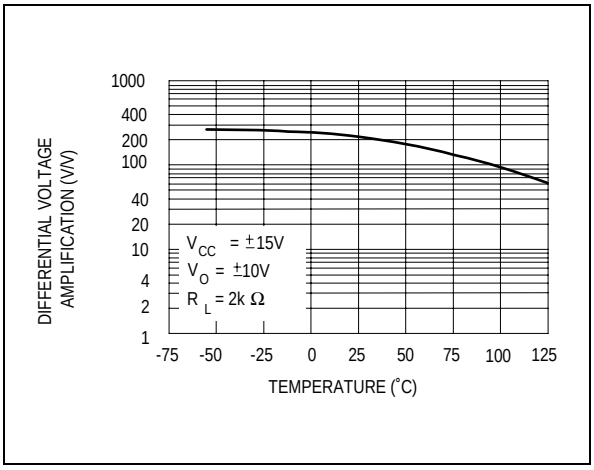

LARGE SIGNAL DIFFERENTIAL VOLTAGE AMPLIFICATION AND PHASE SHIFT versus FREQUENCY

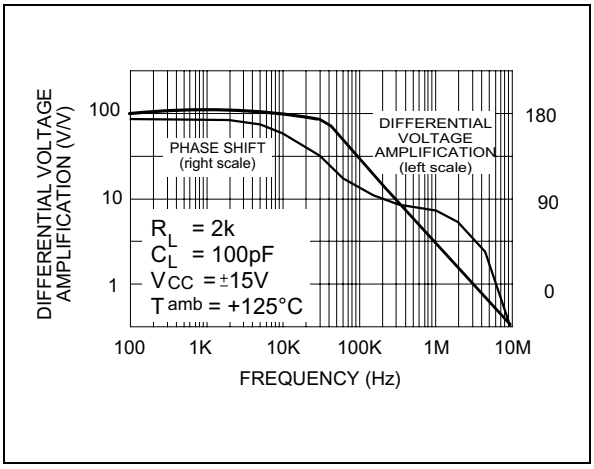

TOTAL POWER DISSIPATION versus FREE AIR TEMPERATURE

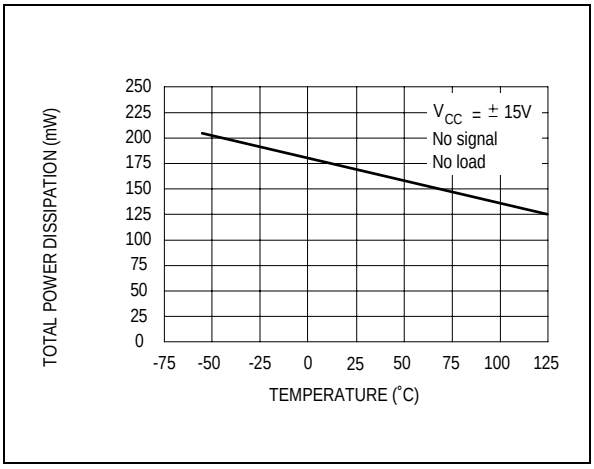

SUPPLY CURRENT PER AMPLIFIER versus FREE AIR TEMPERATURE

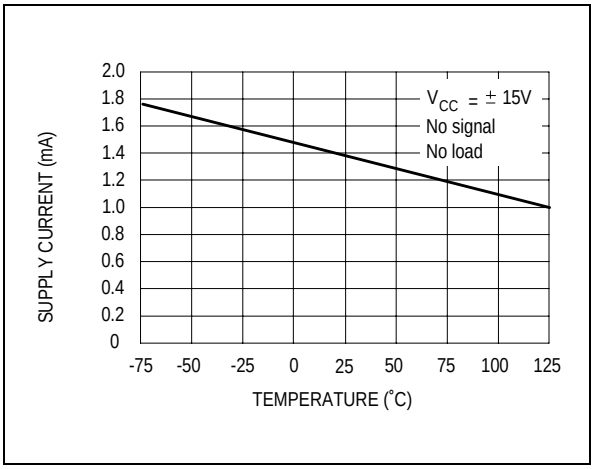

COMMON MODE REJECTION RATIO versus FREE AIR TEMPERATURE

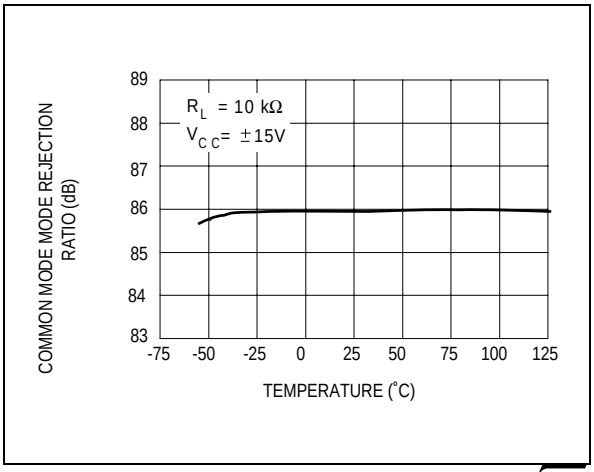

VOLTAGE FOLLOWER LARGE SIGNAL PULSE RESPONSE

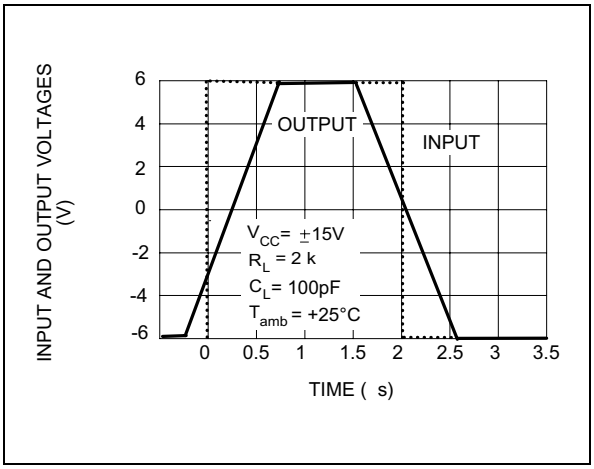

OUTPUT VOLTAGE versus ELAPSED TIME

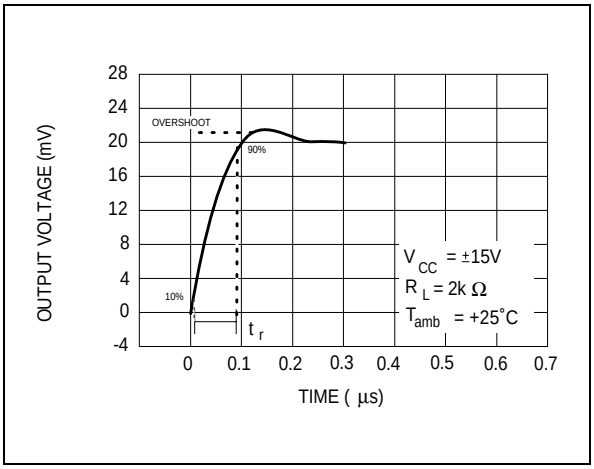

EQUIVALENT INPUT NOISE VOLTAGE versus FREQUENCY

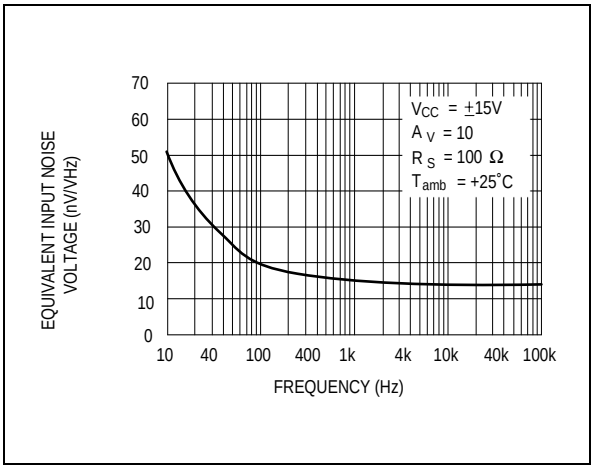

TOTAL HARMONIC DISTORTION versus FREQUENCY

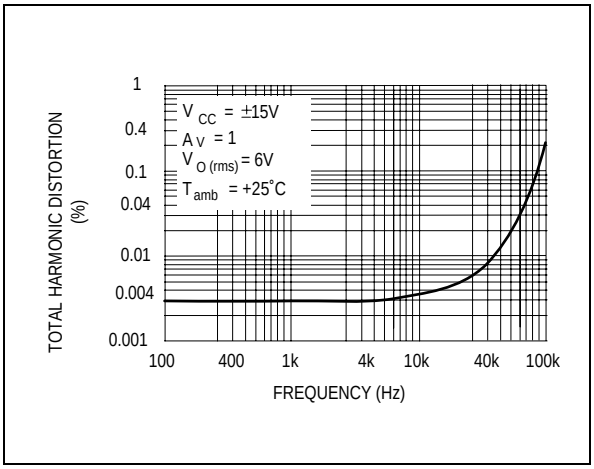

PARAMETER MEASUREMENT INFORMATION

Figure 1 : Voltage Follower

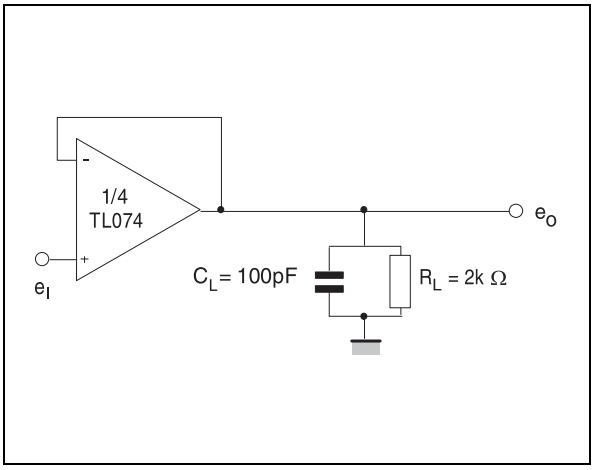

Figure 2 : Gain-of-10 Inverting Amplifier

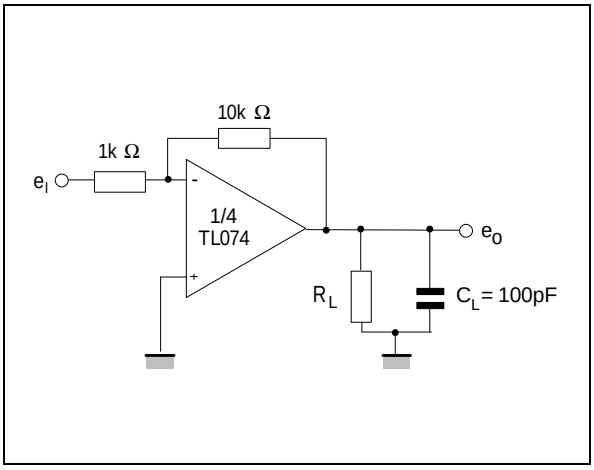

TYPICAL APPLICATIONS

AUDIO DISTRIBUTION AMPLIFIER

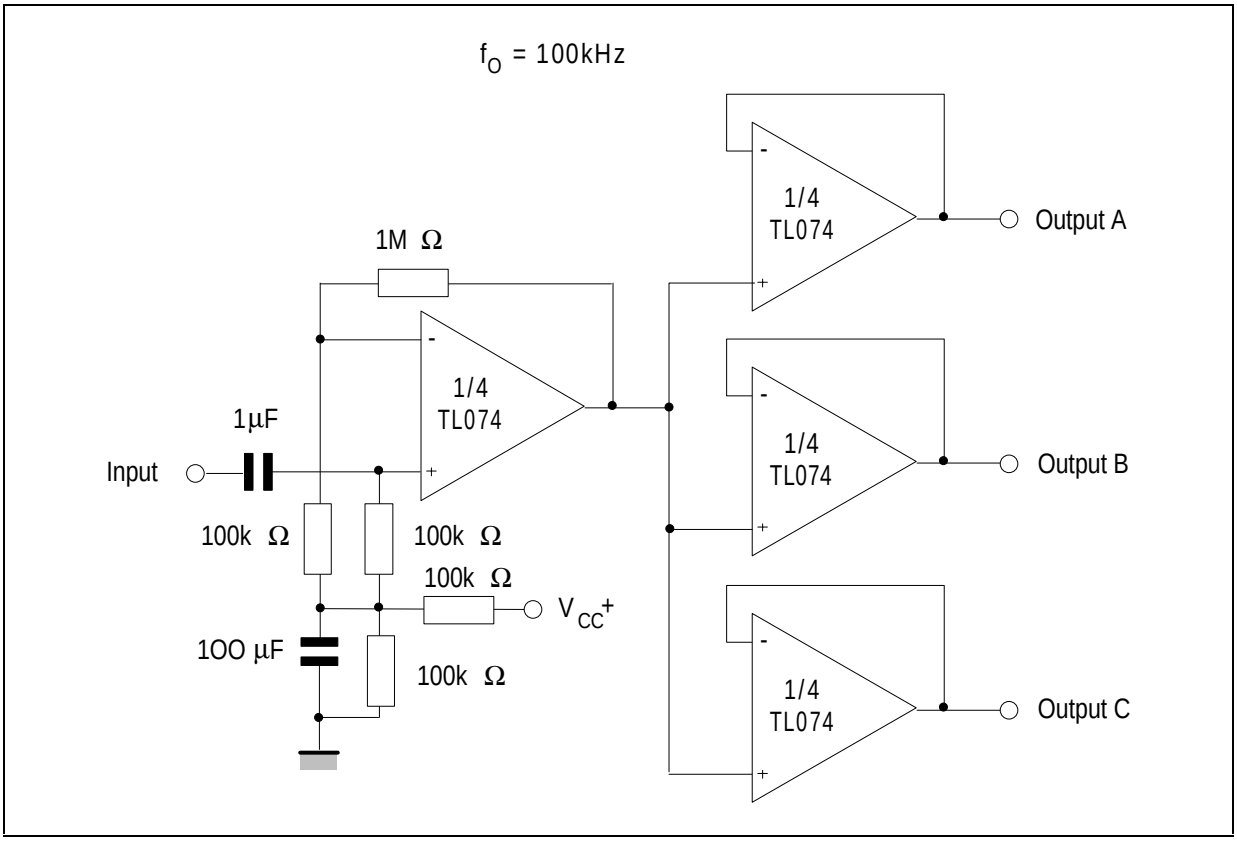

TYPICAL APPLICATIONS (continued)

POSITIVE FEEDBACK BANDPASS FILTER

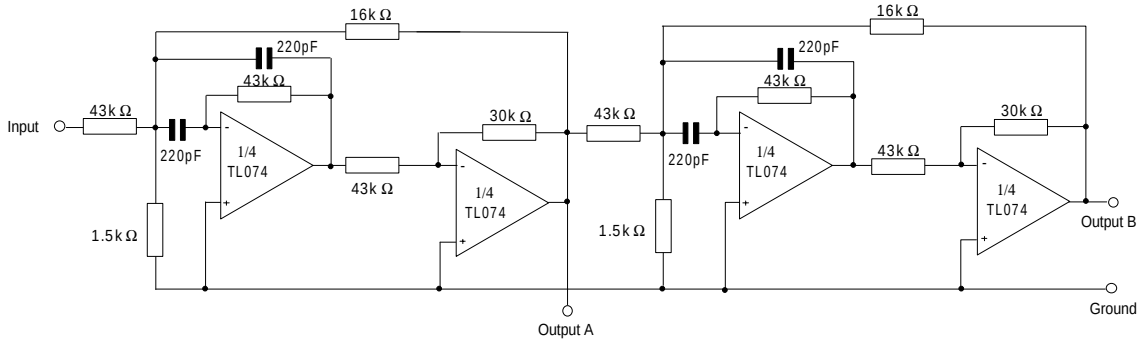

OUTPUT A

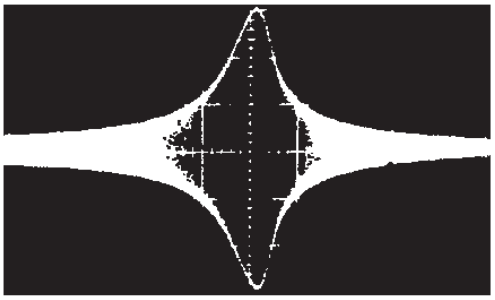

SECOND ORDER BANDPASS FILTER
fo = 100kHz; Q = 30; Gain = 16

OUTPUT B

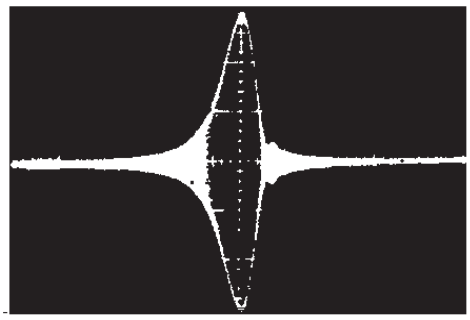

CASCADED BANDPASS FILTER
fo = 100kHz; Q = 69; Gain = 16

PACKAGE MECHANICAL DATA

14 PINS - PLASTIC DIP

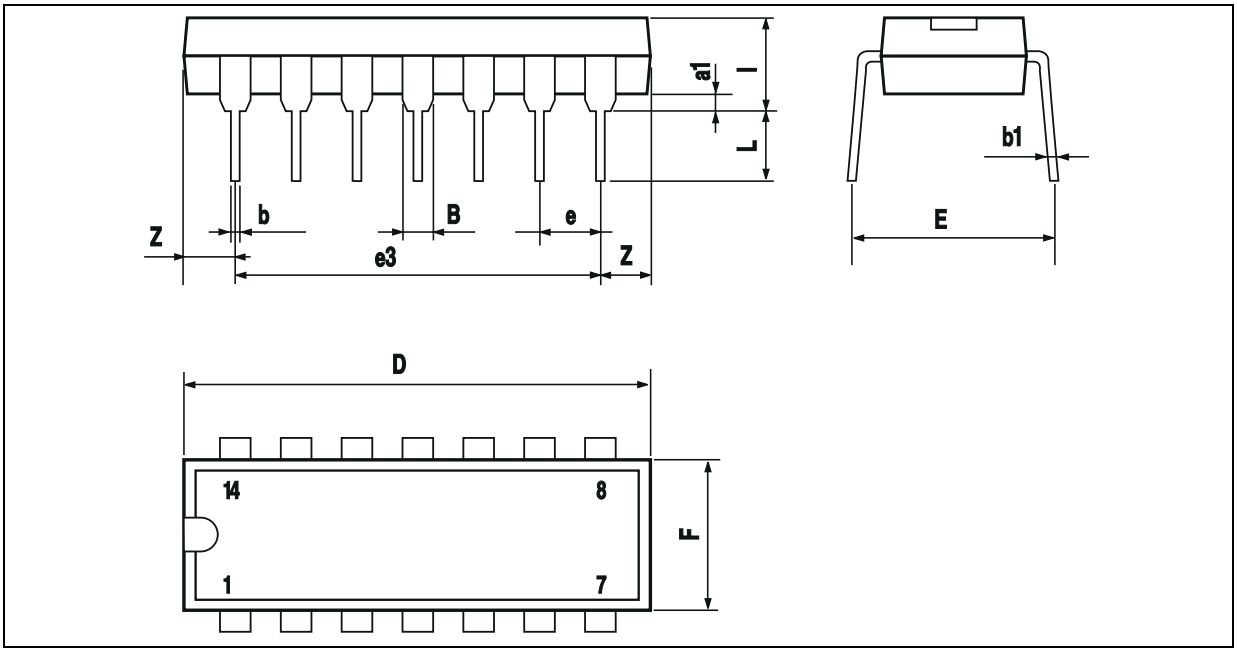

Dim.	Millimeters			Inches		
	Min.	Typ.	Max.	Min.	Typ.	Max.
a1	0.51			0.020		
B	1.39		1.65	0.055		0.065
b		0.5			0.020	
b1		0.25			0.010	
D			20			0.787
E		8.5			0.335	
e		2.54			0.100	
e3		15.24			0.600	
F			7.1			0.280
i			5.1			0.201
L		3.3			0.130	
Z	1.27		2.54	0.050		0.100

PACKAGE MECHANICAL DATA

14 PINS - PLASTIC MICROPACKAGE (SO)

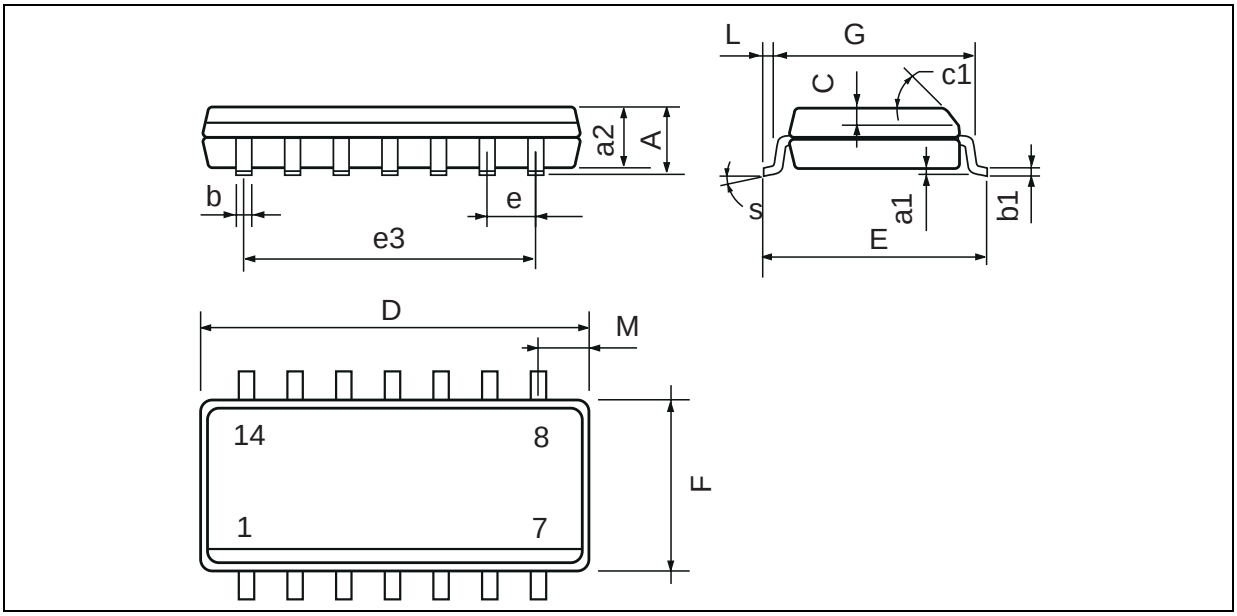

Dim.	Millimeters			Inches		
	Min.	Typ.	Max.	Min.	Typ.	Max.
A			1.75			0.069
a1	0.1		0.2	0.004		0.008
a2			1.6			0.063
b	0.35		0.46	0.014		0.018
b1	0.19		0.25	0.007		0.010
C		0.5			0.020	
c1	45° (typ.)					
D (1)	8.55		8.75	0.336		0.344
E	5.8		6.2	0.228		0.244
e		1.27			0.050	
e3		7.62			0.300	
F (1)	3.8		4.0	0.150		0.157
G	4.6		5.3	0.181		0.208
L	0.5		1.27	0.020		0.050
M			0.68			0.027
S	8° (max.)					

Note : (1) D and F do not include mold flash or protrusions - Mold flash or protrusions shall not exceed 0.15mm (.066 inc) ONLY FOR DATA BOOK.

Information furnished is believed to be accurate and reliable. However, STMicroelectronics assumes no responsibility for the consequences of use of such information nor for any infringement of patents or other rights of third parties which may result from its use. No license is granted by implication or otherwise under any patent or patent rights of STMicroelectronics. Specifications mentioned in this publication are subject to change without notice. This publication supersedes and replaces all information previously supplied. STMicroelectronics products are not authorized for use as critical components in life support devices or systems without express written approval of STMicroelectronics.
© The ST logo is a registered trademark of STMicroelectronics

© 2001 STMicroelectronics - Printed in Italy - All Rights Reserved
STMicroelectronics GROUP OF COMPANIES
Australia - Brazil - China - Finland - France - Germany - Hong Kong - India - Italy - Japan - Malaysia - Malta - Morocco
Singapore - Spain - Sweden - Switzerland - United Kingdom
© http://www.st.com

ENTEGRECİ

Bu belge www.entegreci.com üzerinden sunulmaktadır.

Elektronik komponent tedarikinde Entegreci

Entegreci, Eskişehir merkezli, Türkiye geneline satış yapan bir elektronik komponent mağazasıdır. Entegreler (IC), mikrodenetleyiciler, transistörler, diyotlar, pasif elemanlar, konnektörler, modüller ve geliştirme kartları tek adetten seri üretim adetlerine kadar satılır. Ürün sayfalarında güncel stok durumunu, fiyatı ve datasheet bağlantısını bulabilirsiniz.

Parça koduyla arama

Üretici parça numarasını yazın; stok ve fiyatı hemen görün.

www.entegreci.com

Ürün kategorileri

Entegreden kapasitöre tüm elektronik komponent kategorileri.

Kategorilere göz atın

Üreticiler

Aradığınız üreticinin ürünlerini tek sayfada inceleyin.

Üreticileri görün

Toplu alım ve teklif

Listede olmayan ya da yüksek adetli parçalar için teklif isteyin.

Teklif isteyin

www.entegreci.com | **destek@entegreci.com** | **0850 305 90 34**

Entegreci is an online electronic components store based in Türkiye. Search by manufacturer part number to see stock, prices and datasheets for integrated circuits, microcontrollers, transistors, passive components and connectors, or request a quote for parts that are not listed.

Bu sayfa Entegreci tarafından eklenmiştir. Belgenin önceki sayfaları asıl yayıncısına aittir ve içeriği değiştirilmemiştir; en güncel sürüm için belgenin yayıncısına başvurun.