TL061

Low power JFET single operational amplifiers

Features

- Very low power consumption: 200 µA
- Wide common-mode (up to V_{CC}^+) and differential voltage ranges
- Low input bias and offset currents
- Output short-circuit protection
- High input impedance JFET input stage
- Internal frequency compensation
- Latch-up free operation
- High slew rate: 3.5 V/µs

Description

The TL061 is a high-speed JFET input single operational amplifier, that incorporates well-matched, high-voltage JFET and bipolar transistors in a monolithic integrated circuit.

The device features high slew rates, low input bias and offset currents, and low offset voltage temperature coefficient.

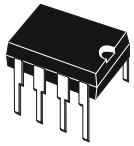

N
DIP8
(Plastic package)

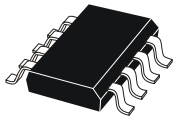

D
SO-8
(Plastic micropackage)

Pin connections
(top view)

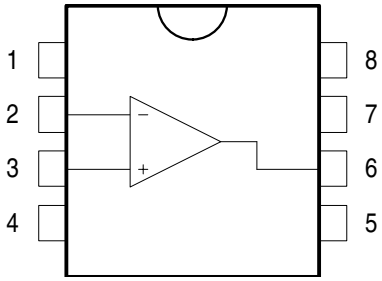

1 - Offset null 1
2 - Inverting input
3 - Non-inverting input
4 - V_{CC}^-
5 - Offset null 2
6 - Output
7 - V_{CC}^+
8 - N.C.

1 Schematic diagram

Figure 1. Schematic diagram

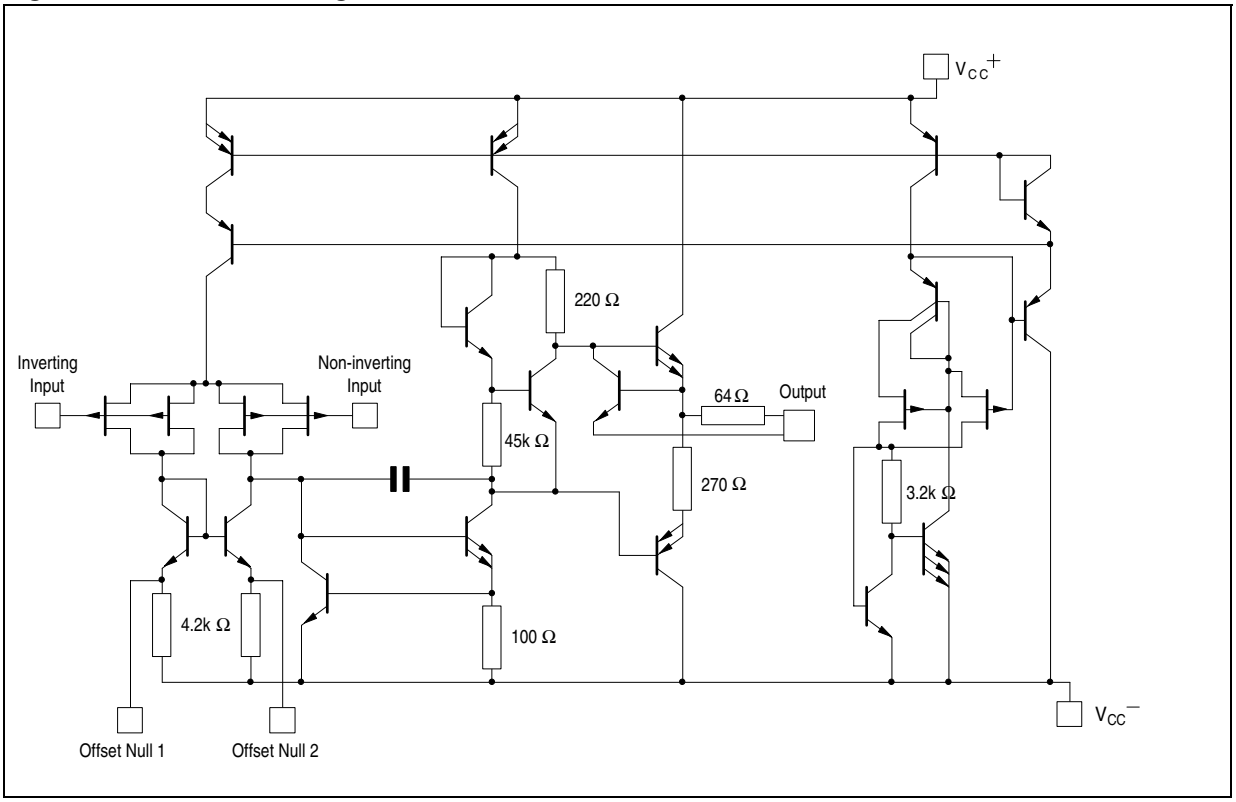

Figure 2. Input offset voltage null circuit

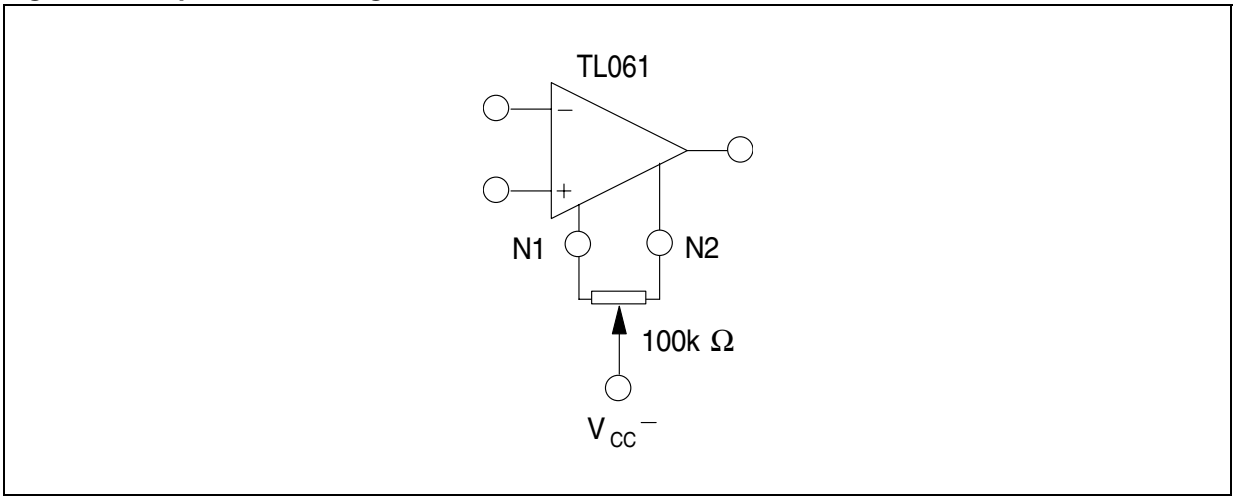

2 Absolute maximum ratings and operating conditions

Table 1. Absolute maximum ratings

Symbol	Parameter	Value			Unit
		TL061M, AM, BM	TL061I, AI, BI	TL061C, AC, BC	
V_{CC}	Supply voltage (1)	±18			V
V_i	Input voltage (2)	±15			V
V_{id}	Differential input voltage(3)	±30			V
P_{tot}	Power dissipation	680			mW
	Output short-circuit duration (4)	Infinite			
T_{stg}	Storage temperature range	-65 to +150	-65 to +150	-65 to +150	°C
R_{thja}	Thermal resistance junction to ambient(5) (6) SO-8 DIP8	 125 85			°C/W
R_{thjc}	Thermal resistance junction to case(5) (6) SO-8 DIP8	 40 41			°C/W
ESD	HBM: human body model(7)	800			V
	MM: machine model(8)	200			V
	CDM: charged device model(9)	1.5			kV

1. All voltage values, except differential voltage, are with respect to the zero reference level (ground) of the supply voltages where the zero reference level is the midpoint between V_{CC}^+ and V_{CC}^-.
2. The magnitude of the input voltage must never exceed the magnitude of the supply voltage or 15 volts, whichever is less.
3. Differential voltages are the non-inverting input terminal with respect to the inverting input terminal.
4. The output may be shorted to ground or to either supply. Temperature and/or supply voltages must be limited to ensure that the dissipation rating is not exceeded.
5. Short-circuits can cause excessive heating and destructive dissipation.
6. Rth are typical values.
7. Human body model: 100 pF discharged through a 1.5 kΩ resistor between two pins of the device, done for all couples of pin combinations with other pins floating.
8. Machine model: a 200 pF cap is charged to the specified voltage, then discharged directly between two pins of the device with no external series resistor (internal resistor < 5 Ω), done for all couples of pin combinations with other pins floating.
9. Charged device model: all pins plus package are charged together to the specified voltage and then discharged directly to the ground.

Table 2. Operating conditions

Symbol	Parameter	TL061M, AM, BM	TL061I, AI, BI	TL061C, AC, BC	Unit
V_{CC}	Supply voltage range	6 to 36			V
T_{oper}	Operating free-air temperature range	-55 to +125	-40 to +105	0 to +70	°C

3 Electrical characteristics

Table 3. V_{CC} = ±15 V, T_{amb} = +25° C (unless otherwise specified)

Symbol	Parameter	TL061M			TL061I			TL061C			Unit
		Min.	Typ.	Max.	Min.	Typ.	Max.	Min.	Typ.	Max.	
V_{io}	Input offset voltage (R_S = 50Ω) T_{amb} = +25°C $T_{min} \le T_{amb} \le T_{max}$		3	6 9		3	6 9		3	15 20	mV
DV_{io}	Temperature coefficient of input offset voltage (R_S = 50Ω)		10			10			10		µV/°C
I_{io}	Input offset current (1) T_{amb} = +25°C $T_{min} \le T_{amb} \le T_{max}$		5	100 20		5	100 10		5	200 5	pA nA
I_{ib}	Input bias current (1) T_{amb} = +25°C $T_{min} \le T_{amb} \le T_{max}$		30	200 20		30	200 20		30	400 10	pA nA
V_{icm}	Input common mode voltage range	±11.5	+15 -12		±11.5	+15 -12		±11	+15 -12		V
V_{opp}	Output voltage swing (R_L = 10kΩ) T_{amb} = +25°C $T_{min} \le T_{amb} \le T_{max}$	20 20	27		20 20	27		20 20	27		V
A_{vd}	Large signal voltage gain R_L = 10kΩ, V_o = ±10V, T_{amb} = +25°C $T_{min} \le T_{amb} \le T_{max}$	4 4	6		4 4	6		3 3	6		V/mV
GBP	Gain bandwidth product T_{amb}= +25°C, R_L=10kΩ, C_L=100pF		1			1			1		MHz
R_i	Input resistance		10^{12}			10^{12}			10^{12}		Ω
CMR	Common mode rejection ratio R_S = 50Ω	80	86		80	86		70	76		dB
SVR	Supply voltage rejection ratio R_S = 50Ω	80	95		80	95		70	95		dB
I_{CC}	Supply current, no load T_{amb} = +25°C, no load, no signal		200	250		200	250		200	250	µA
P_D	Total power consumption T_{amb} = +25°C, no load, no signal		6	7.5		6	7.5		6	7.5	mW
SR	Slew rate V_i= 10V, R_L= 10kΩ, C_L= 100pF, A_V=1	1.5	3.5		1.5	3.5		1.5	3.5		V/µs
t_r	Rise time V_i= 20mV, R_L=10kΩ, C_L=100pF, A_V=1		0.2			0.2			0.2		µs

Table 3. V_{CC} = ±15 V, T_{amb} = +25° C (unless otherwise specified) (continued)

Symbol	Parameter	TL061M			TL061I			TL061C			Unit
		Min.	Typ.	Max.	Min.	Typ.	Max.	Min.	Typ.	Max.	
K_{ov}	Overshoot factor (see *Figure 16*) V_i= 20mV, R_L= 10kΩ, C_L=100pF, A_v=1		10			10			10		%
e_n	Equivalent input noise voltage R_S = 100Ω, f = 1kHz		42			42			42		$\frac{nV}{\sqrt{Hz}}$

1. The input bias currents of a FET-input operational amplifier are normal junction reverse currents, which are temperature sensitive. Pulse techniques must be used that will maintain the junction temperature as close to the ambient temperature as possible.

Table 4. V_{CC} = ±15 V, T_{amb} = +25° C (unless otherwise specified)

Symbol	Parameter	TL061AC, AI, AM			TL061BC, BI, BM			Unit
		Min.	Typ.	Max.	Min.	Typ.	Max.	
V_{io}	Input offset voltage (R_S = 50Ω) T_{amb} = +25°C $T_{min} \le T_{amb} \le T_{max}$		3	6 7.5		2	3 5	mV
DV_{io}	Temperature coefficient of input offset voltage (R_S = 50Ω)		10			10		µV/°C
I_{io}	Input offset current (1) T_{amb} = +25°C $T_{min} \le T_{amb} \le T_{max}$		5	100 3		5	100 3	pA nA
I_{ib}	Input bias current (1) T_{amb} = +25°C $T_{min} \le T_{amb} \le T_{max}$		30	200 7		30	200 7	pA nA
V_{icm}	Input common mode voltage range	±11.5	+15 -12		±11	+15 -12		V
V_{opp}	Output voltage swing (R_L = 10kΩ) T_{amb} = +25°C $T_{min} \le T_{amb} \le T_{max}$	20 20	27		20 20	27		V
A_{vd}	Large signal voltage gain (R_L = 10kΩ, V_o = ±10V) T_{amb} = +25°C $T_{min} \le T_{amb} \le T_{max}$	4 4	6		4 4	6		V/mV
GBP	Gain bandwidth product T_{amb} = +25°C, R_L =10kΩ, C_L = 100pF		1			1		MHz
R_i	Input resistance		10^{12}			10^{12}		Ω
CMR	Common mode rejection ratio (R_S = 50Ω)	80	86		80	86		dB
SVR	Supply voltage rejection ratio (R_S = 50Ω)	80	95		80	95		dB
I_{CC}	Supply current, no load T_{amb} = +25°C, no load, no signal		200	250		200	250	µA
P_D	Total power consumption T_{amb} = +25°C, no load, no signal		6	7.5		6	7.5	mW

Table 4. V_{CC} = ±15 V, T_{amb} = +25° C (unless otherwise specified) (continued)

Symbol	Parameter	TL061AC, AI, AM			TL061BC, BI, BM			Unit
		Min.	Typ.	Max.	Min.	Typ.	Max.	
SR	Slew rate V_i = 10V, R_L = 10kΩ, C_L = 100pF, A_v = 1	1.5	3.5		1.5	3.5		V/µs
t_r	Rise time V_i = 20mV, R_L = 10kΩ, C_L = 100pF, A_v = 1		0.2			0.2		µs
K_{ov}	Overshoot factor (see *Figure 16*) V_i = 20mV, R_L = 10kΩ, C_L = 100pF, A_v = 1		10			10		%
e_n	Equivalent input noise voltage R_S = 100Ω, f = 1KHz		42			42		$\frac{nV}{\sqrt{Hz}}$

1. The input bias currents of a FET-input operational amplifier are normal junction reverse currents, which are temperature sensitive. Pulse techniques must be used that will maintain the junction temperature as close to the ambient temperature as possible

Figure 3. Maximum peak-to-peak output voltage versus supply voltage

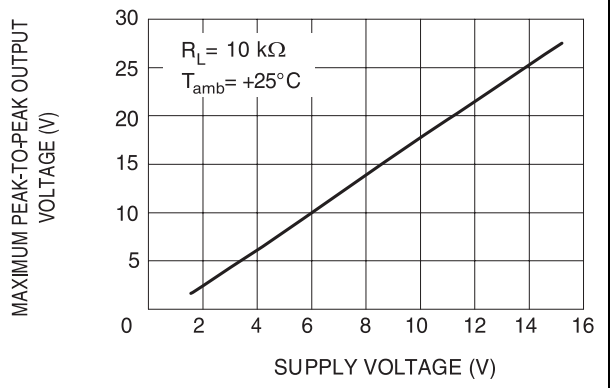

Figure 4. Maximum peak-to-peak output voltage versus free air temperature

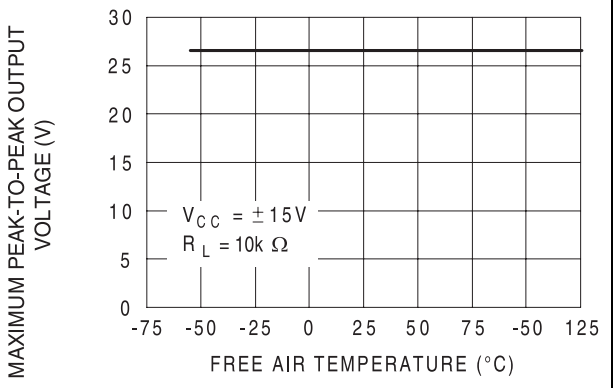

Figure 5. Maximum peak-to-peak output voltage versus load resistance

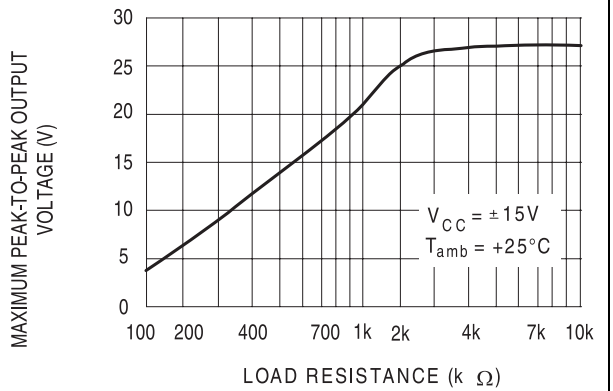

Figure 6. Maximum peak-to-peak output voltage versus frequency

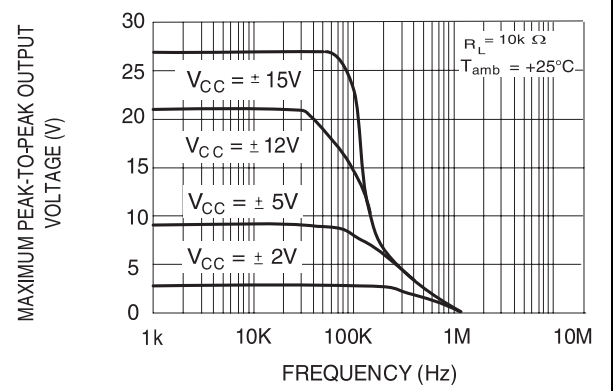

Figure 7. Differential voltage amplification versus free air temperature

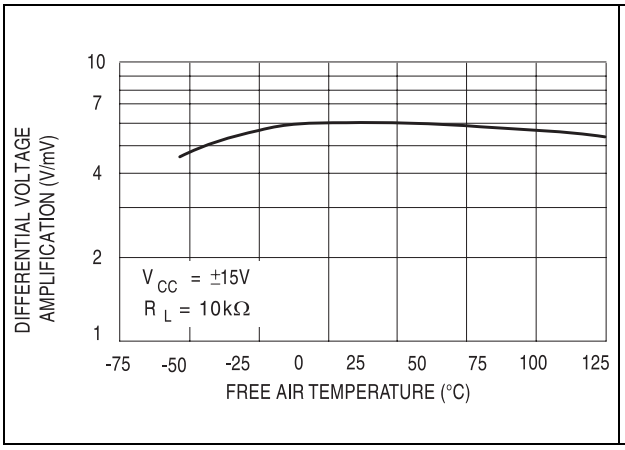

Figure 8. Large signal differential voltage amplification and phase shift versus frequency

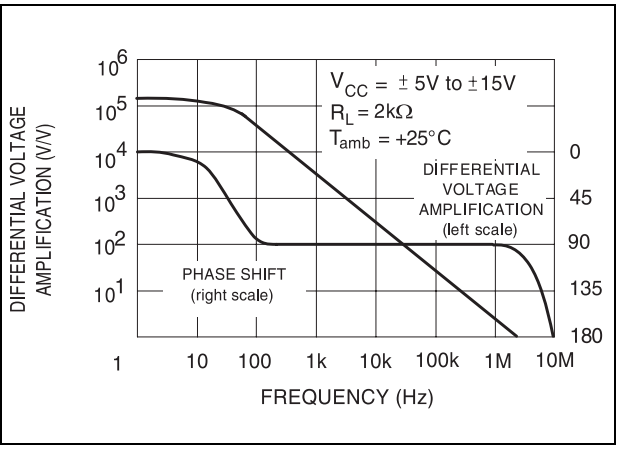

Figure 9. Supply current per amplifier versus supply voltage

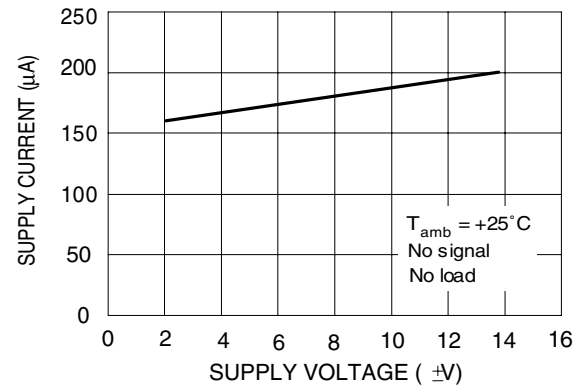

Figure 10. Supply current per amplifier versus free air temperature

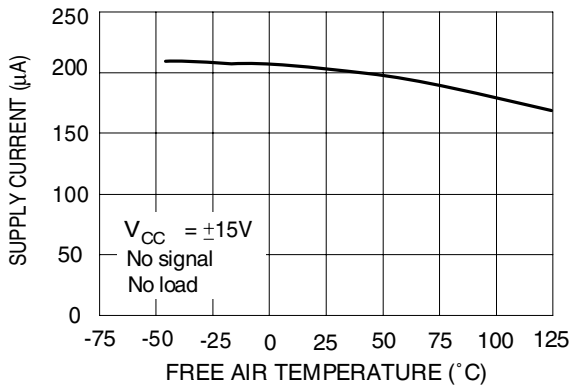

Figure 11. Total power dissipated versus free air temperature

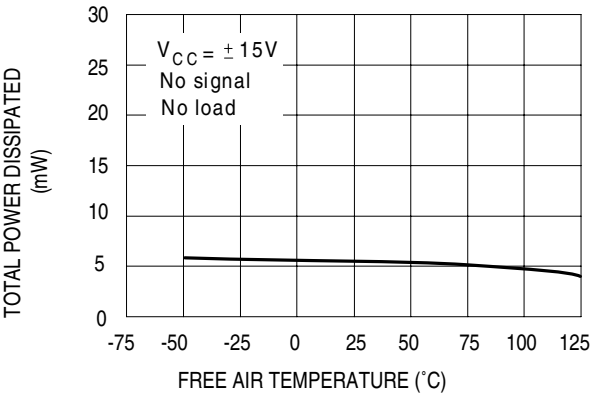

Figure 12. Common mode rejection ratio versus free air temperature

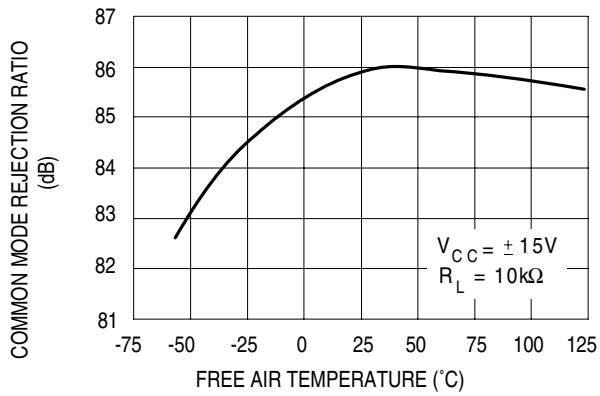

Figure 13. Normalized unity gain bandwidth slew rate, and phase shift versus temperature

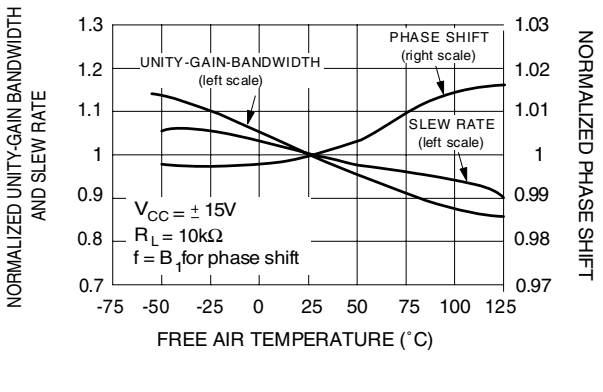

Figure 14. Input bias current versus free air temperature

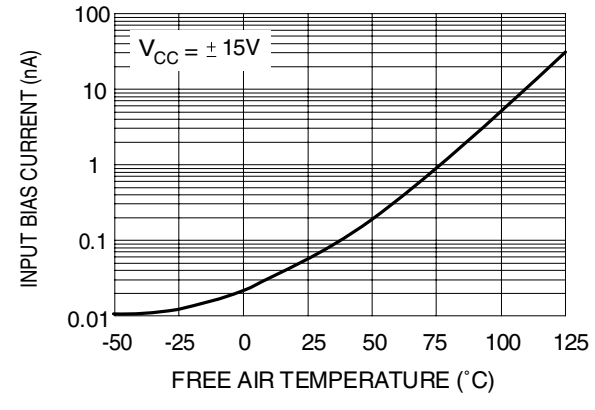

Figure 15. Voltage follower large signal pulse response

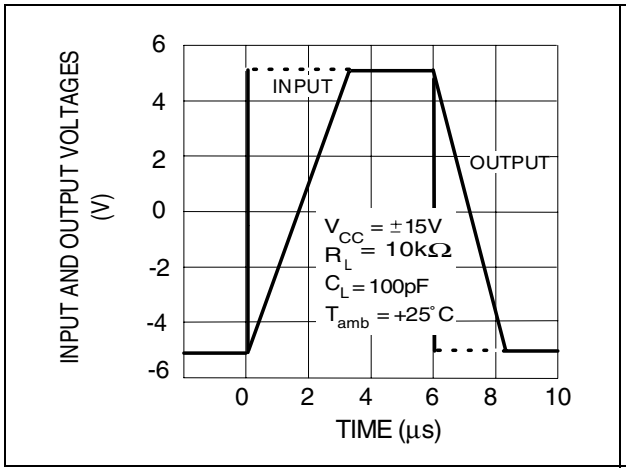

Figure 16. Output voltage versus elapsed time

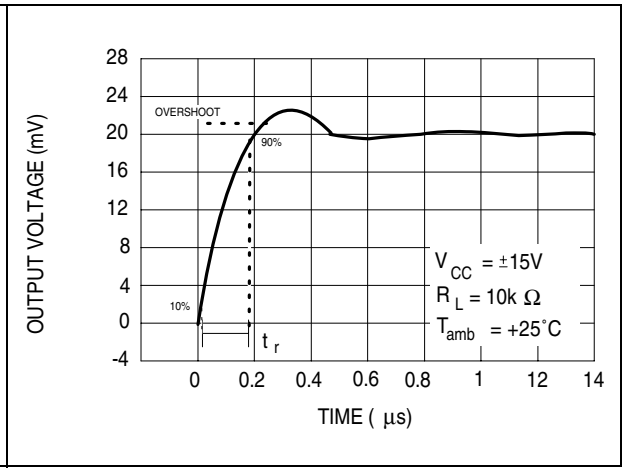

Figure 17. Equivalent input noise voltage versus frequency

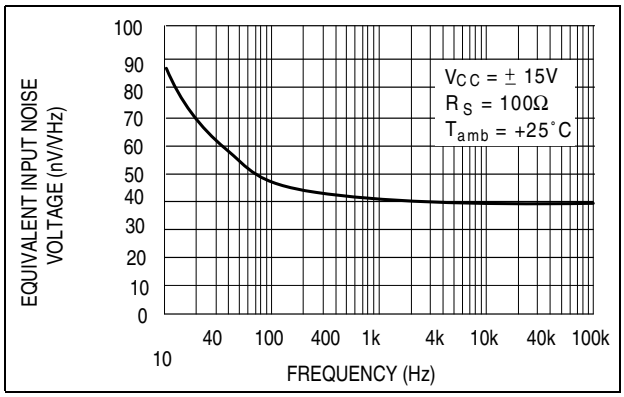

4 Parameter measurement information

Figure 18. Voltage follower

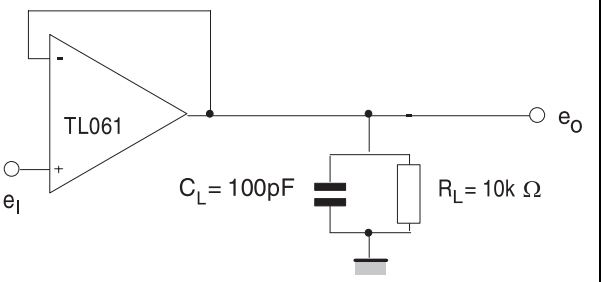

Figure 19. Gain-of-10 inverting amplifier

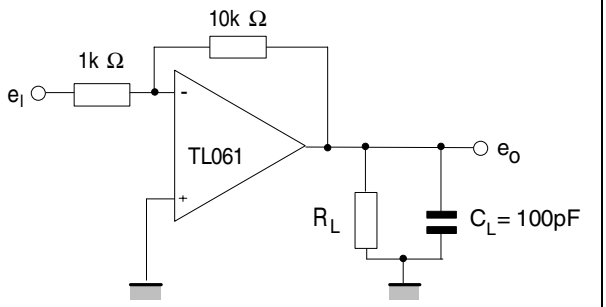

5 Package information

In order to meet environmental requirements, ST offers these devices in different grades of ECOPACK® packages, depending on their level of environmental compliance. ECOPACK® specifications, grade definitions and product status are available at: www.st.com. ECOPACK® is an ST trademark.

5.1 DIP8 package information

Figure 20. DIP8 package mechanical drawing

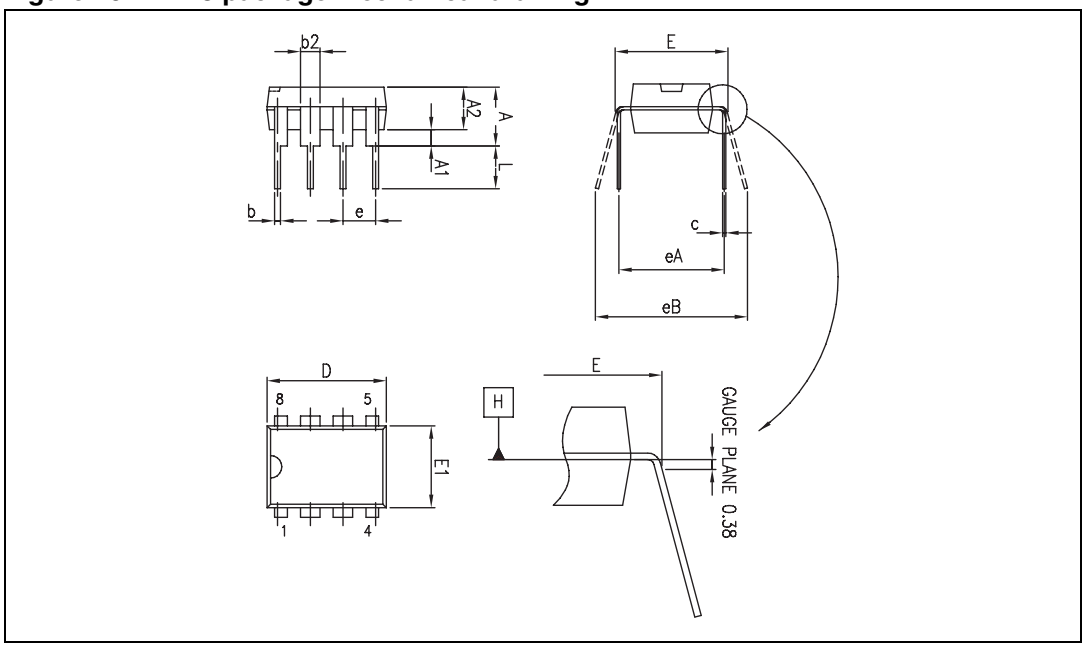

Table 5. DIP8 package mechanical data

Ref.	Dimensions					
	Millimeters			Inches		
	Min.	Typ.	Max.	Min.	Typ.	Max.
A			5.33			0.210
A1	0.38			0.015		
A2	2.92	3.30	4.95	0.115	0.130	0.195
b	0.36	0.46	0.56	0.014	0.018	0.022
b2	1.14	1.52	1.78	0.045	0.060	0.070
c	0.20	0.25	0.36	0.008	0.010	0.014
D	9.02	9.27	10.16	0.355	0.365	0.400
E	7.62	7.87	8.26	0.300	0.310	0.325
E1	6.10	6.35	7.11	0.240	0.250	0.280
e		2.54			0.100	
eA		7.62			0.300	
eB			10.92			0.430
L	2.92	3.30	3.81	0.115	0.130	0.150

5.2 SO-8 package information

Figure 21. SO-8 package mechanical drawing

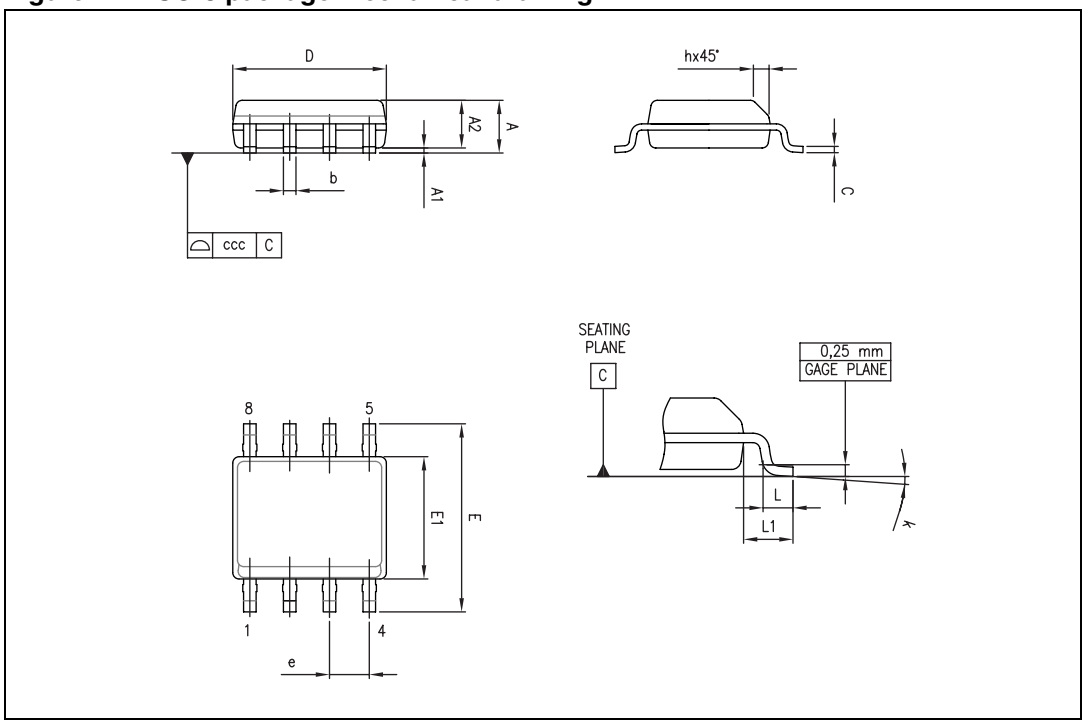

Table 6. SO-8 package mechanical data

Ref.	Dimensions					
	Millimeters			Inches		
	Min.	Typ.	Max.	Min.	Typ.	Max.
A			1.75			0.069
A1	0.10		0.25	0.004		0.010
A2	1.25			0.049		
b	0.28		0.48	0.011		0.019
c	0.17		0.23	0.007		0.010
D	4.80	4.90	5.00	0.189	0.193	0.197
E	5.80	6.00	6.20	0.228	0.236	0.244
E1	3.80	3.90	4.00	0.150	0.154	0.157
e		1.27			0.050	
h	0.25		0.50	0.010		0.020
L	0.40		1.27	0.016		0.050
L1		1.04			0.040	
k	0		8°	1°		8°
ccc			0.10			0.004

6 Ordering information

Table 7. Order codes

Part number	Temperature range	Package	Packing	Marking
TL061MN TL061AMN TL061BMN	-55°C, +125°C	DIP8	Tube	TL061MN TL061AMN TL061BMN
TL061MD/MDT TL061AMD/MDT TL061BMD/BMDT		SO-8	Tube or tape & reel	061M 061AM 061BM
TL061IN TL061AIN TL061BIN	-40°C, +105°C	DIP8	Tube	TL061IN TL061AIN TL061BIN
TL061ID/IDT TL061AID/AIDT TL061BID/BIDT		SO-8	Tube or tape & reel	061I 061AI 061BI
TL061CN TL061ACN TL061BCN	0°C, +70°C	DIP8	Tube	TL061CN TL061ACN TL061BCN
TL061CD/CDT TL061ACD/ACDT TL061BCD/BCDT		SO-8	Tube or tape & reel	061C 061AC 061BC

7 Revision history

Table 8. Document revision history

Date	Revision	Changes
13-Nov-2001	1	Initial release.
27-Jul-2007	2	Added values for R_{thja} and R_{thjc} in *Table 1: Absolute maximum ratings*. Added *Table 2: Operating conditions*. Updated format.
05-Mar-2009	3	Updated package mechanical drawings and data in *Chapter 5: Package information*.

Please Read Carefully:

Information in this document is provided solely in connection with ST products. STMicroelectronics NV and its subsidiaries (“ST”) reserve the right to make changes, corrections, modifications or improvements, to this document, and the products and services described herein at any time, without notice.

All ST products are sold pursuant to ST’s terms and conditions of sale.

Purchasers are solely responsible for the choice, selection and use of the ST products and services described herein, and ST assumes no liability whatsoever relating to the choice, selection or use of the ST products and services described herein.

No license, express or implied, by estoppel or otherwise, to any intellectual property rights is granted under this document. If any part of this document refers to any third party products or services it shall not be deemed a license grant by ST for the use of such third party products or services, or any intellectual property contained therein or considered as a warranty covering the use in any manner whatsoever of such third party products or services or any intellectual property contained therein.

UNLESS OTHERWISE SET FORTH IN ST’S TERMS AND CONDITIONS OF SALE ST DISCLAIMS ANY EXPRESS OR IMPLIED WARRANTY WITH RESPECT TO THE USE AND/OR SALE OF ST PRODUCTS INCLUDING WITHOUT LIMITATION IMPLIED WARRANTIES OF MERCHANTABILITY, FITNESS FOR A PARTICULAR PURPOSE (AND THEIR EQUIVALENTS UNDER THE LAWS OF ANY JURISDICTION), OR INFRINGEMENT OF ANY PATENT, COPYRIGHT OR OTHER INTELLECTUAL PROPERTY RIGHT.

UNLESS EXPRESSLY APPROVED IN WRITING BY AN AUTHORIZED ST REPRESENTATIVE, ST PRODUCTS ARE NOT RECOMMENDED, AUTHORIZED OR WARRANTED FOR USE IN MILITARY, AIR CRAFT, SPACE, LIFE SAVING, OR LIFE SUSTAINING APPLICATIONS, NOR IN PRODUCTS OR SYSTEMS WHERE FAILURE OR MALFUNCTION MAY RESULT IN PERSONAL INJURY, DEATH, OR SEVERE PROPERTY OR ENVIRONMENTAL DAMAGE. ST PRODUCTS WHICH ARE NOT SPECIFIED AS "AUTOMOTIVE GRADE" MAY ONLY BE USED IN AUTOMOTIVE APPLICATIONS AT USER’S OWN RISK.

Resale of ST products with provisions different from the statements and/or technical features set forth in this document shall immediately void any warranty granted by ST for the ST product or service described herein and shall not create or extend in any manner whatsoever, any liability of ST.

ST and the ST logo are trademarks or registered trademarks of ST in various countries.

Information in this document supersedes and replaces all information previously supplied.

The ST logo is a registered trademark of STMicroelectronics. All other names are the property of their respective owners.

© 2009 STMicroelectronics - All rights reserved

STMicroelectronics group of companies

Australia - Belgium - Brazil - Canada - China - Czech Republic - Finland - France - Germany - Hong Kong - India - Israel - Italy - Japan - Malaysia - Malta - Morocco - Singapore - Spain - Sweden - Switzerland - United Kingdom - United States of America

www.st.com

ENTEGRECİ

Bu belge www.entegreci.com üzerinden sunulmaktadır.

Elektronik komponent tedarikinde Entegreci

Entegreci, Eskişehir merkezli, Türkiye geneline satış yapan bir elektronik komponent mağazasıdır. Entegreler (IC), mikrodenetleyiciler, transistörler, diyotlar, pasif elemanlar, konnektörler, modüller ve geliştirme kartları tek adetten seri üretim adetlerine kadar satılır. Ürün sayfalarında güncel stok durumunu, fiyatı ve datasheet bağlantısını bulabilirsiniz.

Parça koduyla arama

Üretici parça numarasını yazın; stok ve fiyatı hemen görün.

www.entegreci.com

Ürün kategorileri

Entegreden kapasitöre tüm elektronik komponent kategorileri.

Kategorilere göz atın

Üreticiler

Aradığınız üreticinin ürünlerini tek sayfada inceleyin.

Üreticileri görün

Toplu alım ve teklif

Listede olmayan ya da yüksek adetli parçalar için teklif isteyin.

Teklif isteyin

www.entegreci.com | **destek@entegreci.com** | **0850 305 90 34**

Entegreci is an online electronic components store based in Türkiye. Search by manufacturer part number to see stock, prices and datasheets for integrated circuits, microcontrollers, transistors, passive components and connectors, or request a quote for parts that are not listed.

Bu sayfa Entegreci tarafından eklenmiştir. Belgenin önceki sayfaları asıl yayıncısına aittir ve içeriği değiştirilmemiştir; en güncel sürüm için belgenin yayıncısına başvurun.