IRF740

N-channel 400V - 0.46Ω - 10A TO-220 PowerMESH™ II Power MOSFET

General features

Type	V_{DSS} (@Tjmax)	$R_{DS(on)}$	I_D
IRF740	400V	<0.55Ω	10A

- Exceptional dv/dt capability
- 100% avalanche tested
- Low gate charge
- Very low intrinsic capacitances

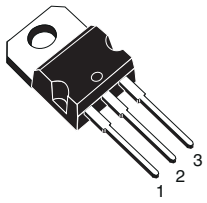

TO-220

Description

The PowerMESH™II is the evolution of the first generation of MESH OVERLAY™. The layout refinements introduced greatly improve the Ron*area figure of merit while keeping the device at the leading edge for what concerns swithing speed, gate charge and ruggedness.

Internal schematic diagram

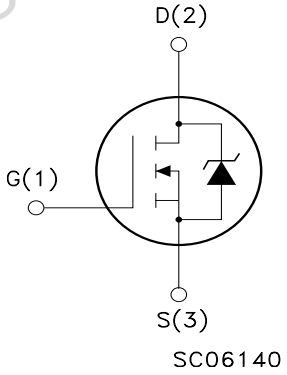

Applications

- Switching application

Obsolete Product(s) - Obsolete Product(s)

Order codes

Part number	Marking	Package	Packaging
IRF740	IRF740@	TO-220	Tube

Contents

1 Electrical ratings 3

2 Electrical characteristics 4

2.1 Electrical characteristics (curves) 6

3 Test circuit 8

4 Package mechanical data 9

5 Revision history 11

Obsolete Product(s) - Obsolete Product(s)

1 Electrical ratings

Table 1. Absolute maximum ratings

Symbol	Parameter	Value	Unit
V_{DS}	Drain-source voltage (V_{GS} = 0)	400	V
V_{DGR}	Drain-gate voltage (R_{GS} = 20 kΩ)	400	V
V_{GS}	Gate- source voltage	± 20	V
I_D	Drain current (continuous) at T_C = 25°C	10	A
I_D	Drain current (continuous) at T_C = 100°C	6.3	A
I_{DM} (1)	Drain current (pulsed)	40	A
P_{tot}	Total dissipation at T_C = 25°C	125	W
	Derating Factor	1.0	W/°C
dv/dt (2)	Peak diode recovery voltage slope	4.0	V/ns
T_{stg}	Storage temperature	-65 to 150	°C
T_j	Max. operating junction temperature		

1. Pulse width limited by safe operating area.
2. I_{SD} ≤10A, di/dt ≤300A/µs, V_{DD} ≤$V_{(BR)DSS}$, Tj ≤T_{JMAX}

Table 2. Thermal data

Rthj-case	Thermal resistance junction-case max	1	°C/W
Rthj-amb	Thermal resistance junction-ambient max	62.5	°C/W
T_J	Maximum lead temperature for soldering purpose	300	°C

Table 3. Avalanche characteristics

Symbol	Parameter	Value	Unit
I_{AR}	Avalanche current, repetitive or not-repetitive (pulse width limited by Tj Max)	10	A
E_{AS}	Single pulse avalanche energy (starting Tj=25°C, Id=Iar, Vdd=50V)	520	mJ

Obsolete Product(s) - Obsolete Product(s)

2 Electrical characteristics

(T_{CASE}=25°C unless otherwise specified)

Table 4. On/off states

Symbol	Parameter	Test conditions	Min.	Typ.	Max.	Unit
$V_{(BR)DSS}$	Drain-source breakdown voltage	I_D = 250 µA, V_{GS}= 0	400			V
I_{DSS}	Zero gate voltage drain current (V_{GS} = 0)	V_{DS} = Max rating, V_{DS} = Max rating @125°C			1 50	µA µA
I_{GSS}	Gate body leakage current (V_{DS} = 0)	V_{GS} = ±20V			± 100	nA
$V_{GS(th)}$	Gate threshold voltage	V_{DS}= V_{GS}, I_D = 250µA	2	3	4	V
$R_{DS(on)}$	Static drain-source on resistance	V_{GS}= 10V, I_D= 5.3A		0.46	0.55	Ω

Table 5. Dynamic

Symbol	Parameter	Test conditions	Min.	Typ.	Max.	Unit
g_{fs} (1)	Forward transconductance	V_{DS} > $I_{D(on)}$ x $R_{DS(on)max}$, I_D = 6A		7		S
C_{iss} C_{oss} C_{rss}	Input capacitance Output capacitance Reverse transfer capacitance	V_{DS} =25V, f=1 MHz, V_{GS}=0		1400 220 27		pF pF pF
$t_{d(on)}$ t_r	Turn-on delay time Rise Time	V_{DD} = 200V, I_D = 5A, R_G = 4.7Ω, V_{GS} = 10V (see Figure 12)		17 10		ns ns
Q_g Q_{gs} Q_{gd}	Total gate charge Gate-source charge Gate-drain charge	V_{DD}=320V, I_D = 10.7A V_{GS} =10V		35 11 12	43	nC nC nC

1. Pulsed: pulse duration=300µs, duty cycle 1.5%

Obsolete Product(s) - Obsolete Product(s)

Table 6. Source drain diode

Symbol	Parameter	Test conditions	Min	Typ.	Max	Unit
I_{SD}	Source-drain current				10	A
I_{SDM}(1)	Source-drain current (pulsed)				40	A
V_{SD}(2)	Forward on voltage	I_{SD}=10A, V_{GS}=0			1.6	V
t_{rr} Q_{rr} I_{RRM}	Reverse recovery time Reverse recovery charge Reverse recovery current	I_{SD}=10A, di/dt = 100A/µs, V_{DD}=100V, Tj=150°C (see Figure 12)		370 3.2 17		ns µC A

1. Pulse width limited by safe operating area
2. Pulsed: pulse duration=300µs, duty cycle 1.5%

Obsolete Product(s) - Obsolete Product(s)

2.1 Electrical characteristics (curves)

Figure 1. Safe operating area

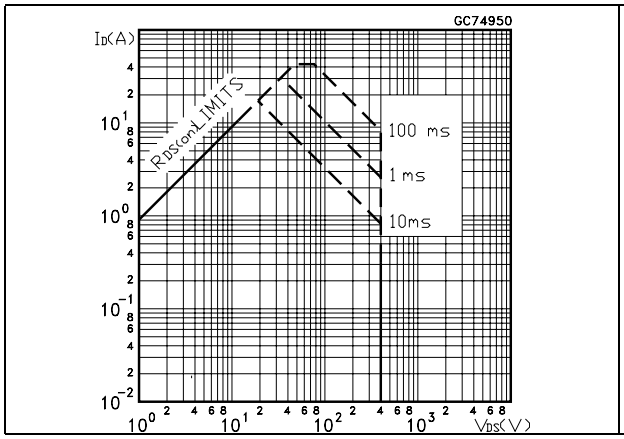

Figure 2. Thermal impedance

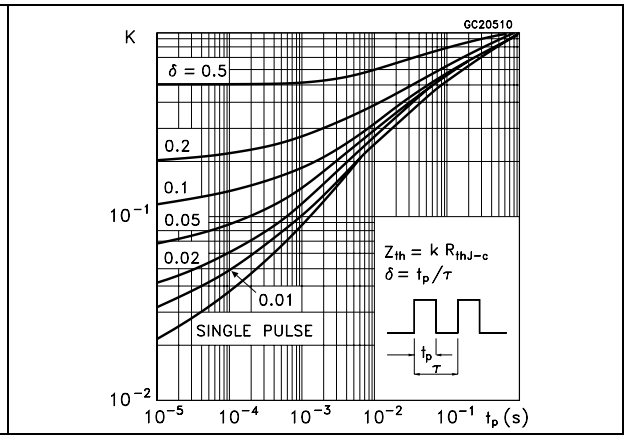

Figure 3. Output characterisics

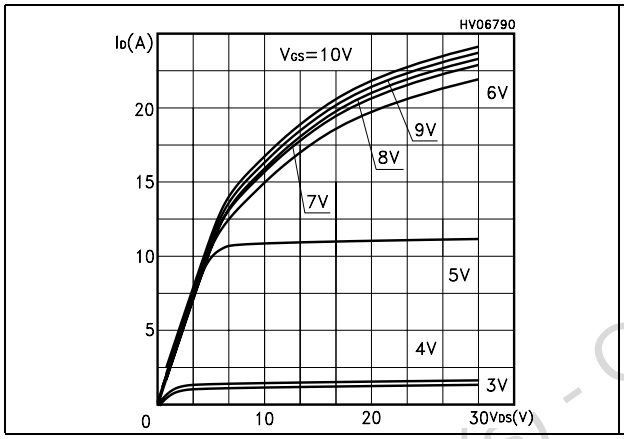

Figure 4. Transfer characteristics

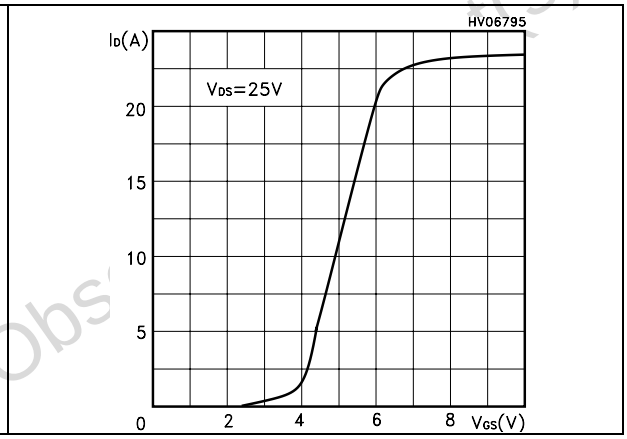

Figure 5. Transconductance

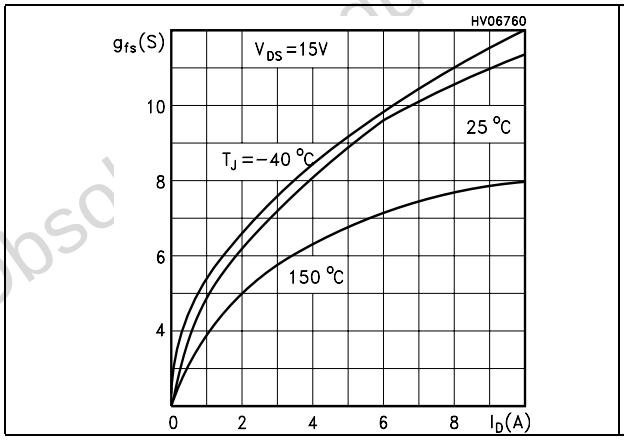

Figure 6. Static drain-source on resistance

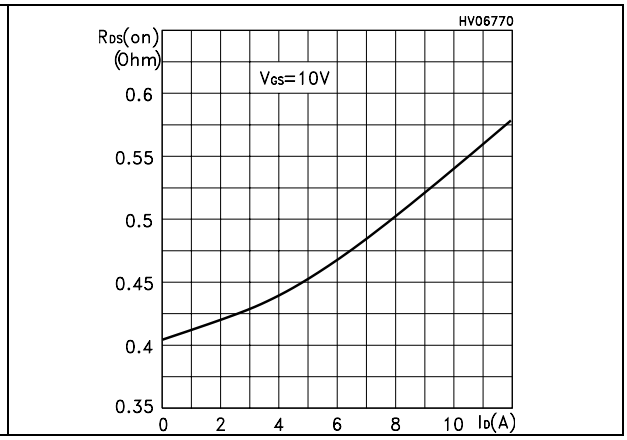

Obsolete Product(s) - Obsolete Product(s)

Figure 7. Gate charge vs gate-source voltage

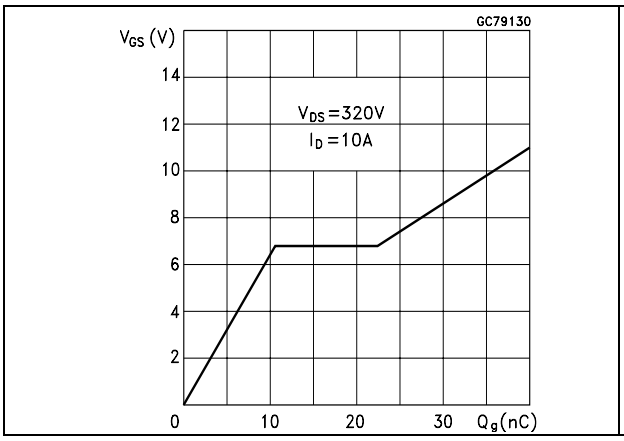

Figure 8. Capacitance variations

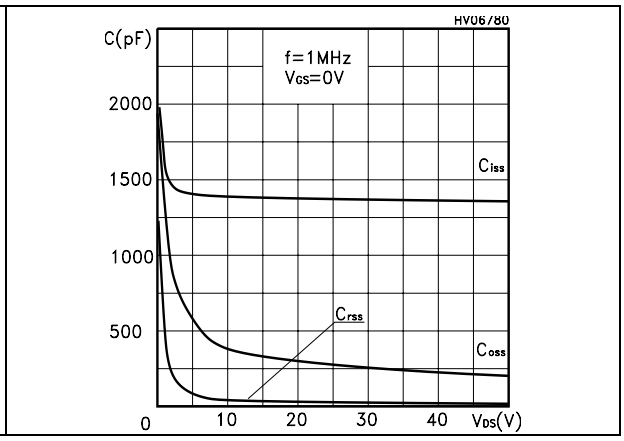

Figure 9. Normalized gate threshold voltage vs temperature

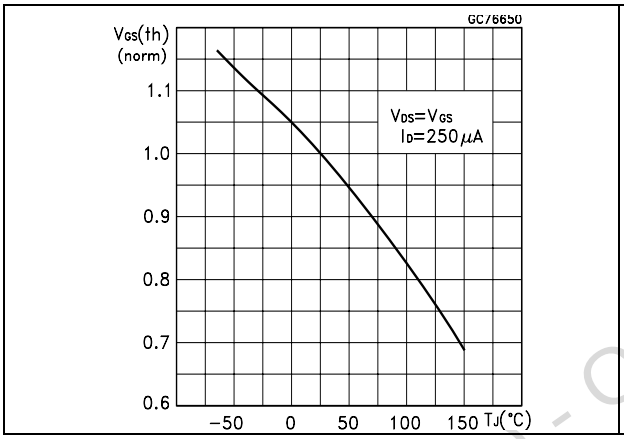

Figure 10. Normalized on resistance vs temperature

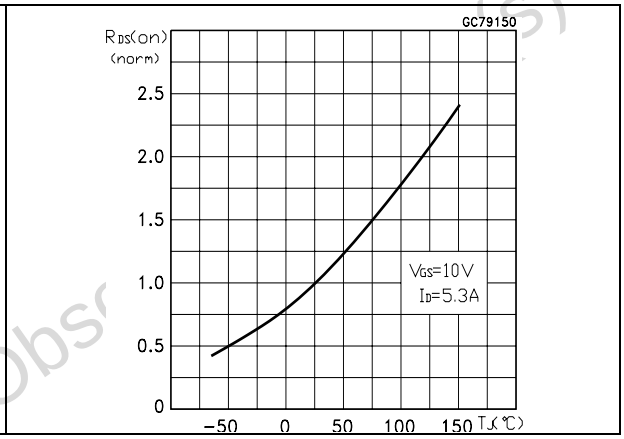

Figure 11. Source-drain diode forward characteristics

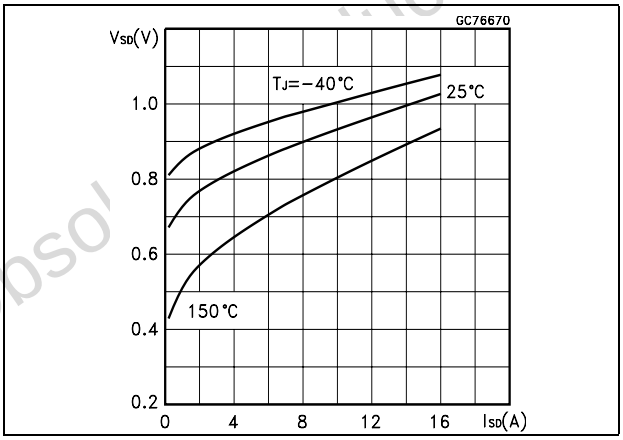

Obsolete Product(s) - Obsolete Product(s)

3 Test circuit

Figure 12. Switching times test circuit for resistive load

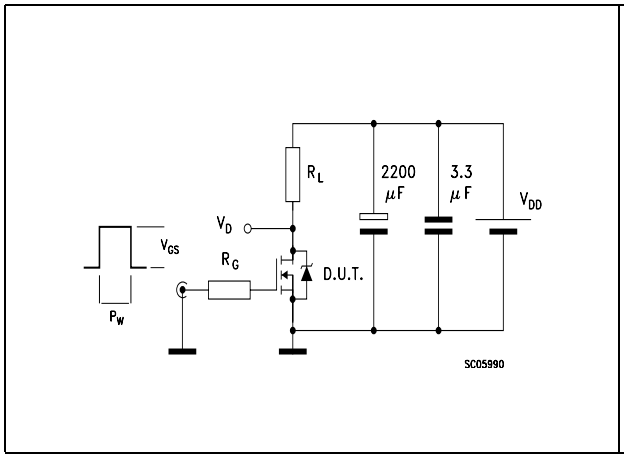

Figure 13. Gate charge test circuit

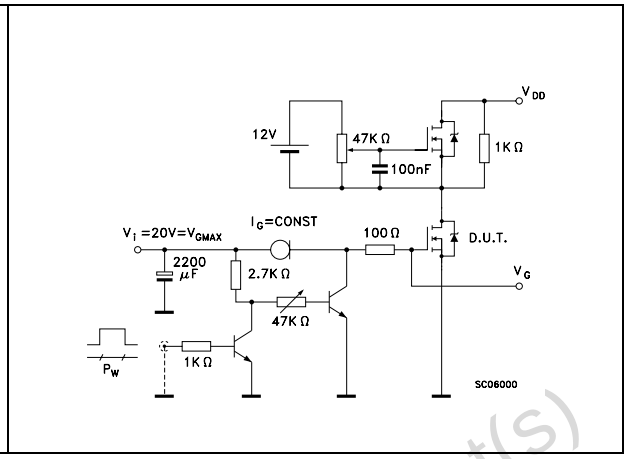

Figure 14. Test circuit for inductive load switching and diode recovery times

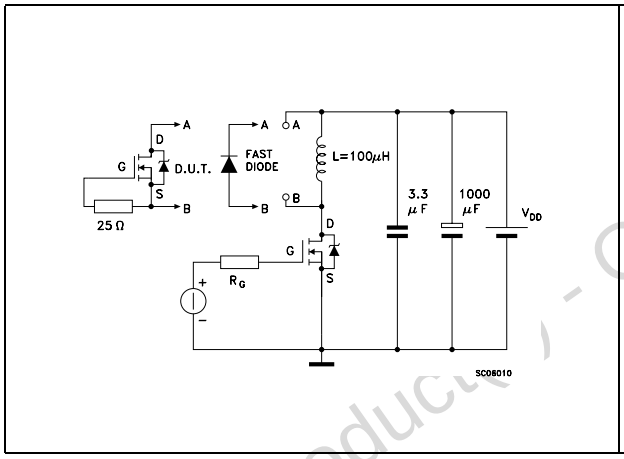

Figure 15. Unclamped Inductive load test circuit

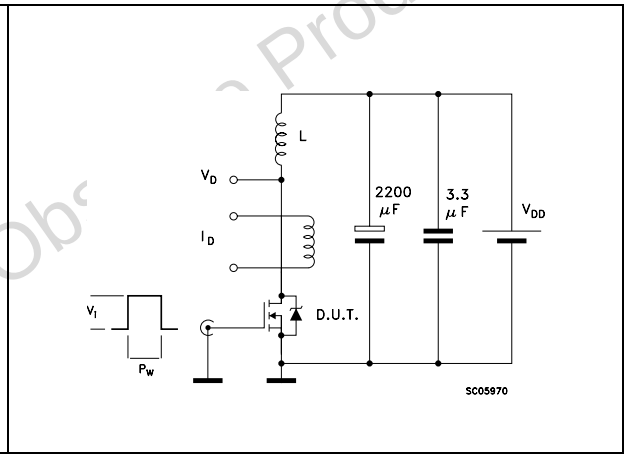

Figure 16. Unclamped inductive waveform

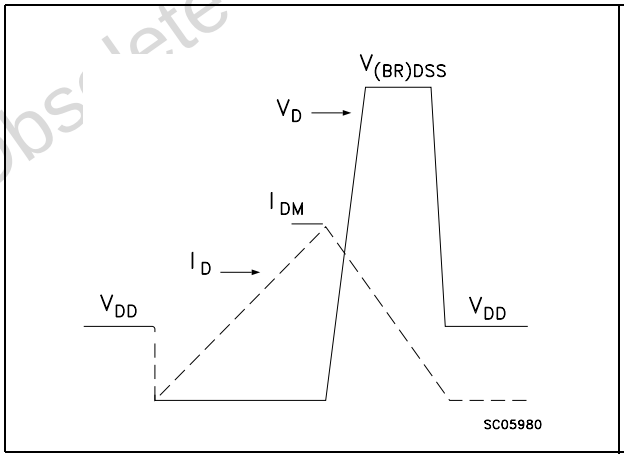

Figure 17. Switching time waveform

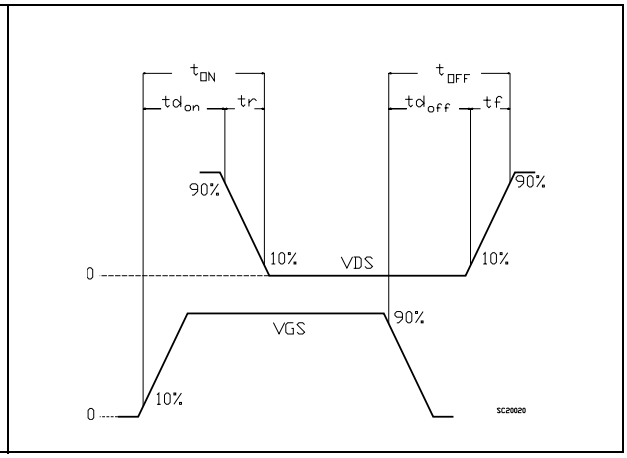

Obsolete Product(s) - Obs Product(s)

4 Package mechanical data

In order to meet environmental requirements, ST offers these devices in ECOPACK® packages. These packages have a Lead-free second level interconnect . The category of second level interconnect is marked on the package and on the inner box label, in compliance with JEDEC Standard JESD97. The maximum ratings related to soldering conditions are also marked on the inner box label. ECOPACK is an ST trademark. ECOPACK specifications are available at: www.st.com

Obsolete Product(s) - Obsolete Product(s)

TO-220 MECHANICAL DATA

DIM.	mm.			inch		
	MIN.	TYP	MAX.	MIN.	TYP.	MAX.
A	4.40		4.60	0.173		0.181
b	0.61		0.88	0.024		0.034
b1	1.15		1.70	0.045		0.066
c	0.49		0.70	0.019		0.027
D	15.25		15.75	0.60		0.620
E	10		10.40	0.393		0.409
e	2.40		2.70	0.094		0.106
e1	4.95		5.15	0.194		0.202
F	1.23		1.32	0.048		0.052
H1	6.20		6.60	0.244		0.256
J1	2.40		2.72	0.094		0.107
L	13		14	0.511		0.551
L1	3.50		3.93	0.137		0.154
L20		16.40			0.645	
L30		28.90			1.137	
øP	3.75		3.85	0.147		0.151
Q	2.65		2.95	0.104		0.116

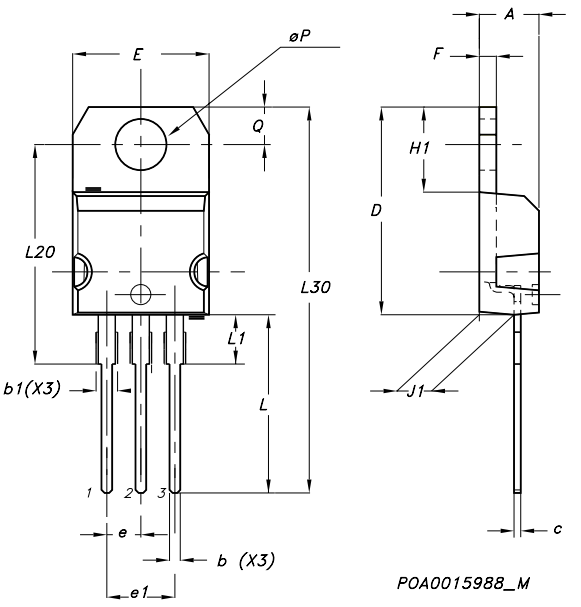

Obsole

5 Revision history

Table 7. Revision history

Date	Revision	Changes
09-Sep-2004	3	Complete version,new datasheet according to PCN DSG/CT/2C14. special marking: IRF740 @
03-Aug-2006	4	New template, no content change

Obsolete Product(s) - Obsolete Product(s)

Please Read Carefully:

Information in this document is provided solely in connection with ST products. STMicroelectronics NV and its subsidiaries (“ST”) reserve the right to make changes, corrections, modifications or improvements, to this document, and the products and services described herein at any time, without notice.

All ST products are sold pursuant to ST’s terms and conditions of sale.

Purchasers are solely responsible for the choice, selection and use of the ST products and services described herein, and ST assumes no liability whatsoever relating to the choice, selection or use of the ST products and services described herein.

No license, express or implied, by estoppel or otherwise, to any intellectual property rights is granted under this document. If any part of this document refers to any third party products or services it shall not be deemed a license grant by ST for the use of such third party products or services, or any intellectual property contained therein or considered as a warranty covering the use in any manner whatsoever of such third party products or services or any intellectual property contained therein.

UNLESS OTHERWISE SET FORTH IN ST’S TERMS AND CONDITIONS OF SALE ST DISCLAIMS ANY EXPRESS OR IMPLIED WARRANTY WITH RESPECT TO THE USE AND/OR SALE OF ST PRODUCTS INCLUDING WITHOUT LIMITATION IMPLIED WARRANTIES OF MERCHANTABILITY, FITNESS FOR A PARTICULAR PURPOSE (AND THEIR EQUIVALENTS UNDER THE LAWS OF ANY JURISDICTION), OR INFRINGEMENT OF ANY PATENT, COPYRIGHT OR OTHER INTELLECTUAL PROPERTY RIGHT.

UNLESS EXPRESSLY APPROVED IN WRITING BY AN AUTHORIZED ST REPRESENTATIVE, ST PRODUCTS ARE NOT RECOMMENDED, AUTHORIZED OR WARRANTED FOR USE IN MILITARY, AIR CRAFT, SPACE, LIFE SAVING, OR LIFE SUSTAINING APPLICATIONS, NOR IN PRODUCTS OR SYSTEMS WHERE FAILURE OR MALFUNCTION MAY RESULT IN PERSONAL INJURY, DEATH, OR SEVERE PROPERTY OR ENVIRONMENTAL DAMAGE. ST PRODUCTS WHICH ARE NOT SPECIFIED AS "AUTOMOTIVE GRADE" MAY ONLY BE USED IN AUTOMOTIVE APPLICATIONS AT USER’S OWN RISK.

Resale of ST products with provisions different from the statements and/or technical features set forth in this document shall immediately void any warranty granted by ST for the ST product or service described herein and shall not create or extend in any manner whatsoever, any liability of ST.

ST and the ST logo are trademarks or registered trademarks of ST in various countries.

Information in this document supersedes and replaces all information previously supplied.

The ST logo is a registered trademark of STMicroelectronics. All other names are the property of their respective owners.

© 2006 STMicroelectronics - All rights reserved

STMicroelectronics group of companies

Australia - Belgium - Brazil - Canada - China - Czech Republic - Finland - France - Germany - Hong Kong - India - Israel - Italy - Japan - Malaysia - Malta - Morocco - Singapore - Spain - Sweden - Switzerland - United Kingdom - United States of America

www.st.com

ENTEGRECİ

Bu belge www.entegreci.com üzerinden sunulmaktadır.

Elektronik komponent tedarikinde Entegreci

Entegreci, Eskişehir merkezli, Türkiye geneline satış yapan bir elektronik komponent mağazasıdır. Entegreler (IC), mikrodenetleyiciler, transistörler, diyotlar, pasif elemanlar, konnektörler, modüller ve geliştirme kartları tek adetten seri üretim adetlerine kadar satılır. Ürün sayfalarında güncel stok durumunu, fiyatı ve datasheet bağlantısını bulabilirsiniz.

Parça koduyla arama

Üretici parça numarasını yazın; stok ve fiyatı hemen görün.

www.entegreci.com

Ürün kategorileri

Entegreden kapasitöre tüm elektronik komponent kategorileri.

Kategorilere göz atın

Üreticiler

Aradığınız üreticinin ürünlerini tek sayfada inceleyin.

Üreticileri görün

Toplu alım ve teklif

Listede olmayan ya da yüksek adetli parçalar için teklif isteyin.

Teklif isteyin

www.entegreci.com | **destek@entegreci.com** | **0850 305 90 34**

Entegreci is an online electronic components store based in Türkiye. Search by manufacturer part number to see stock, prices and datasheets for integrated circuits, microcontrollers, transistors, passive components and connectors, or request a quote for parts that are not listed.

Bu sayfa Entegreci tarafından eklenmiştir. Belgenin önceki sayfaları asıl yayıncısına aittir ve içeriği değiştirilmemiştir; en güncel sürüm için belgenin yayıncısına başvurun.