16A, 50V, 0.047 Ohm, Logic Level, N-Channel Power MOSFETs

These are N-Channel logic level power MOSFETs manufactured using the MegaFET process. This process, which uses feature sizes approaching those of LSI integrated circuits gives optimum utilization of silicon, resulting in outstanding performance. They were designed for use with logic level (5V) driving sources in applications such as programmable controllers, automotive switching, switching regulators, switching converters, motor relay drivers and emitter switches for bipolar transistors. This performance is accomplished through a special gate oxide design which provides full rated conductance at gate biases in the 3V to 5V range, thereby facilitating true on-off power control directly from logic circuit supply voltages.

Formerly developmental type TA09871.

Ordering Information

PART NUMBER	PACKAGE	BRAND
RFD16N05L	TO-251AA	RFD16N05L
RFD16N05LSM	TO-252AA	RFD16N05LSM

NOTE: When ordering, include the entire part number. Add the suffix 9A to obtain the TO-252AA variant in tape and reel, i.e. RFD16N05LSM9A

Features

- 16A, 50V
- $r_{DS(ON)} = 0.047\Omega$
- UIS SOA Rating Curve (Single Pulse)
- Design Optimized for 5V Gate Drives
- Can be Driven Directly from CMOS, NMOS, TTL Circuits
- Compatible with Automotive Drive Requirements
- SOA is Power Dissipation Limited
- Nanosecond Switching Speeds
- Linear Transfer Characteristics
- High Input Impedance
- Majority Carrier Device
- Related Literature
  - TB334 “Guidelines for Soldering Surface Mount Components to PC Boards”

Symbol

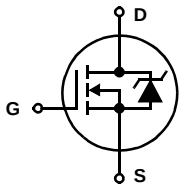

Packaging

JEDEC TO-251AA

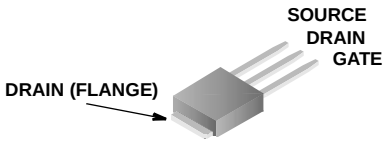

JEDEC TO-252AA

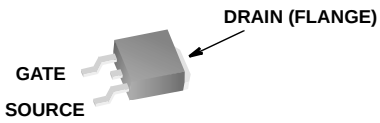

©2003 Fairchild Semiconductor Corporation

Absolute Maximum Ratings $T_C = 25^oC$, Unless Otherwise Specified

		RFD16N05L, RFD16N05LSM	UNITS
Drain to Source Voltage (Note 1)	V_{DS}	50	V
Drain to Gate Voltage (R_{GS} = 20kΩ) (Note 1)	V_{DGR}	50	V
Continuous Drain Current	I_D	16	A
Pulsed Drain Current (Note 3)	I_{DM}	45	A
Gate to Source Voltage	V_{GS}	±10	V
Maximum Power Dissipation	P_D	60	W
Derate Above 25^oC		0.48	$W/^oC$
Operating and Storage Temperature	T_J, T_{STG}	-55 to 150	^oC
Maximum Temperature for Soldering			
Leads at 0.063in (1.6mm) from Case for 10s	T_L	300	^oC
Package Body for 10s, See Techbrief 334	T_{pkg}	260	^oC

CAUTION: Stresses above those listed in "Absolute Maximum Ratings" may cause permanent damage to the device. This is a stress only rating and operation of the device at these or any other conditions above those indicated in the operational sections of this specification is not implied.

NOTE:

1. $T_J = 25^oC$ to 125^oC.

Electrical Specifications $T_C = 25^oC$, Unless Otherwise Specified

PARAMETER	SYMBOL	TEST CONDITIONS		MIN	TYP	MAX	UNITS
Drain to Source Breakdown Voltage	BV_{DSS}	I_D = 250mA, V_{GS} = 0V, Figure 10		50	-	-	V
Gate to Threshold Voltage	$V_{GS(TH)}$	V_{GS} = V_{DS}, I_D = 250mA, Figure 9		1	-	2	V
Zero Gate Voltage Drain Current	I_{DSS}	V_{DS} = 40V, V_{GS} = 0V		-	-	1	µA
			$T_C = 150^oC$	-	-	50	µA
Gate to Source Leakage Current	I_{GSS}	V_{GS} = ±10V, V_{DS} = 0V		-	-	100	nA
Drain to Source On Resistance (Note 2)	$r_{DS(ON)}$	I_D = 16A, V_{GS} = 5V		-	-	0.047	Ω
		I_D = 16A, V_{GS} = 4V		-	-	0.056	Ω
Turn-On Time	$t_{(ON)}$	V_{DD} = 25V, I_D = 8A, V_{GS} = 5V, R_{GS} = 12.5Ω Figures 15, 16		-	-	60	ns
Turn-On Delay Time	$t_{d(ON)}$			-	14	-	ns
Rise Time	t_r			-	30	-	ns
Turn-Off Delay Time	$t_{d(OFF)}$			-	42	-	ns
Fall Time	t_f			-	14	-	ns
Turn-Off Time	$t_{(OFF)}$			-	-	100	ns
Total Gate Charge	$Q_{g(TOT)}$	V_{GS} = 0V to 10V	V_{DD} = 40V, I_D = 16A, R_L = 2.5Ω Figures 17, 18	-	-	80	nC
Gate Charge at 5V	$Q_{g(5)}$	V_{GS} = 0V to 5V		-	-	45	nC
Threshold Gate Charge	$Q_{g(TH)}$	V_{GS} = 0V to 1V		-	-	3	nC
Thermal Resistance Junction to Case	$R_{\theta JC}$			-	-	2.083	$^oC/W$
Thermal Resistance Junction to Ambient	$R_{\theta JA}$			-	-	100	$^oC/W$

Source to Drain Diode Specifications

PARAMETER	SYMBOL	TEST CONDITIONS	MIN	TYP	MAX	UNITS
Source to Drain Diode Voltage	V_{SD}	I_{SD} = 16A	-	-	1.5	V
Diode Reverse Recovery Time	t_{rr}	I_{SD} = 16A, dI_{SD}/dt = 100A/µs	-	-	125	ns

NOTES:

2. Pulse Test: Pulse Width ≤300ms, Duty Cycle ≤2%.
3. Repetitive Rating: Pulse Width limited by max junction temperature.

©2003 Fairchild Semiconductor Corporation

Typical Performance Curves Unless Otherwise Specified

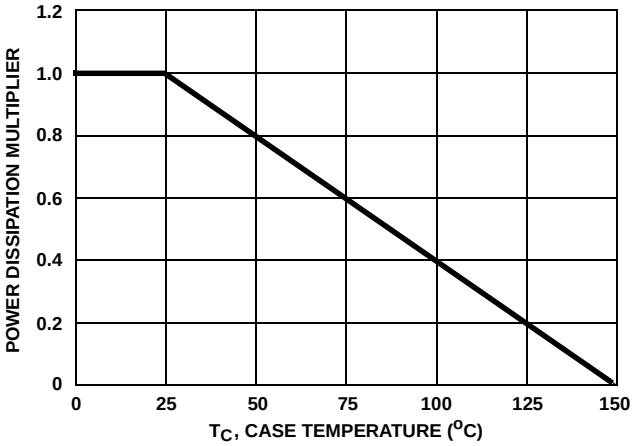

FIGURE 1. NORMALIZED POWER DISSIPATION vs CASE TEMPERATURE

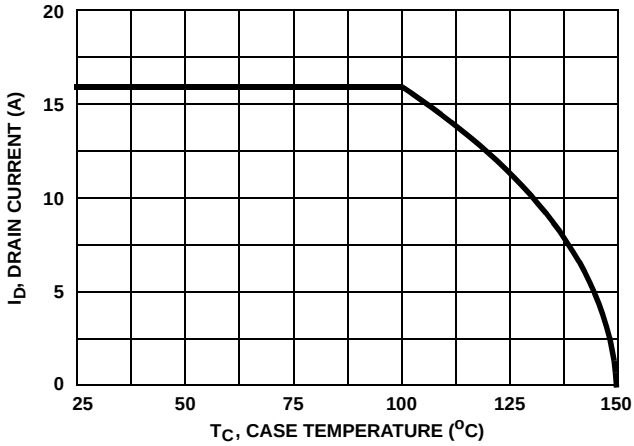

FIGURE 2. MAXIMUM CONTINUOUS DRAIN CURRENT vs CASE TEMPERATURE

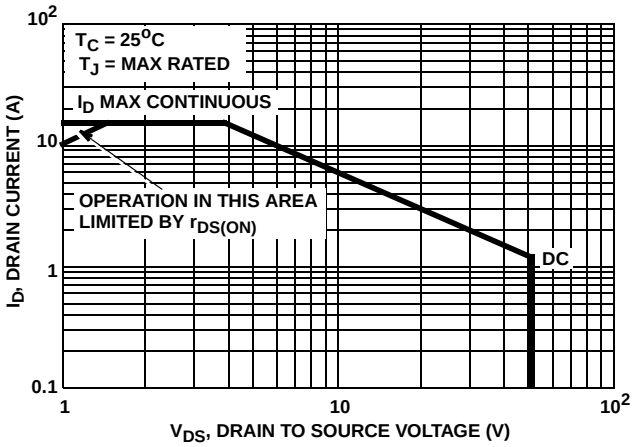

FIGURE 3. FORWARD BIAS SAFE OPERATING AREA

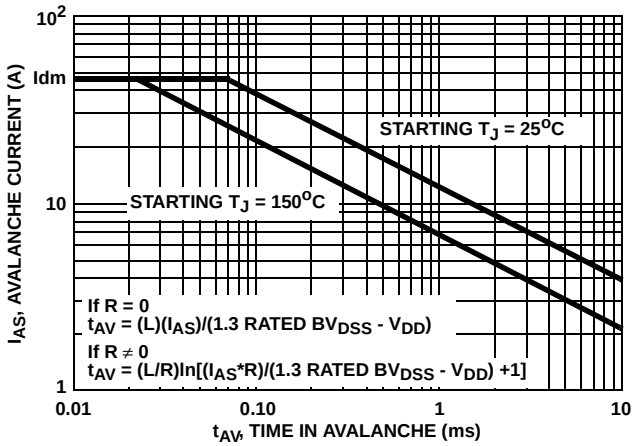

FIGURE 4. UNCLAMPED INDUCTIVE SWITCHING SOA (SINGLE PULSE UIS SOA)

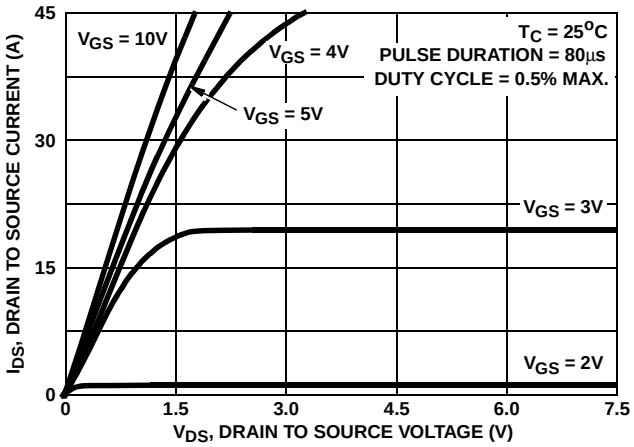

FIGURE 5. SATURATION CHARACTERISTICS

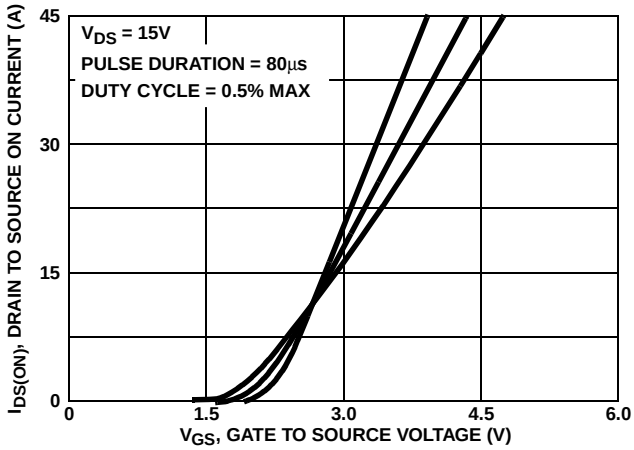

FIGURE 6. TRANSFER CHARACTERISTICS

©2003 Fairchild Semiconductor Corporation

Typical Performance Curves Unless Otherwise Specified (Continued)

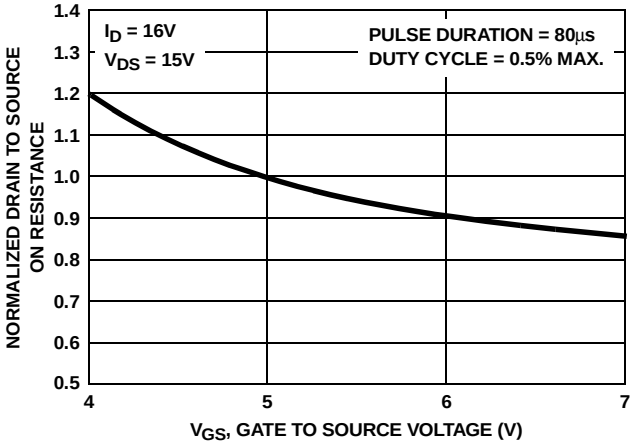

FIGURE 7. DRAIN TO SOURCE ON RESISTANCE vs GATE VOLTAGE AND DRAIN CURRENT

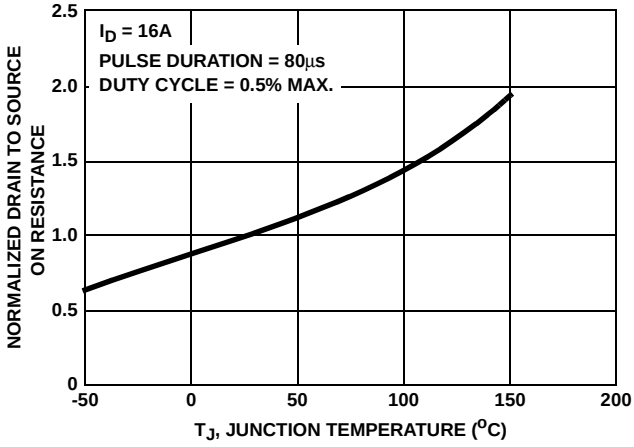

FIGURE 8. NORMALIZED DRAIN TO SOURCE ON RESISTANCE vs JUNCTION TEMPERATURE

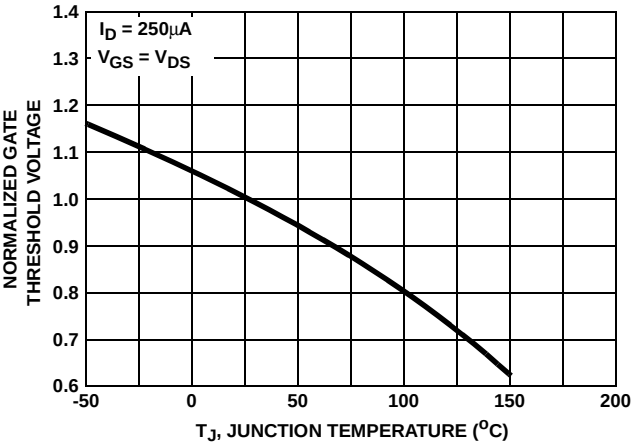

FIGURE 9. NORMALIZED GATE THRESHOLD vs JUNCTION TEMPERATURE

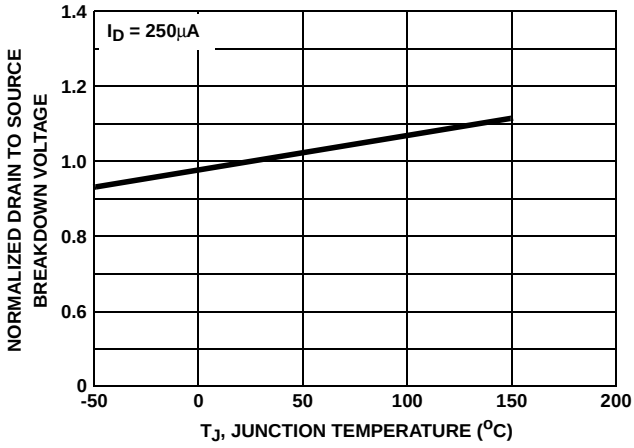

FIGURE 10. NORMALIZED DRAIN TO SOURCE BREAKDOWN VOLTAGE vs JUNCTION TEMPERATURE

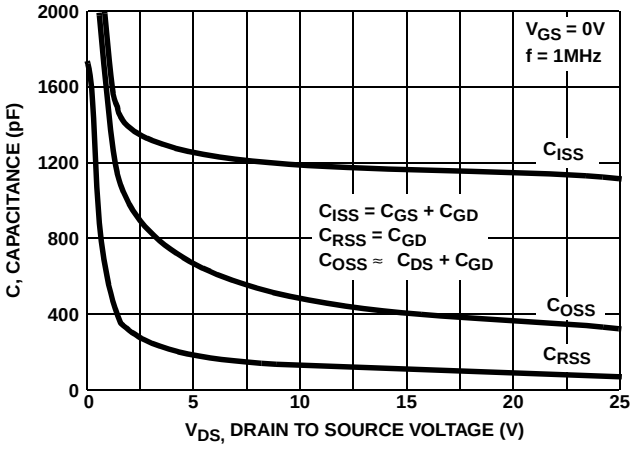

FIGURE 11. CAPACITANCE vs DRAIN TO SOURCE VOLTAGE

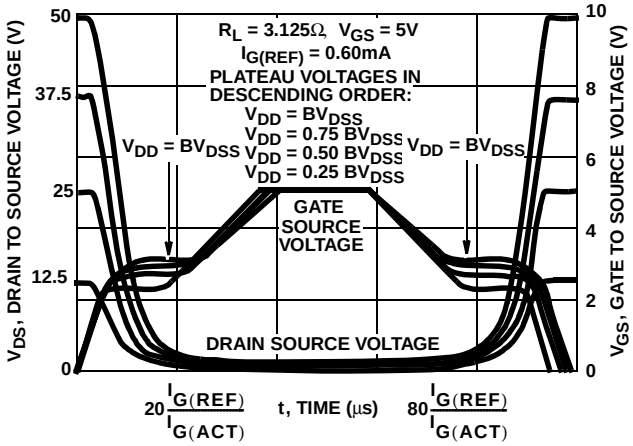

FIGURE 12. NORMALIZED SWITCHING WAVEFORMS FOR CONSTANT GATE CURRENT

©2003 Fairchild Semiconductor Corporation

Test Circuits and Waveforms

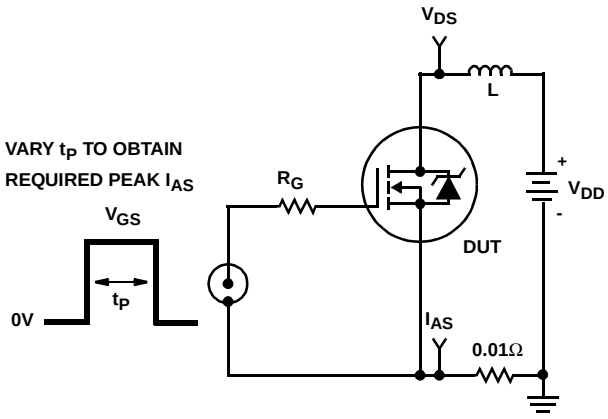

FIGURE 13. UNCLAMPED ENERGY TEST CIRCUIT

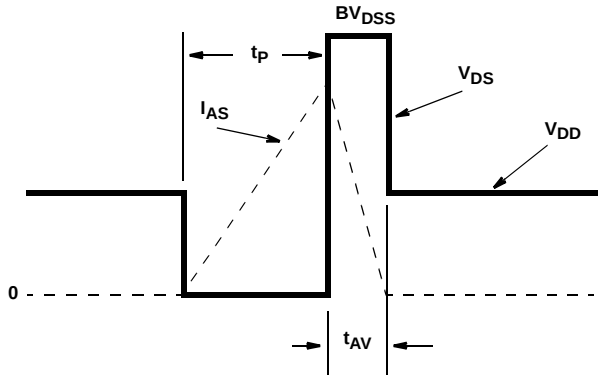

FIGURE 14. UNCLAMPED ENERGY WAVEFORMS

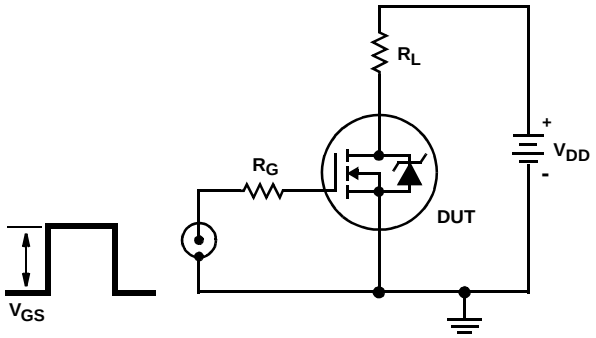

FIGURE 15. SWITCHING TIME TEST CIRCUIT

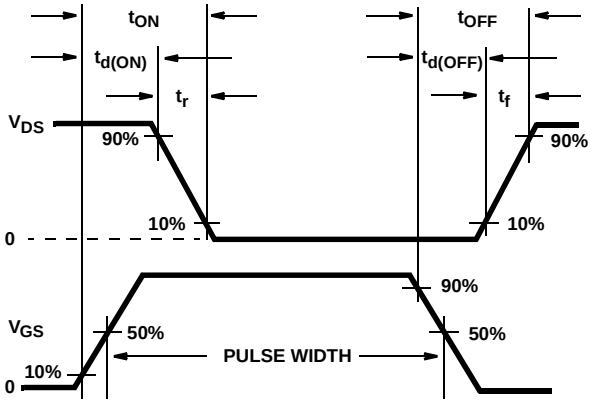

FIGURE 16. RESISTIVE SWITCHING WAVEFORMS

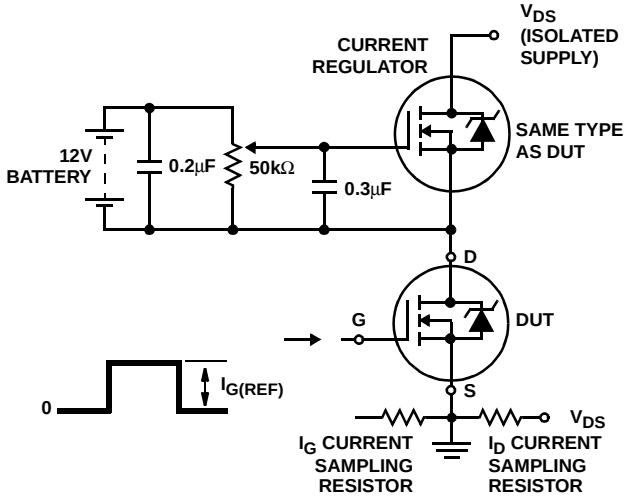

FIGURE 17. GATE CHARGE TEST CIRCUIT

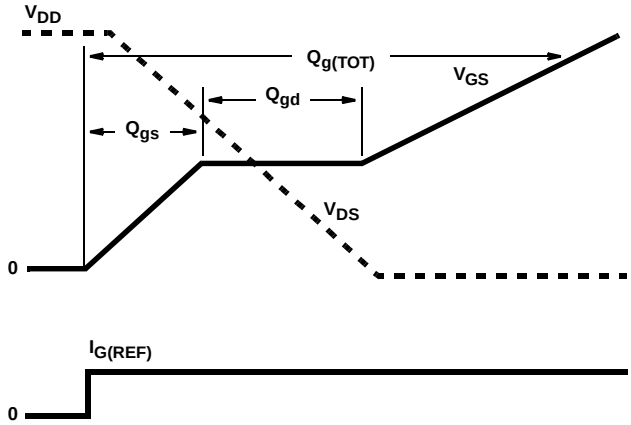

FIGURE 18. GATE CHARGE WAVEFORMS

©2003 Fairchild Semiconductor Corporation

PSPICE Electrical Model

.SUBCKT RFD16N05L 2 1 3 ; REV 4/8/92

Ca 12 8 3.33e-9
Cb 15 14 3.11e-9
Cin 6 8 1.21e-9

Dbody 7 5 DBDMOD
Dbreak 5 11 DBKMOD
Dplcap 10 5 DPLCAPMOD

Ebreak 11 7 17 18 70.9
Eds 14 8 5 8 1
Egs 13 8 6 8 1
Esg 6 10 6 8 1
Evto 20 6 18 8 1

IT 8 17 1

Lgate 1 9 1.38e-9
Ldrain 2 5 1.0e-12
Lsource 3 7 1.0e-9

Mos1 16 6 8 8 MOSMOD M=0.99
Mos2 16 21 8 8 MOSMOD M=0.01

Rin 6 8 1e9
Rbreak 17 18 RBKMOD 1
Rdrain 5 16 RDSMOD 27.38e-3
Rgate 9 20 2.98
Rsource 8 7 RDSMOD 0.614e-3
Rvto 18 19 RVTOMOD 1

S1a 6 12 13 8 S1AMOD
S1b 13 12 13 8 S1BMOD
S2a 6 15 14 13 S2AMOD
S2b 13 15 14 13 S2BMOD

Vbat 8 19 DC 1
Vto 21 6 0.448

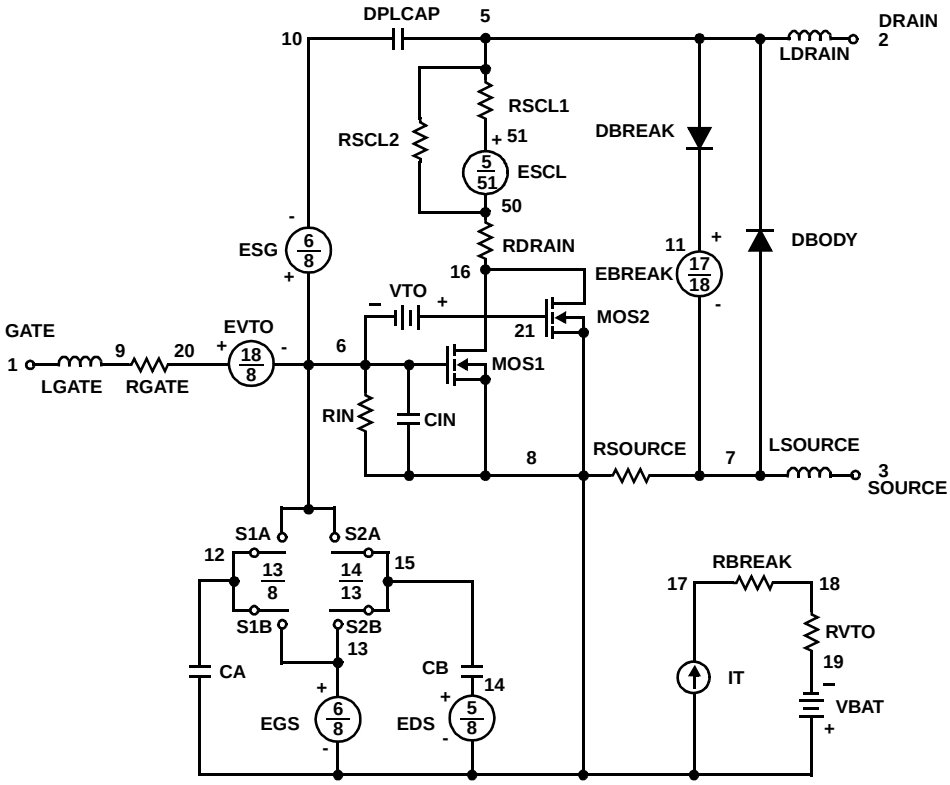

.MODEL DBDMOD D (IS=1.34e-13 RS=1.21e-2 TRS1=1.64e-3 TRS2=2.59e-6
+CJO=1.13e-9 TT=4.14e-8)
.MODEL DBKMOD D (RS=8.82e-2 TRS1=-2.01e-3 TRS2=7.32e-10)
.MODEL DPLCAPMOD D (CJO=0.522e-9 IS=1e-30 N=10)
.MODEL MOSMOD NMOS (VTO=2.054 KP=24.73 IS=1e-30 N=10 TOX=1 L=1u W=1u)
.MODEL RBKMOD RES (TC1=1.01e-3 TC2=5.21e-8)
.MODEL RDSMOD RES (TC1=3.66e-3 TC2=1.46e-5)
.MODEL RVTOMOD RES (TC1=-1.81e-3 TC2=1.41e-6)
.MODEL S1AMOD VSWITCH(RON=1e-5 ROFF=0.1 VON=-4.25 VOFF=-2.25)
.MODEL S1BMOD VSWITCH(RON=1e-5 ROFF=0.1 VON=-2.25 VOFF=-4.25)
.MODEL S2AMOD VSWITCH(RON=1e-5 ROFF=0.1 VON=-0.65 VOFF=4.35)
.MODEL S2BMOD VSWITCH(RON=1e-5 ROFF=0.1 VON=4.35 VOFF=-0.65)

.ENDS

NOTE: For further discussion of the PSPICE model, consult **A New PSPICE Sub-Circuit for the Power MOSFET Featuring Global Temperature Options**; written by William J. Hepp and C. Frank Wheatley.

©2003 Fairchild Semiconductor Corporation

TRADEMARKS

The following are registered and unregistered trademarks Fairchild Semiconductor owns or is authorized to use and is not intended to be an exhaustive list of all such trademarks.

ACEx™	FACT Quiet Series™	LittleFET™	Power247™	SuperSOT™-3
ActiveArray™	FAST®	MICROCOUPLER™	PowerTrench®	SuperSOT™-6
Bottomless™	FASTr™	MicroFET™	QFET®	SuperSOT™-8
CoolFET™	FRFET™	MicroPak™	QS™	SyncFET™
CROSSVOLT™	GlobalOptoisolator™	MICROWIRE™	QT Optoelectronics™	TinyLogic®
DOME™	GTO™	MSX™	Quiet Series™	TINYOPTO™
EcoSPARK™	HiSeC™	MSXPro™	RapidConfigure™	TruTranslation™
E^2CMOS^{TM}	I^2C™	OCX™	RapidConnect™	UHC™
EnSigna™	ImpliedDisconnect™	OCXPro™	SILENT SWITCHER®	UltraFET®
FACT™	ISOPLANAR™	OPTOLOGIC®	SMART START™	VCX™
Across the board. Around the world.™		OPTOPLANAR™	SPM™	
The Power Franchise™		PACMAN™	Stealth™	
Programmable Active Droop™		POP™	SuperFET™	

DISCLAIMER

FAIRCHILD SEMICONDUCTOR RESERVES THE RIGHT TO MAKE CHANGES WITHOUT FURTHER NOTICE TO ANY PRODUCTS HEREIN TO IMPROVE RELIABILITY, FUNCTION OR DESIGN. FAIRCHILD DOES NOT ASSUME ANY LIABILITY ARISING OUT OF THE APPLICATION OR USE OF ANY PRODUCT OR CIRCUIT DESCRIBED HEREIN; NEITHER DOES IT CONVEY ANY LICENSE UNDER ITS PATENT RIGHTS, NOR THE RIGHTS OF OTHERS.

LIFE SUPPORT POLICY

FAIRCHILD'S PRODUCTS ARE NOT AUTHORIZED FOR USE AS CRITICAL COMPONENTS IN LIFE SUPPORT DEVICES OR SYSTEMS WITHOUT THE EXPRESS WRITTEN APPROVAL OF FAIRCHILD SEMICONDUCTOR CORPORATION.

As used herein:

1. Life support devices or systems are devices or systems which, (a) are intended for surgical implant into the body, or (b) support or sustain life, or (c) whose failure to perform when properly used in accordance with instructions for use provided in the labeling, can be reasonably expected to result in significant injury to the user.

2. A critical component is any component of a life support device or system whose failure to perform can be reasonably expected to cause the failure of the life support device or system, or to affect its safety or effectiveness.

PRODUCT STATUS DEFINITIONS

Definition of Terms

Datasheet Identification	Product Status	Definition
Advance Information	Formative or In Design	This datasheet contains the design specifications for product development. Specifications may change in any manner without notice.
Preliminary	First Production	This datasheet contains preliminary data, and supplementary data will be published at a later date. Fairchild Semiconductor reserves the right to make changes at any time without notice in order to improve design.
No Identification Needed	Full Production	This datasheet contains final specifications. Fairchild Semiconductor reserves the right to make changes at any time without notice in order to improve design.
Obsolete	Not In Production	This datasheet contains specifications on a product that has been discontinued by Fairchild semiconductor. The datasheet is printed for reference information only.

ENTEGRECİ

Bu belge www.entegreci.com üzerinden sunulmaktadır.

Elektronik komponent tedarikinde Entegreci

Entegreci, Eskişehir merkezli, Türkiye geneline satış yapan bir elektronik komponent mağazasıdır. Entegreler (IC), mikrodenetleyiciler, transistörler, diyotlar, pasif elemanlar, konnektörler, modüller ve geliştirme kartları tek adetten seri üretim adetlerine kadar satılır. Ürün sayfalarında güncel stok durumunu, fiyatı ve datasheet bağlantısını bulabilirsiniz.

Parça koduyla arama

Üretici parça numarasını yazın; stok ve fiyatı hemen görün.

www.entegreci.com

Ürün kategorileri

Entegreden kapasitöre tüm elektronik komponent kategorileri.

Kategorilere göz atın

Üreticiler

Aradığınız üreticinin ürünlerini tek sayfada inceleyin.

Üreticileri görün

Toplu alım ve teklif

Listede olmayan ya da yüksek adetli parçalar için teklif isteyin.

Teklif isteyin

www.entegreci.com | **destek@entegreci.com** | **0850 305 90 34**

Entegreci is an online electronic components store based in Türkiye. Search by manufacturer part number to see stock, prices and datasheets for integrated circuits, microcontrollers, transistors, passive components and connectors, or request a quote for parts that are not listed.

Bu sayfa Entegreci tarafından eklenmiştir. Belgenin önceki sayfaları asıl yayıncısına aittir ve içeriği değiştirilmemiştir; en güncel sürüm için belgenin yayıncısına başvurun.