Distributed by:

JAMECO® ELECTRONICS

www.Jameco.com ✦ 1-800-831-4242

The content and copyrights of the attached material are the property of its owner.

Jameco Part Number 905088

BURR - BROWN®

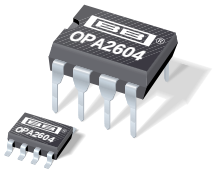

OPA2604

www.burr-brown.com/databook/OPA2604.html

Dual FET-Input, Low Distortion OPERATIONAL AMPLIFIER

FEATURES

- LOW DISTORTION: 0.0003% at 1kHz
- LOW NOISE: 10nV/√Hz
- HIGH SLEW RATE: 25V/μs
- WIDE GAIN-BANDWIDTH: 20MHz
- UNITY-GAIN STABLE
- WIDE SUPPLY RANGE: V_S = ±4.5 to ±24V
- DRIVES 600Ω LOADS

APPLICATIONS

- PROFESSIONAL AUDIO EQUIPMENT
- PCM DAC I/V CONVERTER
- SPECTRAL ANALYSIS EQUIPMENT
- ACTIVE FILTERS
- TRANSDUCER AMPLIFIER
- DATA ACQUISITION

DESCRIPTION

The OPA2604 is a dual, FET-input operational amplifier designed for enhanced AC performance. Very low distortion, low noise and wide bandwidth provide superior performance in high quality audio and other applications requiring excellent dynamic performance.

New circuit techniques and special laser trimming of dynamic circuit performance yield very low harmonic distortion. The result is an op amp with exceptional sound quality. The low-noise FET input of the OPA2604 provides wide dynamic range, even with high source impedance. Offset voltage is laser-trimmed to minimize the need for interstage coupling capacitors.

The OPA2604 is available in 8-pin plastic mini-DIP and SO-8 surface-mount packages, specified for the –25°C to +85°C temperature range.

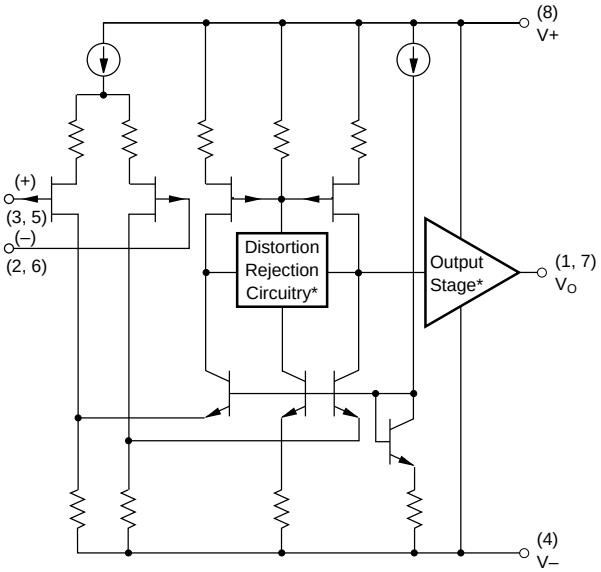

* Patents Granted:
#5053718, 5019789

International Airport Industrial Park • Mailing Address: PO Box 11400, Tucson, AZ 85734 • Street Address: 6730 S. Tucson Blvd., Tucson, AZ 85706 • Tel: (520) 746-1111 • Twx: 910-952-1111
Internet: http://www.burr-brown.com/ • FAXLine: (800) 548-6133 (US/Canada Only) • Cable: BBRCORP • Telex: 066-6491 • FAX: (520) 889-1510 • Immediate Product Info: (800) 548-6132

© 1991 Burr-Brown Corporation
PDS-1069E
Printed in U.S.A. October, 1997

SBOS006

SPECIFICATIONS

ELECTRICAL

At T_A = +25°C, V_S = ±15V, unless otherwise noted.

PARAMETER	CONDITION	OPA2604AP, AU			UNITS
		MIN	TYP	MAX	
OFFSET VOLTAGE					
Input Offset Voltage			±1	±5	mV
Average Drift			±8		µV/°C
Power Supply Rejection	V_S = ±5 to ±24V	70	80		dB
INPUT BIAS CURRENT(1)					
Input Bias Current	V_{CM} = 0V		100		pA
Input Offset Current	V_{CM} = 0V		±4		pA
NOISE					
Input Voltage Noise					
Noise Density: f = 10Hz			25		nV/√Hz
f = 100Hz			15		nV/√Hz
f = 1kHz			11		nV/√Hz
f = 10kHz			10		nV/√Hz
Voltage Noise, BW = 20Hz to 20kHz			1.5		µVp-p
Input Bias Current Noise					
Current Noise Density, f = 0.1Hz to 20kHz			6		fA/√Hz
INPUT VOLTAGE RANGE					
Common-Mode Input Range		±12	±13		V
Common-Mode Rejection	V_{CM} = ±12V	80	100		dB
INPUT IMPEDANCE					
Differential			10^{12} || 8		Ω || pF
Common-Mode			10^{12} || 10		Ω || pF
OPEN-LOOP GAIN					
Open-Loop Voltage Gain	V_O = ±10V, R_L = 1kΩ	80	100		dB
FREQUENCY RESPONSE					
Gain-Bandwidth Product	G = 100		20		MHz
Slew Rate	20Vp-p, R_L = 1kΩ	15	25		V/µs
Settling Time: 0.01%	G = –1, 10V Step		1.5		µs
0.1%			1		µs
Total Harmonic Distortion + Noise (THD+N)	G = 1, f = 1kHz		0.0003		%
	V_O = 3.5Vrms, R_L = 1kΩ				
Channel Separation	f = 1kHz, R_L = 1kΩ		142		dB
OUTPUT					
Voltage Output	R_L = 600Ω	±11	±12		V
Current Output	V_O = ±12V		±35		mA
Short Circuit Current			±40		mA
Output Resistance, Open-Loop			25		Ω
POWER SUPPLY					
Specified Operating Voltage			±15		V
Operating Voltage Range		±4.5		±24	V
Current, Total Both Amplifiers	I_O = 0		±10.5	±12	mA
TEMPERATURE RANGE					
Specification		–25		+85	°C
Storage		–40		+125	°C
Thermal Resistance(2), θ_{JA}			90		°C/W

NOTES: (1) Typical performance, measured fully warmed-up. (2) Soldered to circuit board—see text.

The information provided herein is believed to be reliable; however, BURR-BROWN assumes no responsibility for inaccuracies or omissions. BURR-BROWN assumes no responsibility for the use of this information, and all use of such information shall be entirely at the user's own risk. Prices and specifications are subject to change without notice. No patent rights or licenses to any of the circuits described herein are implied or granted to any third party. BURR-BROWN does not authorize or warrant any BURR-BROWN product for use in life support devices and/or systems.

PIN CONFIGURATION

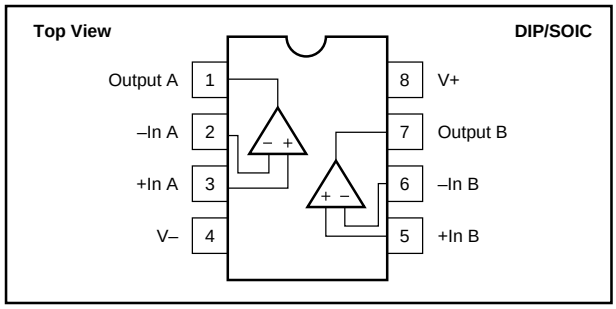

ELECTROSTATIC DISCHARGE SENSITIVITY

Any integrated circuit can be damaged by ESD. Burr-Brown recommends that all integrated circuits be handled with appropriate precautions. Failure to observe proper handling and installation procedures can cause damage.

ESD damage can range from subtle performance degradation to complete device failure. Precision integrated circuits may be more susceptible to damage because very small parametric changes could cause the device not to meet published specifications.

ABSOLUTE MAXIMUM RATINGS(1)

Power Supply Voltage	±25V
Input Voltage	(V–)–1V to (V+)+1V
Output Short Circuit to Ground	Continuous
Operating Temperature	–40°C to +100°C
Storage Temperature	–40°C to +125°C
Junction Temperature	+150°C
Lead Temperature (soldering, 10s) AP	+300°C
Lead Temperature (soldering, 3s) AU	+260°C

NOTE: (1) Stresses above these ratings may cause permanent damage.

ORDERING INFORMATION

PRODUCT	PACKAGE	TEMP. RANGE
OPA2604AP	8-Pin Plastic DIP	–25°C to +85°C
OPA2604AU	SO-8 Surface-Mount	–25°C to +85°C

PACKAGING INFORMATION

PRODUCT	PACKAGE	PACKAGE DRAWING NUMBER(1)
OPA2604AP	8-Pin Plastic DIP	006
OPA2604AU	SO-8 Surface-Mount	182

NOTE: (1) For detailed drawing and dimension table, please see end of data sheet, or Appendix C of Burr-Brown IC Data Book.

TYPICAL PERFORMANCE CURVES

At T_A = +25°C, V_S = ±15V, unless otherwise noted.

TOTAL HARMONIC DISTORTION + NOISE vs FREQUENCY

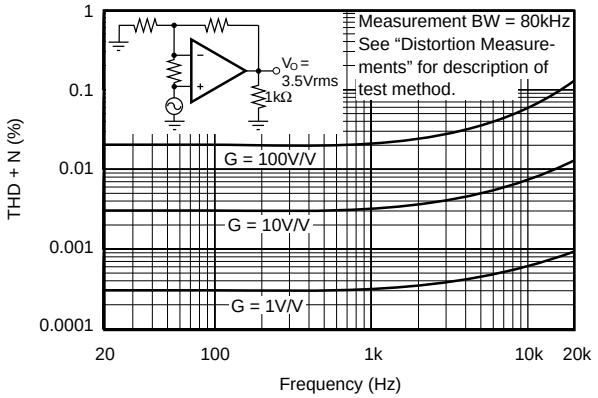

TOTAL HARMONIC DISTORTION + NOISE vs OUTPUT VOLTAGE

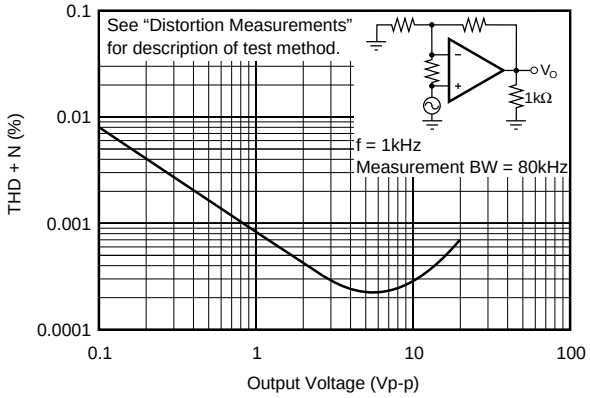

OPEN-LOOP GAIN/PHASE vs FREQUENCY

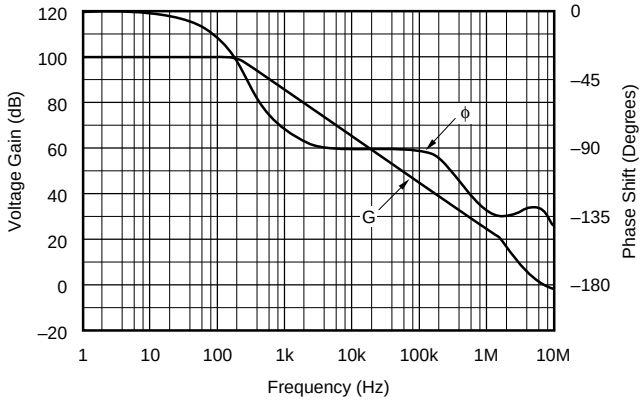

INPUT VOLTAGE AND CURRENT NOISE SPECTRAL DENSITY vs FREQUENCY

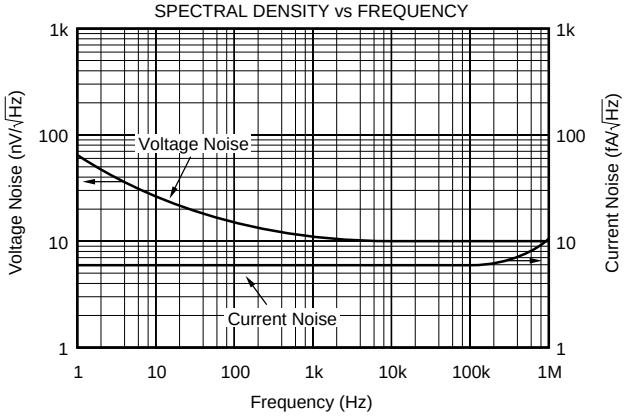

INPUT BIAS AND INPUT OFFSET CURRENT vs TEMPERATURE

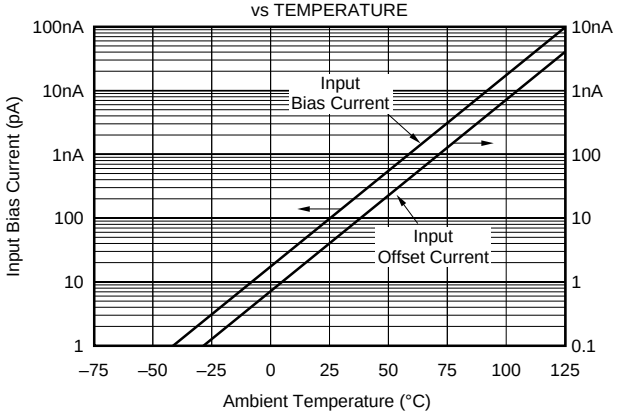

INPUT BIAS AND INPUT OFFSET CURRENT vs INPUT COMMON-MODE VOLTAGE

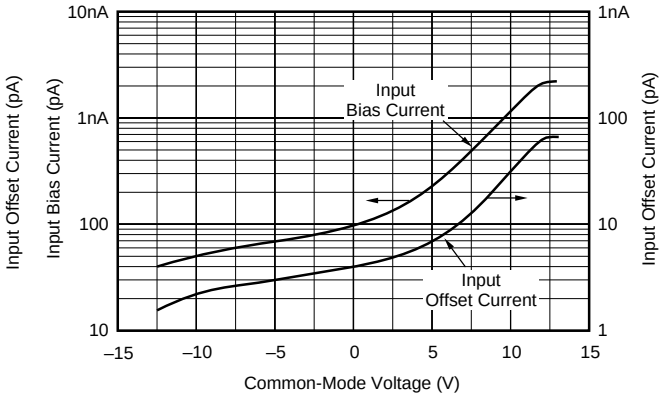

TYPICAL PERFORMANCE CURVES (CONT)

At T_A = +25°C, V_S = ±15V, unless otherwise noted.

INPUT BIAS CURRENT
vs TIME FROM POWER TURN-ON

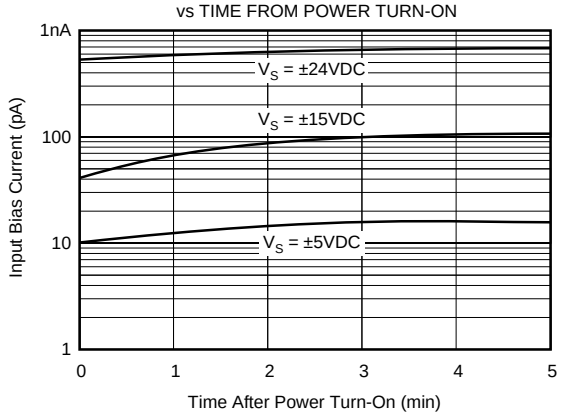

COMMON-MODE REJECTION
vs COMMON-MODE VOLTAGE

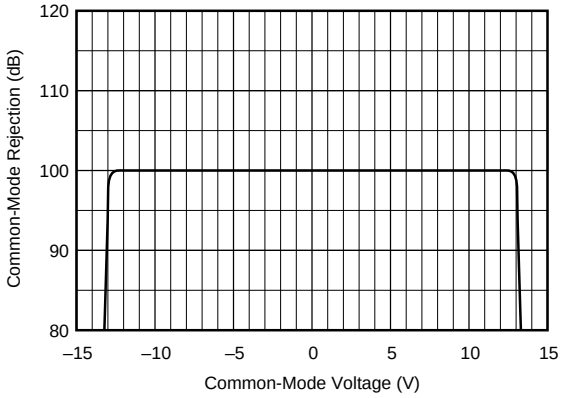

POWER SUPPLY AND COMMON-MODE
REJECTION vs FREQUENCY

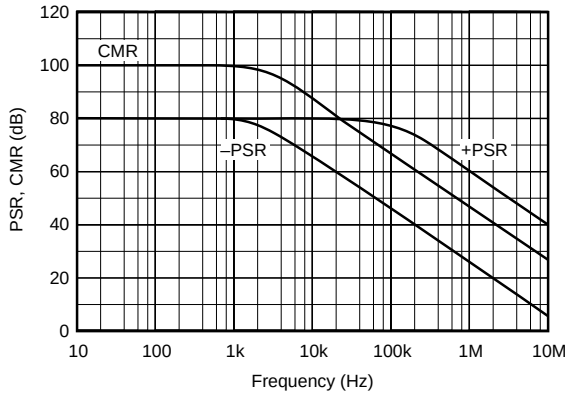

A_{OL}, PSR, AND CMR vs SUPPLY VOLTAGE

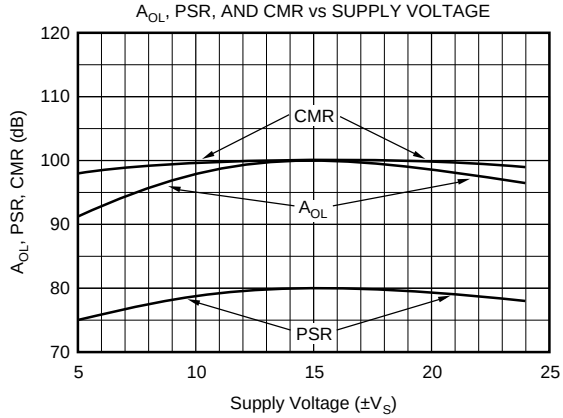

GAIN-BANDWIDTH AND SLEW RATE
vs SUPPLY VOLTAGE

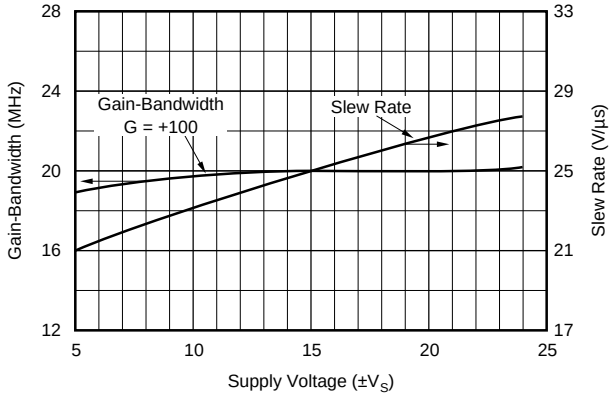

GAIN-BANDWIDTH AND SLEW RATE
vs TEMPERATURE

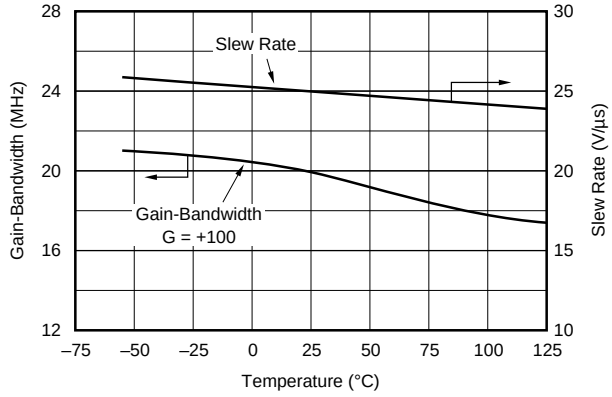

TYPICAL PERFORMANCE CURVES (CONT)

At T_A = +25°C, V_S = ±15V, unless otherwise noted.

SETTLING TIME vs CLOSED-LOOP GAIN

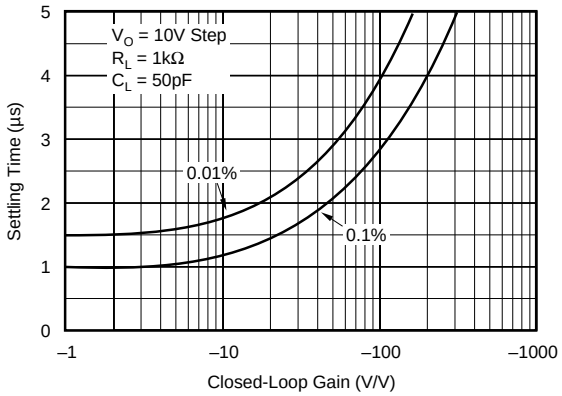

CHANNEL SEPARATION vs FREQUENCY

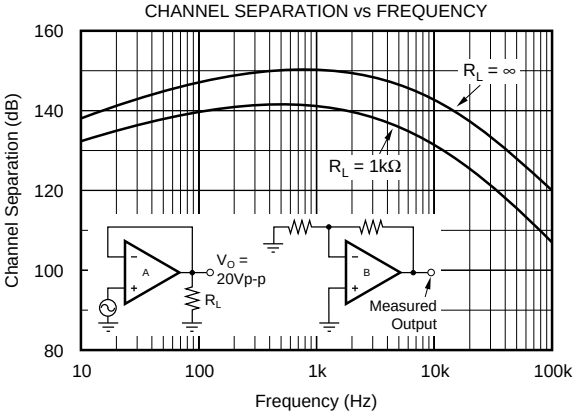

MAXIMUM OUTPUT VOLTAGE SWING vs FREQUENCY

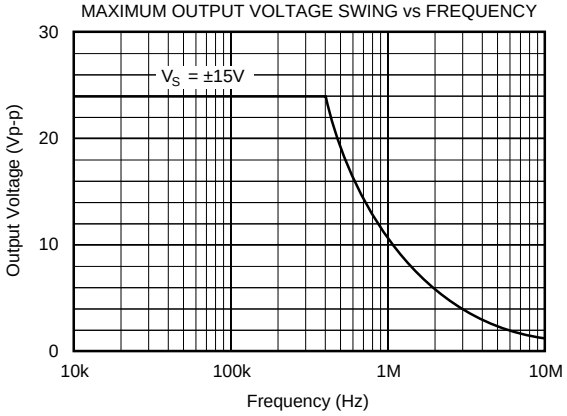

SUPPLY CURRENT vs TEMPERATURE

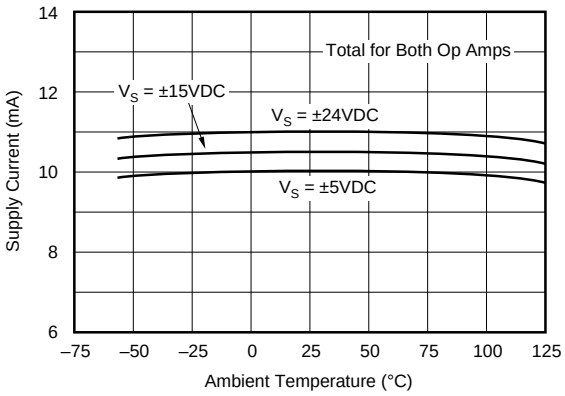

LARGE-SIGNAL TRANSIENT RESPONSE

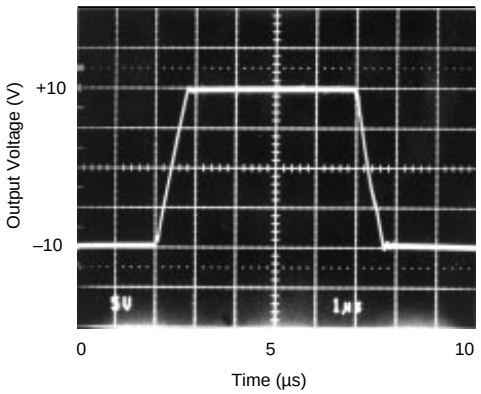

SMALL-SIGNAL TRANSIENT RESPONSE

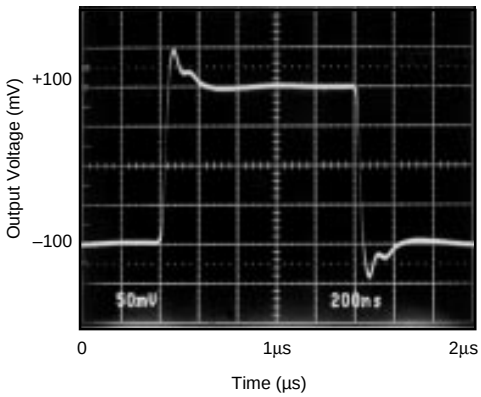

TYPICAL PERFORMANCE CURVES (CONT)

At T_A = +25°C, V_S = ±15V, unless otherwise noted.

SHORT-CIRCUIT CURRENT vs TEMPERATURE

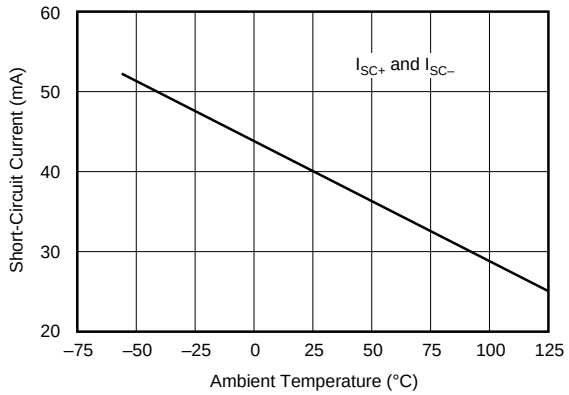

POWER DISSIPATION vs SUPPLY VOLTAGE

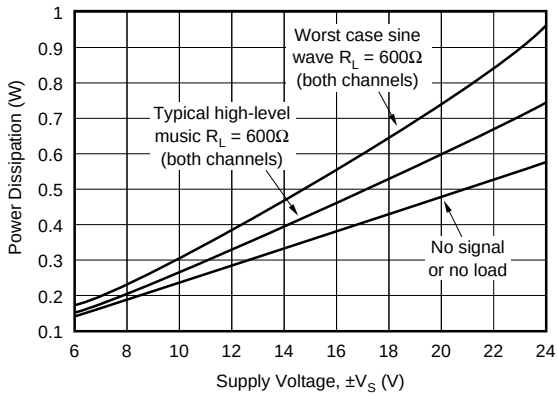

MAXIMUM POWER DISSIPATION vs TEMPERATURE

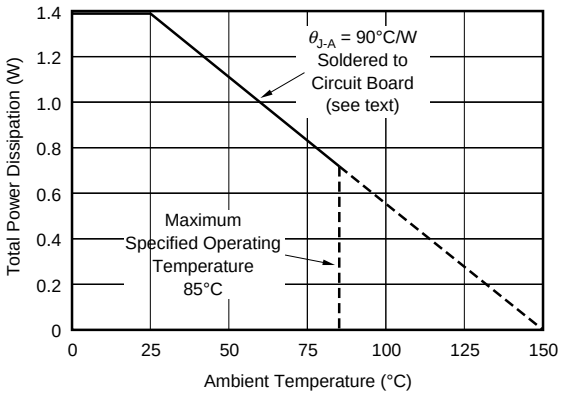

APPLICATIONS INFORMATION

The OPA2604 is unity-gain stable, making it easy to use in a wide range of circuitry. Applications with noisy or high impedance power supply lines may require decoupling capacitors close to the device pins. In most cases 1µF tantalum capacitors are adequate.

DISTORTION MEASUREMENTS

The distortion produced by the OPA2604 is below the measurement limit of virtually all commercially available equipment. A special test circuit, however, can be used to extend the measurement capabilities.

Op amp distortion can be considered an internal error source which can be referred to the input. Figure 1 shows a circuit which causes the op amp distortion to be 101 times greater than normally produced by the op amp. The addition of R_3 to the otherwise standard non-inverting amplifier configuration alters the feedback factor or noise gain of the circuit. The closed-loop gain is unchanged, but the feedback available for error correction is reduced by a factor of 101. This extends the measurement limit, including the effects of the signal-source purity, by a factor of 101. Note that the input signal and load applied to the op amp are the same as with conventional feedback without R_3.

Validity of this technique can be verified by duplicating measurements at high gain and/or high frequency where the distortion is within the measurement capability of the test equipment. Measurements for this data sheet were made with the Audio Precision System One which greatly simplifies such repetitive measurements. The measurement technique can, however, be performed with manual distortion measurement instruments.

CAPACITIVE LOADS

The dynamic characteristics of the OPA2604 have been optimized for commonly encountered gains, loads and operating conditions. The combination of low closed-loop gain and capacitive load will decrease the phase margin and may lead to gain peaking or oscillations. Load capacitance reacts with the op amp's open-loop output resistance to form an additional pole in the feedback loop. Figure 2 shows various circuits which preserve phase margin with capacitive load. Request Application Bulletin AB-028 for details of analysis techniques and applications circuits.

For the unity-gain buffer, Figure 2a, stability is preserved by adding a phase-lead network, R_C and C_C. Voltage drop across R_C will reduce output voltage swing with heavy loads. An alternate circuit, Figure 2b, does not limit the output with low load impedance. It provides a small amount of positive feedback to reduce the net feedback factor. Input impedance of this circuit falls at high frequency as op amp gain rolloff reduces the bootstrap action on the compensation network.

Figures 2c and 2d show compensation techniques for noninverting amplifiers. Like the follower circuits, the circuit in Figure 2d eliminates voltage drop due to load current, but at the penalty of somewhat reduced input impedance at high frequency.

Figures 2e and 2f show input lead compensation networks for inverting and difference amplifier configurations.

NOISE PERFORMANCE

Op amp noise is described by two parameters—noise voltage and noise current. The voltage noise determines the noise performance with low source impedance. Low noise bipolar-input op amps such as the OPA27 and OPA37 provide very low voltage noise. But if source impedance is greater than a few thousand ohms, the current noise of bipolar-input op amps react with the source impedance and will dominate. At a few thousand ohms source impedance and above, the OPA2604 will generally provide lower noise.

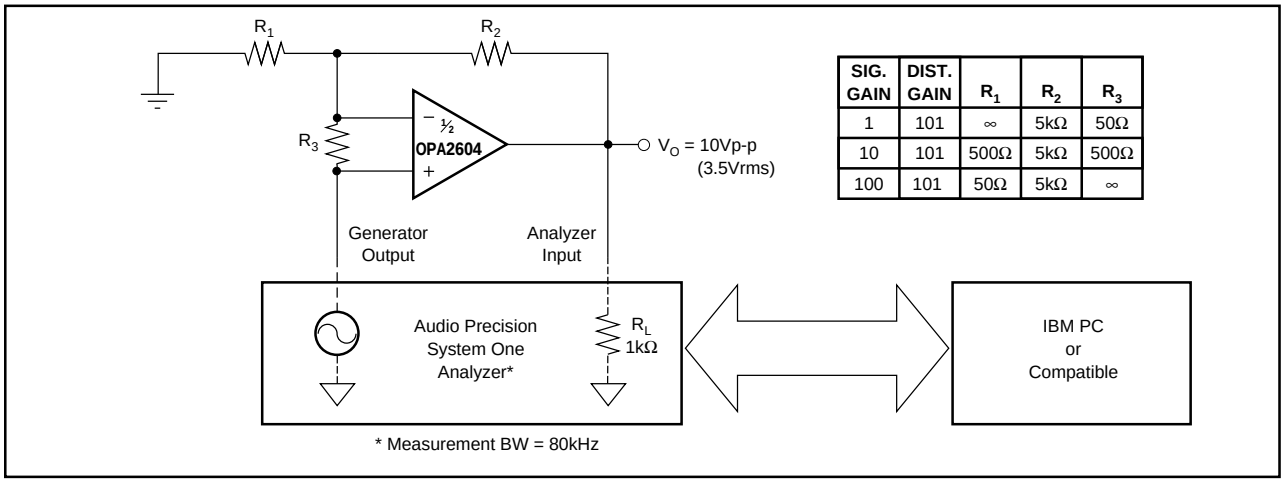

SIG. GAIN	DIST. GAIN	R_1	R_2	R_3
1	101	∞	5kΩ	50Ω
10	101	500Ω	5kΩ	500Ω
100	101	50Ω	5kΩ	∞

FIGURE 1. Distortion Test Circuit.

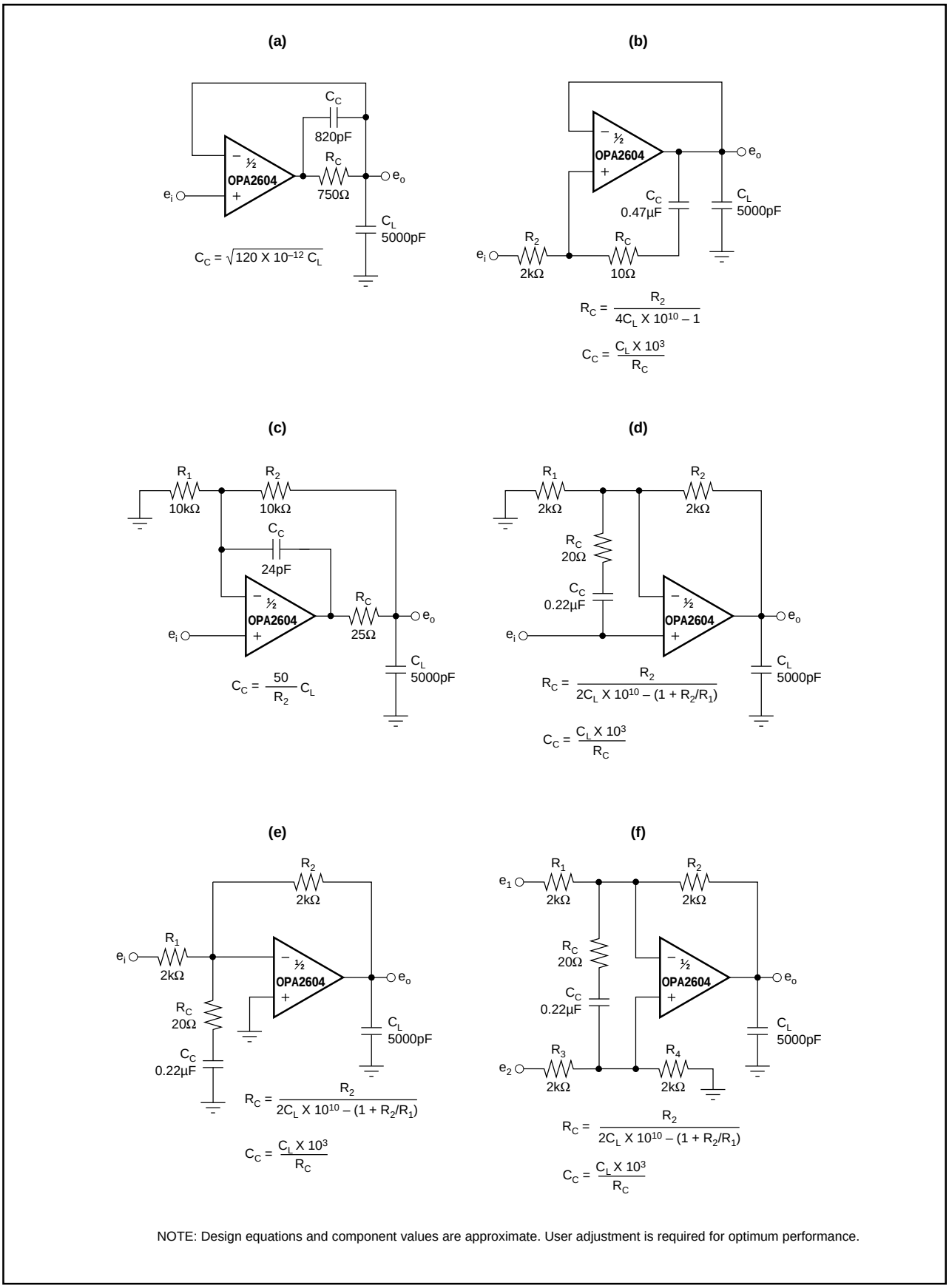

NOTE: Design equations and component values are approximate. User adjustment is required for optimum performance.

FIGURE 2. Driving Large Capacitive Loads.

POWER DISSIPATION

The OPA2604 is capable of driving 600Ω loads with power supply voltages up to ±24V. Internal power dissipation is increased when operating at high power supply voltage. The typical performance curve, Power Dissipation vs Power Supply Voltage, shows quiescent dissipation (no signal or no load) as well as dissipation with a worst case continuous sine wave. Continuous high-level music signals typically produce dissipation significantly less than worst case sine waves.

Copper leadframe construction used in the OPA2604 improves heat dissipation compared to conventional plastic packages. To achieve best heat dissipation, solder the device directly to the circuit board and use wide circuit board traces.

OUTPUT CURRENT LIMIT

Output current is limited by internal circuitry to approximately ±40mA at 25°C. The limit current decreases with increasing temperature as shown in the typical curves.

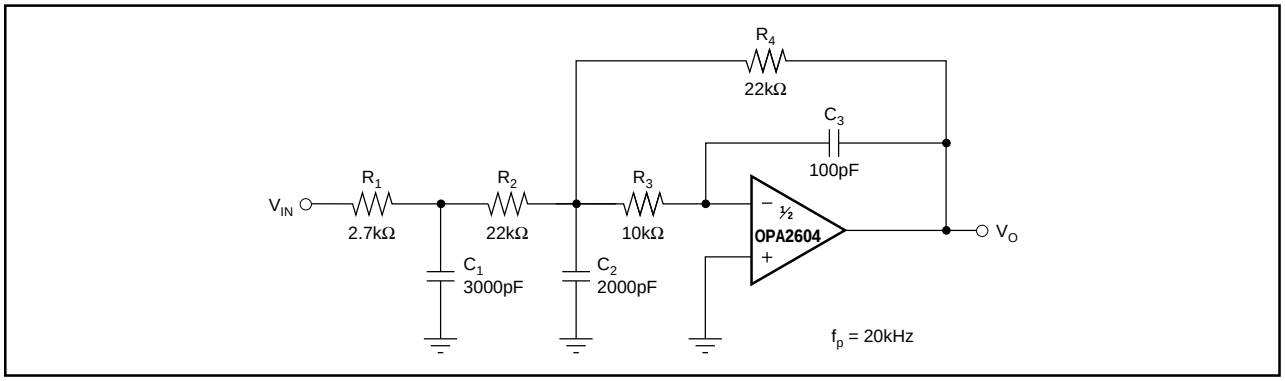

FIGURE 3. Three-Pole Low-Pass Filter.

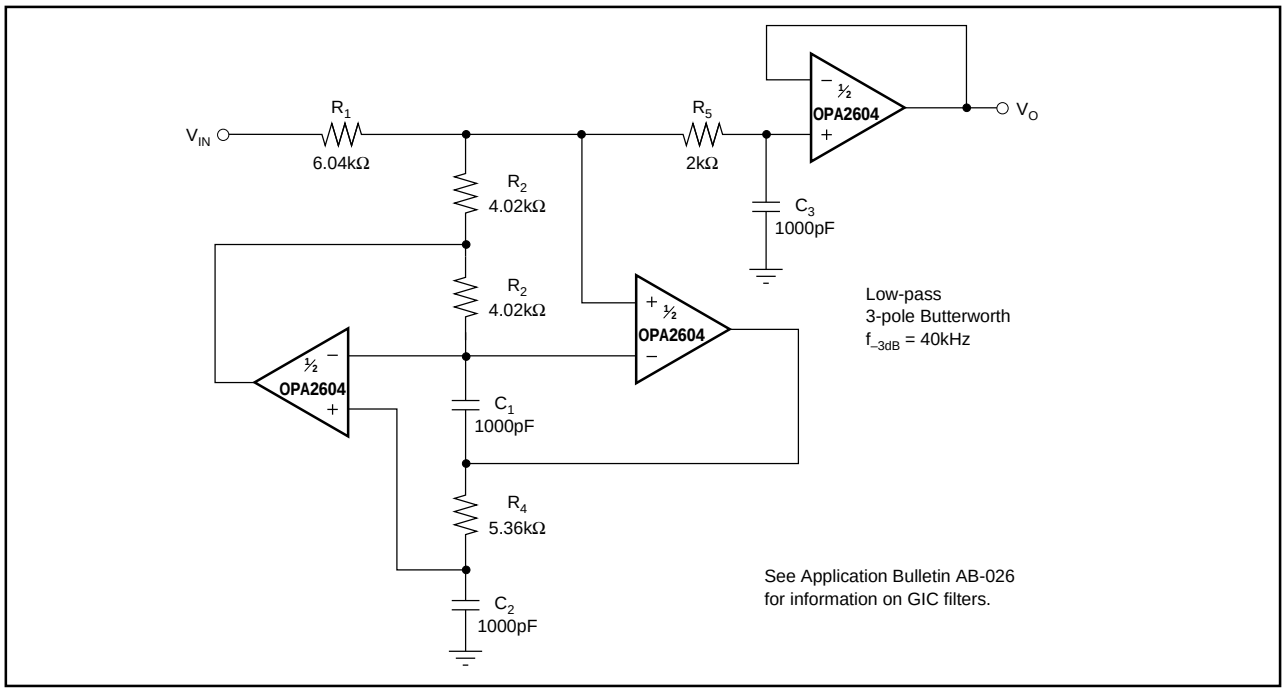

FIGURE 4. Three-Pole Generalized Immittance Converter (GIC) Low-Pass Filter.

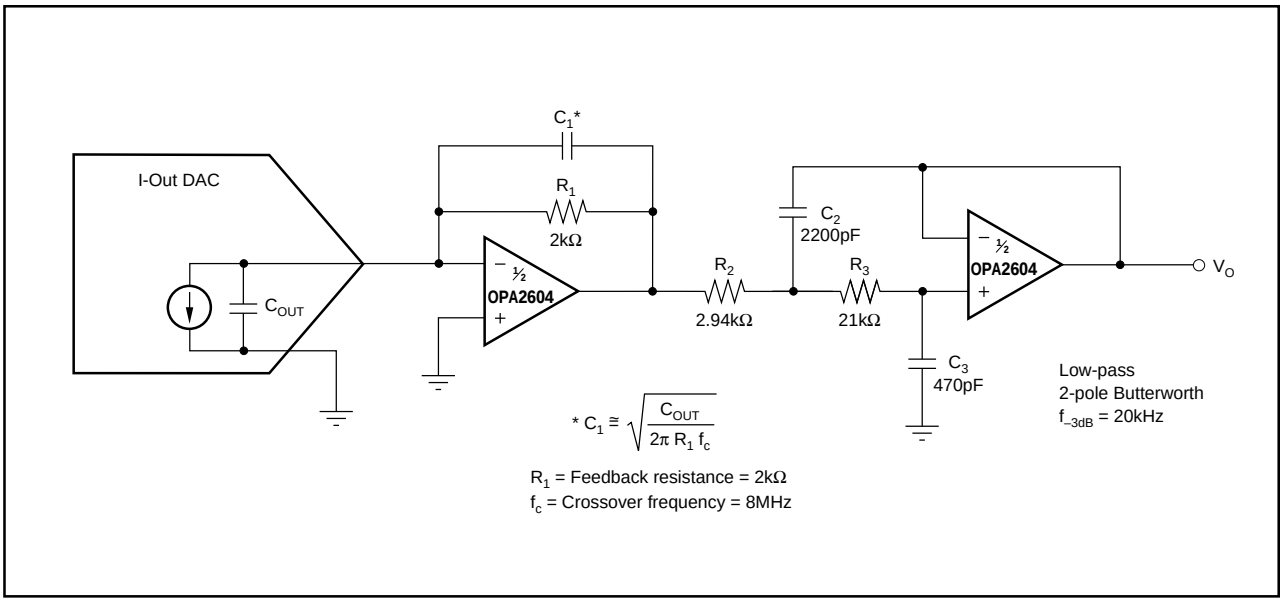

FIGURE 5. DAC I/V Amplifier and Low-Pass Filter.

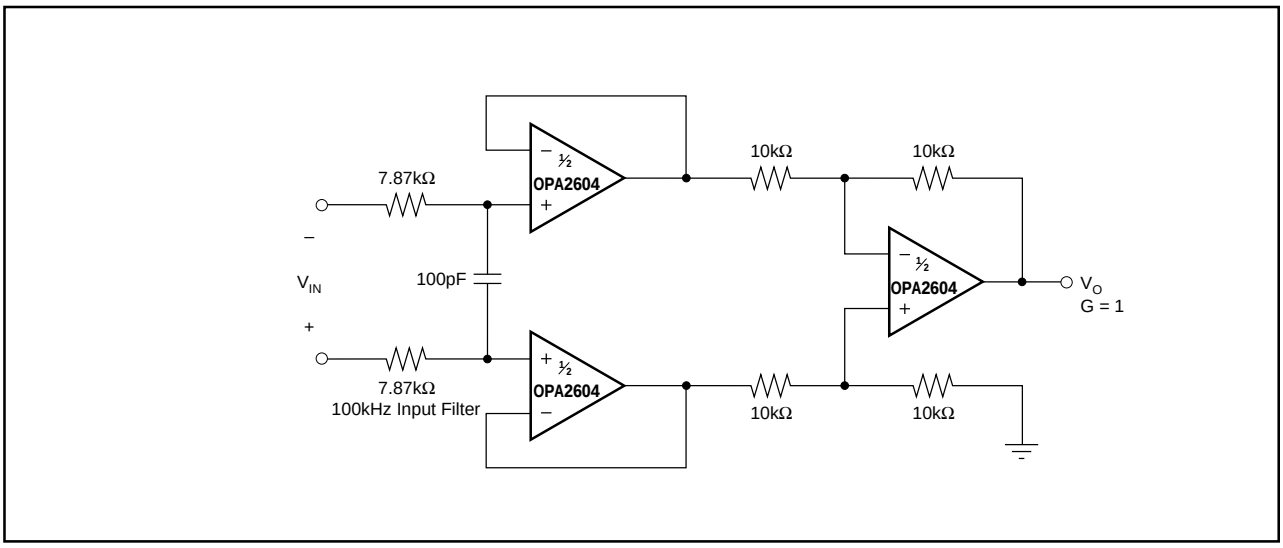

FIGURE 6. Differential Amplifier with Low-Pass Filter.

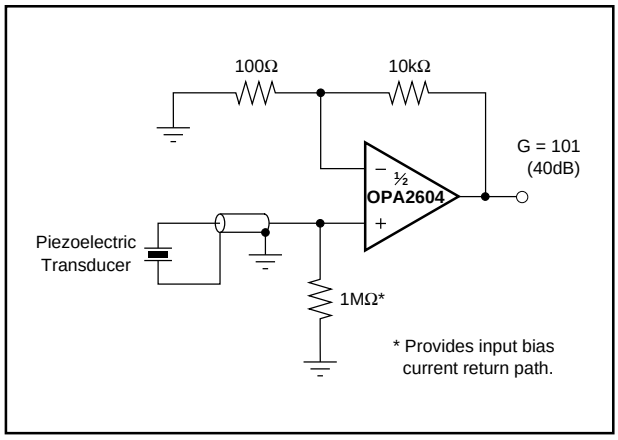

FIGURE 7. High Impedance Amplifier.

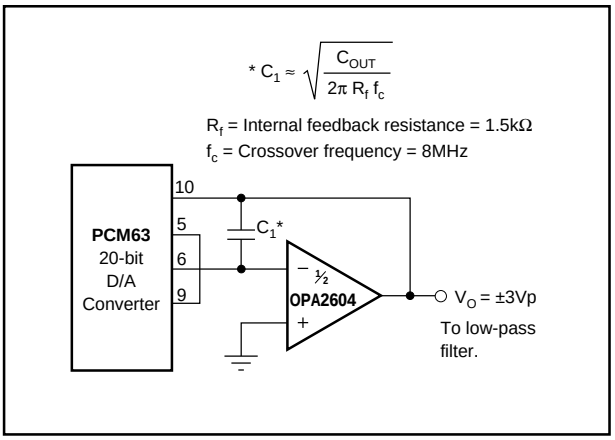

FIGURE 8. Digital Audio DAC I-V Amplifier.

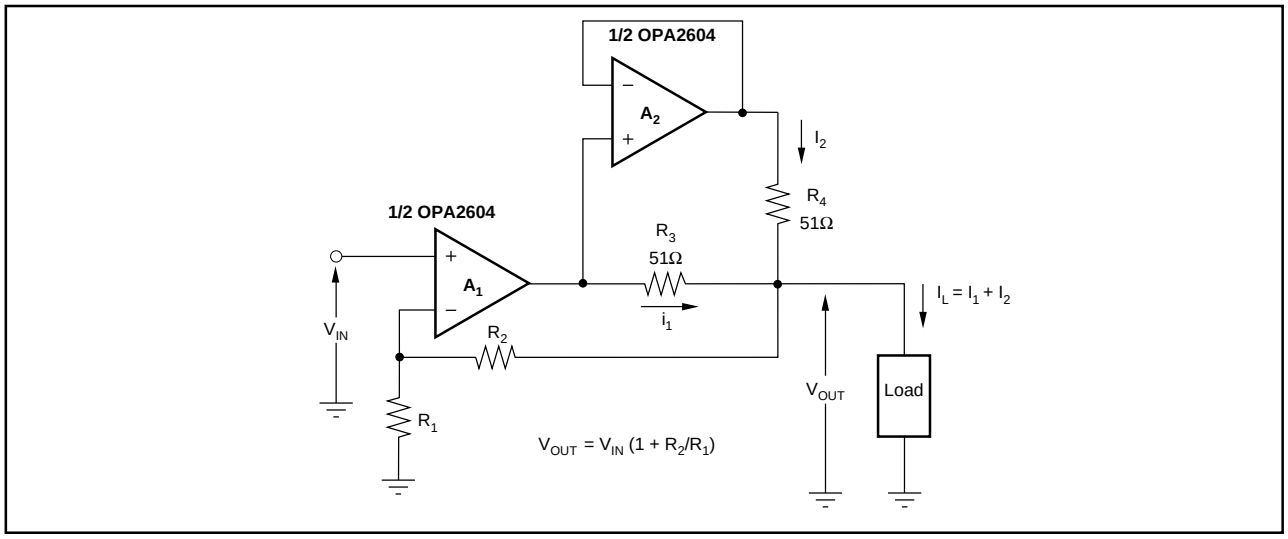

FIGURE 9. Using the Dual OPA2604 Op Amp to Double the Output Current to a Load.

PACKAGING INFORMATION

Orderable Device	Status (1)	Package Type	Package Drawing	Pins	Package Qty	Eco Plan (2)	Lead/Ball Finish	MSL Peak Temp (3)
OPA2604AP	ACTIVE	PDIP	P	8	50	Green (RoHS & no Sb/Br)	CU NIPDAU	N / A for Pkg Type
OPA2604APG4	ACTIVE	PDIP	P	8	50	Green (RoHS & no Sb/Br)	CU NIPDAU	N / A for Pkg Type
OPA2604AU	ACTIVE	SOIC	D	8	100	Green (RoHS & no Sb/Br)	CU NIPDAU	Level-3-260C-168 HR
OPA2604AU/2K5	ACTIVE	SOIC	D	8	2500	Pb-Free (RoHS)	CU NIPDAU	Level-3-260C-168 HR
OPA2604AU/2K5E4	ACTIVE	SOIC	D	8	2500	Pb-Free (RoHS)	CU NIPDAU	Level-3-260C-168 HR
OPA2604AUE4	ACTIVE	SOIC	D	8	100	Green (RoHS & no Sb/Br)	CU NIPDAU	Level-3-260C-168 HR
OPA2604AUG4	ACTIVE	SOIC	D	8	100	Green (RoHS & no Sb/Br)	CU NIPDAU	Level-3-260C-168 HR

(1) The marketing status values are defined as follows:
ACTIVE: Product device recommended for new designs.
LIFEBUY: TI has announced that the device will be discontinued, and a lifetime-buy period is in effect.
NRND: Not recommended for new designs. Device is in production to support existing customers, but TI does not recommend using this part in a new design.
PREVIEW: Device has been announced but is not in production. Samples may or may not be available.
OBSOLETE: TI has discontinued the production of the device.

(2) Eco Plan - The planned eco-friendly classification: Pb-Free (RoHS), Pb-Free (RoHS Exempt), or Green (RoHS & no Sb/Br) - please check http://www.ti.com/productcontent for the latest availability information and additional product content details.
TBD: The Pb-Free/Green conversion plan has not been defined.
Pb-Free (RoHS): TI's terms "Lead-Free" or "Pb-Free" mean semiconductor products that are compatible with the current RoHS requirements for all 6 substances, including the requirement that lead not exceed 0.1% by weight in homogeneous materials. Where designed to be soldered at high temperatures, TI Pb-Free products are suitable for use in specified lead-free processes.
Pb-Free (RoHS Exempt): This component has a RoHS exemption for either 1) lead-based flip-chip solder bumps used between the die and package, or 2) lead-based die adhesive used between the die and leadframe. The component is otherwise considered Pb-Free (RoHS compatible) as defined above.
Green (RoHS & no Sb/Br): TI defines "Green" to mean Pb-Free (RoHS compatible), and free of Bromine (Br) and Antimony (Sb) based flame retardants (Br or Sb do not exceed 0.1% by weight in homogeneous material)

(3) MSL, Peak Temp. -- The Moisture Sensitivity Level rating according to the JEDEC industry standard classifications, and peak solder temperature.

Important Information and Disclaimer: The information provided on this page represents TI's knowledge and belief as of the date that it is provided. TI bases its knowledge and belief on information provided by third parties, and makes no representation or warranty as to the accuracy of such information. Efforts are underway to better integrate information from third parties. TI has taken and continues to take reasonable steps to provide representative and accurate information but may not have conducted destructive testing or chemical analysis on incoming materials and chemicals. TI and TI suppliers consider certain information to be proprietary, and thus CAS numbers and other limited information may not be available for release.

In no event shall TI's liability arising out of such information exceed the total purchase price of the TI part(s) at issue in this document sold by TI to Customer on an annual basis.

IMPORTANT NOTICE

Texas Instruments Incorporated and its subsidiaries (TI) reserve the right to make corrections, modifications, enhancements, improvements, and other changes to its products and services at any time and to discontinue any product or service without notice. Customers should obtain the latest relevant information before placing orders and should verify that such information is current and complete. All products are sold subject to TI's terms and conditions of sale supplied at the time of order acknowledgment.

TI warrants performance of its hardware products to the specifications applicable at the time of sale in accordance with TI's standard warranty. Testing and other quality control techniques are used to the extent TI deems necessary to support this warranty. Except where mandated by government requirements, testing of all parameters of each product is not necessarily performed.

TI assumes no liability for applications assistance or customer product design. Customers are responsible for their products and applications using TI components. To minimize the risks associated with customer products and applications, customers should provide adequate design and operating safeguards.

TI does not warrant or represent that any license, either express or implied, is granted under any TI patent right, copyright, mask work right, or other TI intellectual property right relating to any combination, machine, or process in which TI products or services are used. Information published by TI regarding third-party products or services does not constitute a license from TI to use such products or services or a warranty or endorsement thereof. Use of such information may require a license from a third party under the patents or other intellectual property of the third party, or a license from TI under the patents or other intellectual property of TI.

Reproduction of information in TI data books or data sheets is permissible only if reproduction is without alteration and is accompanied by all associated warranties, conditions, limitations, and notices. Reproduction of this information with alteration is an unfair and deceptive business practice. TI is not responsible or liable for such altered documentation.

Resale of TI products or services with statements different from or beyond the parameters stated by TI for that product or service voids all express and any implied warranties for the associated TI product or service and is an unfair and deceptive business practice. TI is not responsible or liable for any such statements.

Following are URLs where you can obtain information on other Texas Instruments products and application solutions:

Products		**Applications**	
Amplifiers	amplifier.ti.com	Audio	www.ti.com/audio
Data Converters	dataconverter.ti.com	Automotive	www.ti.com/automotive
DSP	dsp.ti.com	Broadband	www.ti.com/broadband
Interface	interface.ti.com	Digital Control	www.ti.com/digitalcontrol
Logic	logic.ti.com	Military	www.ti.com/military
Power Mgmt	power.ti.com	Optical Networking	www.ti.com/opticalnetwork
Microcontrollers	microcontroller.ti.com	Security	www.ti.com/security
Low Power Wireless	www.ti.com/lpw	Telephony	www.ti.com/telephony
		Video & Imaging	www.ti.com/video
		Wireless	www.ti.com/wireless

Mailing Address: Texas Instruments
Post Office Box 655303 Dallas, Texas 75265

Copyright © 2006, Texas Instruments Incorporated

ENTEGRECİ

Bu belge www.entegreci.com üzerinden sunulmaktadır.

Elektronik komponent tedarikinde Entegreci

Entegreci, Eskişehir merkezli, Türkiye geneline satış yapan bir elektronik komponent mağazasıdır. Entegreler (IC), mikrodenetleyiciler, transistörler, diyotlar, pasif elemanlar, konnektörler, modüller ve geliştirme kartları tek adetten seri üretim adetlerine kadar satılır. Ürün sayfalarında güncel stok durumunu, fiyatı ve datasheet bağlantısını bulabilirsiniz.

Parça koduyla arama

Üretici parça numarasını yazın; stok ve fiyatı hemen görün.

www.entegreci.com

Ürün kategorileri

Entegreden kapasitöre tüm elektronik komponent kategorileri.

Kategorilere göz atın

Üreticiler

Aradığınız üreticinin ürünlerini tek sayfada inceleyin.

Üreticileri görün

Toplu alım ve teklif

Listede olmayan ya da yüksek adetli parçalar için teklif isteyin.

Teklif isteyin

www.entegreci.com | **destek@entegreci.com** | **0850 305 90 34**

Entegreci is an online electronic components store based in Türkiye. Search by manufacturer part number to see stock, prices and datasheets for integrated circuits, microcontrollers, transistors, passive components and connectors, or request a quote for parts that are not listed.

Bu sayfa Entegreci tarafından eklenmiştir. Belgenin önceki sayfaları asıl yayıncısına aittir ve içeriği değiştirilmemiştir; en güncel sürüm için belgenin yayıncısına başvurun.