National Semiconductor

January 1988

MM54HCT32/MM74HCT32 Quad 2-Input OR Gate

General Description

The MM54HCT32/MM74HCT32 are logic functions fabricated by using advanced silicon-gate CMOS technology, which provides the inherent benefits of CMOS—low quiescent power and wide power supply range. These devices are input and output characteristic and pin-out compatible with standard DM54LS/74LS logic families. All inputs are protected from static discharge damage by internal diodes to V_{CC} and ground.

MM54HCT/MM74HCT devices are intended to interface between TTL and NMOS components and standard CMOS devices. These parts are also plug-in replacements for LS-TTL devices and can be used to reduce power consumption in existing designs.

Features

- TTL, LS pin-out and threshold compatible
- Fast switching: t_{PLH}, t_{PHL} = 10 ns (typ)
- Low power: 10 μW at DC
- High fan-out, 10 LS-TTL loads

Connection and Logic Diagrams

Dual-In-Line Package

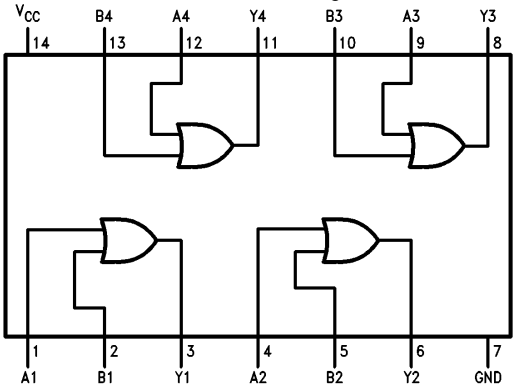

TL/F/9396–1

Order Number MM54HCT32 or MM74HCT32

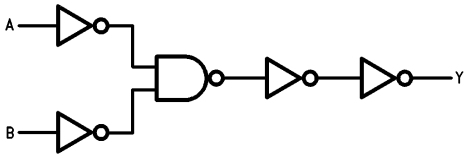

TL/F/9396–2

©1995 National Semiconductor Corporation

RRD-B30M105/Printed in U. S. A.

Absolute Maximum Ratings (Notes 1 & 2)

If Military/Aerospace specified devices are required, please contact the National Semiconductor Sales Office/Distributors for availability and specifications.

Supply Voltage (V_{CC})	−0.5 to +7.0V
DC Input Voltage (V_{IN})	−1.5 to V_{CC} +1.5V
DC Output Voltage (V_{OUT})	−0.5 to V_{CC} +0.5V
Clamp Diode Current (I_{IK}, I_{OK})	±20 mA
DC Output Current, per pin (I_{OUT})	±25 mA
DC V_{CC} or GND Current, per pin (I_{CC})	±50 mA
Storage Temperature Range (T_{STG})	−65°C to +150°C
Power Dissipation (P_D) (Note 3)	600 mW
S.O. Package only	500 mW
Lead Temperature (T_L) (Soldering 10 seconds)	260°C

Operating Conditions

	Min	Max	Units
Supply Voltage (V_{CC})	4.5	5.5	V
DC Input or Output Voltage (V_{IN}, V_{OUT})	0	V_{CC}	V
Operating Temperature Range (T_A)			
MM74HCT	−40	+85	°C
MM54HCT	−55	+125	°C
Input Rise or Fall Times (t_r, t_f)		500	ns

DC Electrical Characteristics V_{CC} = 5V ±10% (unless otherwise specified)

Symbol	Parameter	Conditions	T_A = 25°C	74HCT T_A = −40°C to +85°C	54HCT T_A = −55°C to +125°C	Units
			Typ	Guaranteed Limits		
V_{IH}	Minimum High Level Input Voltage			2.0	2.0	2.0	V
V_{IL}	Maximum Low Level Input Voltage			0.8	0.8	0.8	V
V_{OH}	Minimum High Level Output Voltage	V_{IN} = V_{IH} or V_{IL}					
		$\|I_{OUT}\|$ = 20 μA	V_{CC}	V_{CC} − 0.1	V_{CC} − 0.1	V_{CC} − 0.1	V
		$\|I_{OUT}\|$ = 4.0 mA, V_{CC} = 4.5V	4.2	3.98	3.84	3.7	V
		$\|I_{OUT}\|$ = 4.8 mA, V_{CC} = 5.5V	5.2	4.98	4.84	4.7	V
V_{OL}	Maximum Low Level Voltage	V_{IN} = V_{IH}					
		$\|I_{OUT}\|$ = 20 μA	0	0.1	0.1	0.1	V
		$\|I_{OUT}\|$ = 4.0 mA, V_{CC} = 4.5V	0.2	0.26	0.33	0.4	V
		$\|I_{OUT}\|$ = 4.8 mA, V_{CC} = 5.5V	0.2	0.26	0.33	0.4	V
I_{IN}	Maximum Input Current	V_{IN} = V_{CC} or GND, V_{IH} or V_{IL}		±0.1	±1.0	±1.0	μA
I_{CC}	Maximum Quiescent Supply Current	V_{IN} = V_{CC} or GND, I_{OUT} = 0 μA		2.0	20	40	μA
		V_{IN} = 2.4V or 0.5V (Note 4)		1.2	1.4	1.5	mA

AC Electrical Characteristics V_{CC} = 5.0V, t_r = t_f = 6 ns, C_L = 15 pF, T_A = 25°C (unless otherwise noted)

Symbol	Parameter	Conditions	Typ	Guaranteed Limit	Units
t_{PLH}, t_{PHL}	Maximum Propagation Delay		10		ns

AC Electrical Characteristics V_{CC} = 5.0V ±10%, t_r = t_f = 6 ns, C_L = 50 pF (unless otherwise noted)

Symbol	Parameter	Conditions	T_A = 25°C	74HCT T_A = −40°C to +85°C		54HCT T_A = −55°C to +125°C	Units
			Typ	Guaranteed Limits			
t_{PLH}, t_{PHL}	Maximum Propagation Delay		12	20	25	30	ns
t_{THL}, t_{TLH}	Maximum Output Rise & Fall Time		8	15	19	22	ns
C_{PD}	Power Dissipation Capacitance	(Note 5)	48				pF
C_{IN}	Input Capacitance		5	10	10	10	pF

Note 1: Absolute Maximum Ratings are those values beyond which damage to the device may occur.

Note 2: Unless otherwise specified all voltages are referenced to ground.

Note 3: Power Dissipation temperature derating — plastic "N" package: −12 mW/°C from 65°C to 85°C; ceramic "J" package: −12 mW/°C from 100°C to 125°C.

Note 4: This is measured per input with all other inputs held at V_{CC} or ground.

Note 5: C_{PD} determines the no load dynamic power consumption, $P_D = C_{PD} V_{CC}^2 f + I_{CC} V_{CC}$, and the no load dynamic current consumption, $I_S = C_{PD} V_{CC} f + I_{CC}$.

Physical Dimensions inches (millimeters)

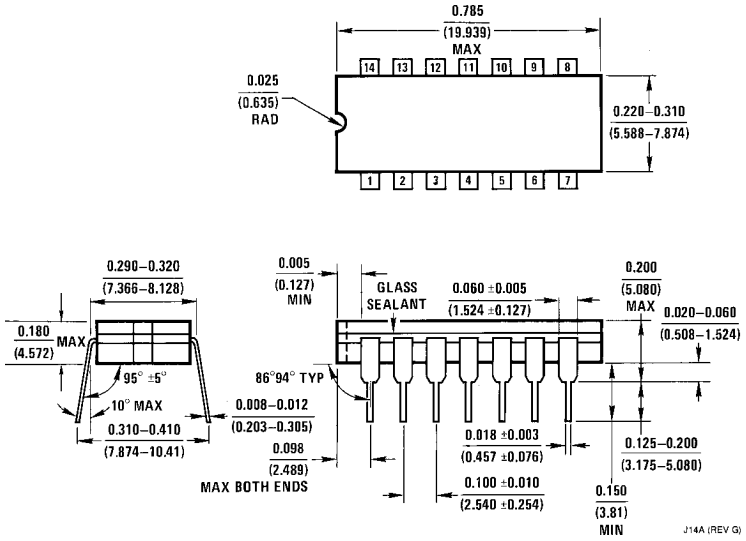

Ceramic Dual-In-Line Package (J)
Order Number MM54HCT32J or MM74HCT32J
NS Package Number J14A

Physical Dimensions inches (millimeters) (Continued)

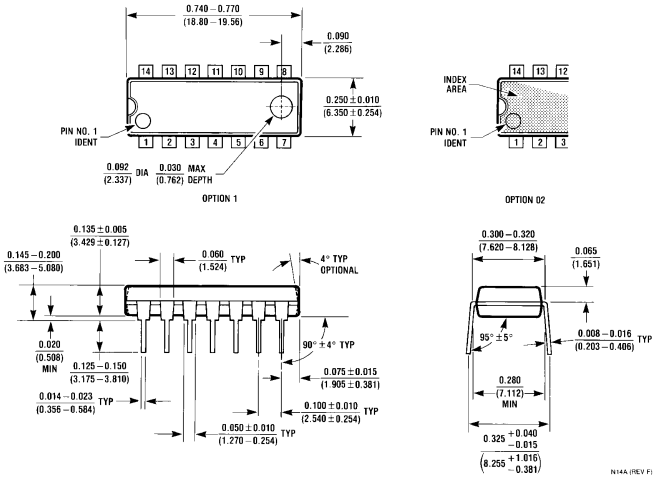

Molded Dual-In-Line Package (N)
Order Number MM74HCT32N
NS Package Number N14A

LIFE SUPPORT POLICY

NATIONAL'S PRODUCTS ARE NOT AUTHORIZED FOR USE AS CRITICAL COMPONENTS IN LIFE SUPPORT DEVICES OR SYSTEMS WITHOUT THE EXPRESS WRITTEN APPROVAL OF THE PRESIDENT OF NATIONAL SEMICONDUCTOR CORPORATION. As used herein:

1. Life support devices or systems are devices or systems which, (a) are intended for surgical implant into the body, or (b) support or sustain life, and whose failure to perform, when properly used in accordance with instructions for use provided in the labeling, can be reasonably expected to result in a significant injury to the user.
2. A critical component is any component of a life support device or system whose failure to perform can be reasonably expected to cause the failure of the life support device or system, or to affect its safety or effectiveness.

National Semiconductor Corporation
1111 West Bardin Road
Arlington, TX 76017
Tel: 1(800) 272-9959
Fax: 1(800) 737-7018

National Semiconductor Europe
Fax: (+49) 0-180-530 85 86
Email: cnjwge@tevm2.nsc.com
Deutsch Tel: (+49) 0-180-530 85 85
English Tel: (+49) 0-180-532 78 32
Français Tel: (+49) 0-180-532 93 58
Italiano Tel: (+49) 0-180-534 16 80

National Semiconductor Hong Kong Ltd.
13th Floor, Straight Block,
Ocean Centre, 5 Canton Rd.
Tsimshatsui, Kowloon
Hong Kong
Tel: (852) 2737-1600
Fax: (852) 2736-9960

National Semiconductor Japan Ltd.
Tel: 81-043-299-2309
Fax: 81-043-299-2408

National does not assume any responsibility for use of any circuitry described, no circuit patent licenses are implied and National reserves the right at any time without notice to change said circuitry and specifications.

This datasheet has been download from:

www.datasheetcatalog.com

Datasheets for electronics components.

National Semiconductor was acquired by Texas Instruments.

http://www.ti.com/corp/docs/investor_relations/pr_09_23_2011_national_semiconductor.html

This file is the datasheet for the following electronic components:

MM74HCT32 - http://www.ti.com/product/mm74hct32?HQS=TI-null-null-dscatalog-df-pf-null-wwe

ENTEGRECİ

Bu belge www.entegreci.com üzerinden sunulmaktadır.

Elektronik komponent tedarikinde Entegreci

Entegreci, Eskişehir merkezli, Türkiye geneline satış yapan bir elektronik komponent mağazasıdır. Entegreler (IC), mikrodenetleyiciler, transistörler, diyotlar, pasif elemanlar, konnektörler, modüller ve geliştirme kartları tek adetten seri üretim adetlerine kadar satılır. Ürün sayfalarında güncel stok durumunu, fiyatı ve datasheet bağlantısını bulabilirsiniz.

Parça koduyla arama

Üretici parça numarasını yazın; stok ve fiyatı hemen görün.

www.entegreci.com

Ürün kategorileri

Entegreden kapasitöre tüm elektronik komponent kategorileri.

Kategorilere göz atın

Üreticiler

Aradığınız üreticinin ürünlerini tek sayfada inceleyin.

Üreticileri görün

Toplu alım ve teklif

Listede olmayan ya da yüksek adetli parçalar için teklif isteyin.

Teklif isteyin

www.entegreci.com | **destek@entegreci.com** | **0850 305 90 34**

Entegreci is an online electronic components store based in Türkiye. Search by manufacturer part number to see stock, prices and datasheets for integrated circuits, microcontrollers, transistors, passive components and connectors, or request a quote for parts that are not listed.

Bu sayfa Entegreci tarafından eklenmiştir. Belgenin önceki sayfaları asıl yayıncısına aittir ve içeriği değiştirilmemiştir; en güncel sürüm için belgenin yayıncısına başvurun.