National Semiconductor

February 1988

MM54C74/MM74C74 Dual D Flip-Flop

General Description

The MM54C74/MM74C74 dual D flip-flop is a monolithic complementary MOS (CMOS) integrated circuit constructed with N- and P-channel enhancement transistors. Each flip-flop has independent data, preset, clear and clock inputs and Q and $\overline{Q}$ outputs. The logic level present at the data input is transferred to the output during the positive going transition of the clock pulse. Preset or clear is independent of the clock and accomplished by a low level at the preset or clear input.

Features

■ Supply voltage range	3V to 15V
■ Tenth power TTL compatible	Drive 2 LPT^{2}L loads
■ High noise immunity	0.45 V_{CC} (typ.)
■ Low power	50 nW (typ.)
■ Medium speed operation	10 MHz (typ.) with 10V supply

Applications

- Automotive
- Data terminals
- Instrumentation
- Medical electronics
- Alarm system
- Industrial electronics
- Remote metering
- Computers

Logic Diagram

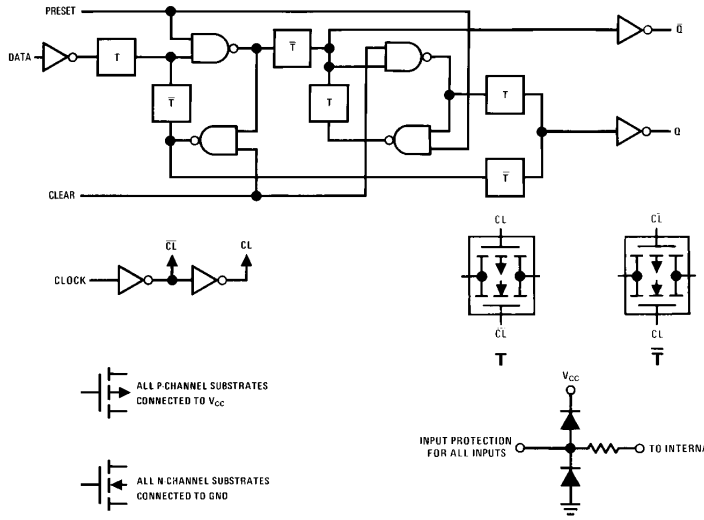

TL/F/5885–1

Truth Table

Preset	Clear	Q_n	$\overline{Q}_n$
0	0	0	0
0	1	1	0
1	0	0	1
1	1	*Q_n	*$\overline{Q}_n$

*No change in output from previous state.

Order Number MM54C74 or MM74C74

Connection Diagram

Dual-In-Line Package

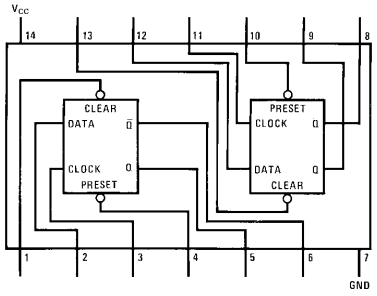

TL/F/5885–2

Top View

Note: A logic "0" on clear sets Q to logic "0".
A logic "0" on preset sets Q to logic "1".

©1995 National Semiconductor Corporation

Absolute Maximum Ratings (Note 1)

If Military/Aerospace specified devices are required, please contact the National Semiconductor Sales Office/Distributors for availability and specifications.

Voltage at Any Pin (Note 1)	$-0.3V$ to $V_{CC} + 0.3V$
Operating Temperature Range	
MM54C74	$-55°C$ to $+125°C$
MM74C74	$-40°C$ to $+85°C$
Storage Temperature Range	$-65°C$ to $+150°C$
Power Dissipation	
Dual-In-Line	700 mW
Small Outline	500 mW
Lead Temperature (Soldering, 10 seconds)	260°C
Operating V_{CC} Range	3V to 15V
V_{CC}(Max)	18V

DC Electrical Characteristics Min/Max limits apply across temperature range unless otherwise specified

Symbol	Parameter	Conditions	Min	Typ	Max	Units
CMOS TO CMOS						
$V_{IN(1)}$	Logical "1" Input Voltage	$V_{CC} = 5V$	3.5			V
		$V_{CC} = 10V$	80			V
$V_{IN(0)}$	Logical "0" Input Voltage	$V_{CC} = 5V$			1.5	V
		$V_{CC} = 10V$			2.0	V
$V_{OUT(1)}$	Logical "1" Output Voltage	$V_{CC} = 5V$	4.5			V
		$V_{CC} = 10V$	9.0			V
$V_{OUT(0)}$	Logical "0" Output Voltage	$V_{CC} = 5V$			0.5	V
		$V_{CC} = 10V$			1.0	V
$I_{IN(1)}$	Logical "1" Input Current	$V_{CC} = 15V$			1.0	μA
$I_{IN(0)}$	Logical "0" Input Current	$V_{CC} = 15V$	-1.0			μA
I_{CC}	Supply Current	$V_{CC} = 15V$		0.05	60	μA
CMOS/LPTTL INTERFACE						
$V_{IN(1)}$	Logical "1" Input Voltage	54C, $V_{CC} = 4.5V$ 74C, $V_{CC} = 4.75V$	$V_{CC} - 1.5$			
$V_{IN(0)}$	Logical "0" Input Voltage	54C, $V_{CC} = 4.75V$ 74C, $V_{CC} = 4.75V$			0.8	V
$V_{OUT(1)}$	Logical "1" Output Voltage	54C, $V_{CC} = 4.5V$, $I_D = -360\ \mu A$ 74C, $V_{CC} = 4.75V$, $I_D = -360\ \mu A$	2.4			V
$V_{OUT(0)}$	Logical "0" Output Voltage	54C, $V_{CC} = 4.5V$, $I_D = 360\ \mu A$ 74C, $V_{CC} = 4.75V$, $I_D = 360\ \mu A$			0.4	V
OUTPUT DRIVE (See 54C/74C Family Characteristics Data Sheet)						
I_{SOURCE}	Output Source Current	$V_{CC} = 5V$, $V_{IN(0)} = 0V$ $T_A = 25°C$, $V_{OUT} = 0V$	-1.75			mA
I_{SOURCE}	Output Source Current	$V_{CC} = 10V$, $V_{IN(0)} = 0V$ $T_A = 25°C$, $V_{OUT} = 0V$	-8.0			mA
I_{SINK}	Output Sink Current	$V_{CC} = 5V$, $V_{IN(1)} = 5V$ $T_A = 25°C$, $V_{OUT} = V_{CC}$	1.75			mA
I_{SINK}	Output Sink Current	$V_{CC} = 10V$, $V_{IN(1)} = 10V$ $T_A = 25°C$, $V_{OUT} = V_{CC}$	8.0			mA

Note 1: "Absolute Maximum Ratings" are those values beyond which the safety of the device cannot be guaranteed. Except for "Operating Temperature Range" they are not meant to imply that the devices should be operated at these limits. The table of "Electrical Characteristics" provides conditions for actual device operation.

AC Electrical Characteristics* $T_A = 25°C$, $C_L = 50$ pF, unless otherwise noted

Symbol	Parameter	Conditions	Min	Typ	Max	Units
C_{IN}	Input Capacitance	Any Input (Note 2)		5.0		pF
t_{pd}	Propagation Delay Time to a Logical "0" t_{pd0} or Logical "1" t_{pd1} from Clock to Q or $\overline{Q}$	$V_{CC} = 5V$ $V_{CC} = 10V$		180 70	300 110	ns ns
t_{pd}	Propagation Delay Time to a Logical "0" from Preset or Clear	$V_{CC} = 5V$ $V_{CC} = 10V$		180 70	300 110	ns ns
t_{pd}	Propagation Delay Time to a Logical "1" from Preset or Clear	$V_{CC} = 5V$ $V_{CC} = 10V$		250 100	400 150	ns ns
t_{S0}, t_{S1}	Time Prior to Clock Pulse that Data Must be Present t_{SETUP}	$V_{CC} = 5V$ $V_{CC} = 10V$	100 40	50 20		ns ns
t_{H0}, t_{H1}	Time after Clock Pulse that Data Must be Held	$V_{CC} = 5V$ $V_{CC} = 10V$		−20 −8.0	0 0	ns ns
t_{PW1}	Minimum Clock Pulse Width ($t_{WL} = t_{WH}$)	$V_{CC} = 5V$ $V_{CC} = 10V$		100 40	250 100	ns ns
t_{PW2}	Minimum Preset and Clear Pulse Width	$V_{CC} = 5V$ $V_{CC} = 10V$		100 40	160 70	ns ns
t_r, t_f	Maximum Clock Rise and Fall Time	$V_{CC} = 5V$ $V_{CC} = 10V$	15.0 5.0			μs μs
f_{MAX}	Maximum Clock Frequency	$V_{CC} = 5V$ $V_{CC} = 10V$	2.0 5.0	3.5 8.0		MHz MHz
C_{PD}	Power Dissipation Capacitance	(Note 3)		40		pF

*AC Parameters are guaranteed by DC correlated testing.

Note 1: "Absolute Maximum Ratings" are those values beyond which the safety of the device cannot be guaranteed. Except for "Operating Temperature Range" they are not meant to imply that the devices should be operated at these limits. The table of "Electrical Characteristics" provides conditions for actual device operation.

Note 2: Capacitance is guaranteed by periodic testing.

Note 3: C_{PD} determines the no load AC power consumption of any CMOS device. For complete explanation see 54C/74C Family Characteristics Application Note—AN-90.

Switching Time Waveform

CMOS to CMOS

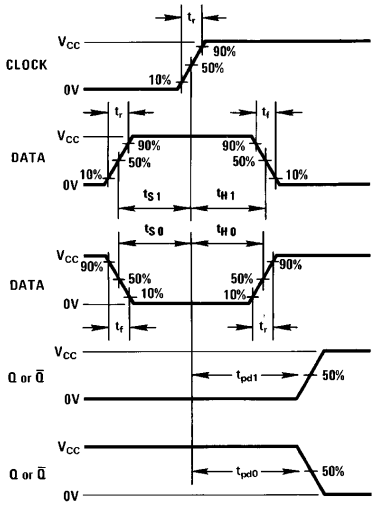

TL/F/5885–3

$t_r = t_f = 20$ ns

AC Test Circuit

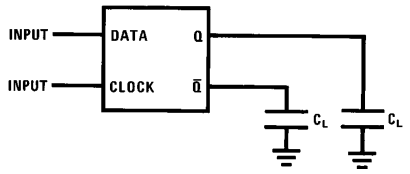

TL/F/5885–4

Typical Applications

Ripple Counter (Divide by 2^n)

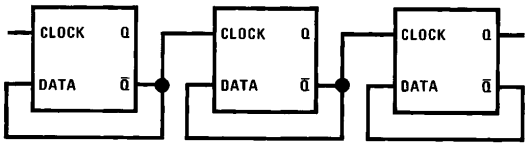

TL/F/5885–5

Shift Register

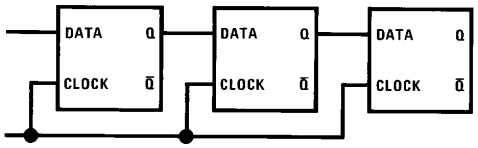

TL/F/5885–6

74C Compatibility

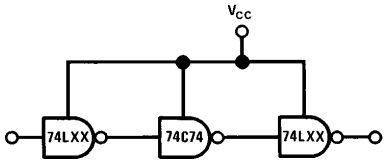

TL/F/5885–7

Guaranteed Noise Margin as a Function of V_{CC}

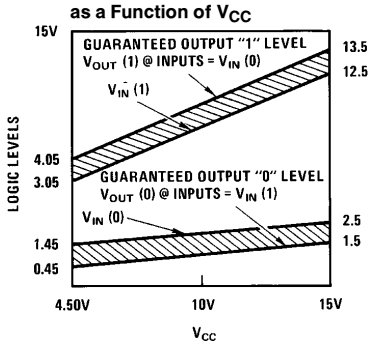

TL/F/5885–8

Physical Dimensions inches (millimeters)

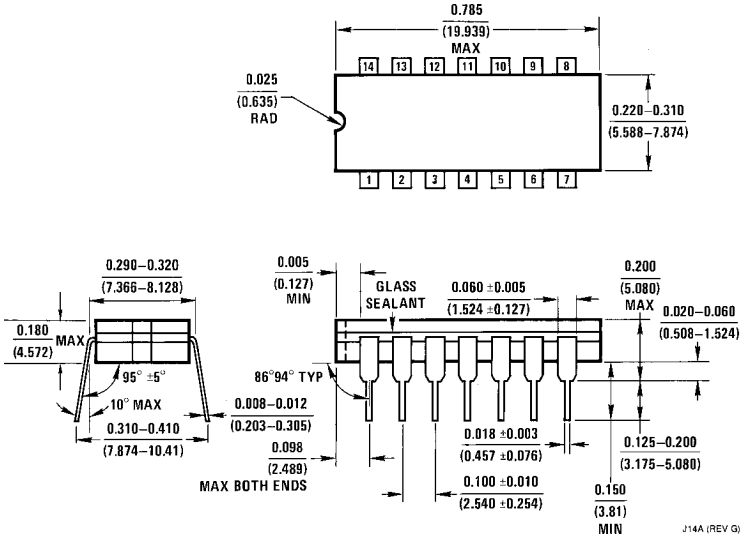

Ceramic Dual-In-Line Package (J)
Order Number MM54C74J or MM74C74J
NS Package Number J14A

Physical Dimensions inches (millimeters) (Continued)

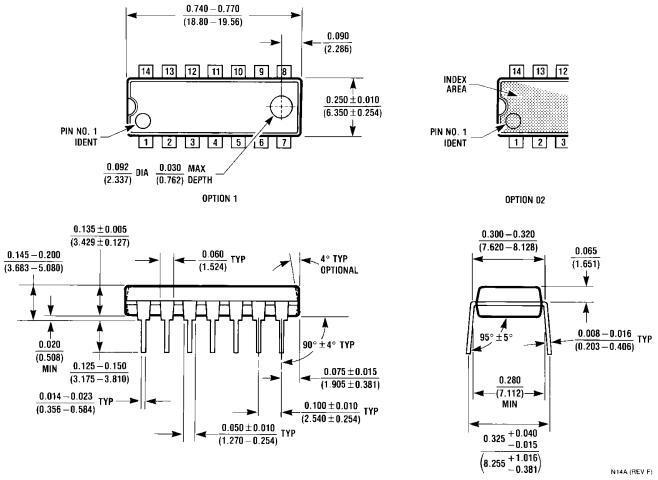

Ceramic Dual-In-Line Package (J)
Order Number MM54C74N or MM74C74N
NS Package Number N14A

LIFE SUPPORT POLICY

NATIONAL'S PRODUCTS ARE NOT AUTHORIZED FOR USE AS CRITICAL COMPONENTS IN LIFE SUPPORT DEVICES OR SYSTEMS WITHOUT THE EXPRESS WRITTEN APPROVAL OF THE PRESIDENT OF NATIONAL SEMICONDUCTOR CORPORATION. As used herein:

1. Life support devices or systems are devices or systems which, (a) are intended for surgical implant into the body, or (b) support or sustain life, and whose failure to perform, when properly used in accordance with instructions for use provided in the labeling, can be reasonably expected to result in a significant injury to the user.
2. A critical component is any component of a life support device or system whose failure to perform can be reasonably expected to cause the failure of the life support device or system, or to affect its safety or effectiveness.

National Semiconductor Corporation
1111 West Bardin Road
Arlington, TX 76017
Tel: 1(800) 272-9959
Fax: 1(800) 737-7018

National Semiconductor Europe
Fax: (+49) 0-180-530 85 86
Email: cnjwge@tevm2.nsc.com
Deutsch Tel: (+49) 0-180-530 85 85
English Tel: (+49) 0-180-532 78 32
Français Tel: (+49) 0-180-532 93 58
Italiano Tel: (+49) 0-180-534 16 80

National Semiconductor Hong Kong Ltd.
13th Floor, Straight Block,
Ocean Centre, 5 Canton Rd.
Tsimshatsui, Kowloon
Hong Kong
Tel: (852) 2737-1600
Fax: (852) 2736-9960

National Semiconductor Japan Ltd.
Tel: 81-043-299-2309
Fax: 81-043-299-2408

National does not assume any responsibility for use of any circuitry described, no circuit patent licenses are implied and National reserves the right at any time without notice to change said circuitry and specifications.

This datasheet has been download from:

www.datasheetcatalog.com

Datasheets for electronics components.

National Semiconductor was acquired by Texas Instruments.

http://www.ti.com/corp/docs/investor_relations/pr_09_23_2011_national_semiconductor.html

This file is the datasheet for the following electronic components:

MM74C74 - http://www.ti.com/product/mm74c74?HQS=TI-null-null-dscatalog-df-pf-null-wwe

MM54C74 - http://www.ti.com/product/mm54c74?HQS=TI-null-null-dscatalog-df-pf-null-wwe

ENTEGRECİ

Bu belge www.entegreci.com üzerinden sunulmaktadır.

Elektronik komponent tedarikinde Entegreci

Entegreci, Eskişehir merkezli, Türkiye geneline satış yapan bir elektronik komponent mağazasıdır. Entegreler (IC), mikrodenetleyiciler, transistörler, diyotlar, pasif elemanlar, konnektörler, modüller ve geliştirme kartları tek adetten seri üretim adetlerine kadar satılır. Ürün sayfalarında güncel stok durumunu, fiyatı ve datasheet bağlantısını bulabilirsiniz.

Parça koduyla arama

Üretici parça numarasını yazın; stok ve fiyatı hemen görün.

www.entegreci.com

Ürün kategorileri

Entegreden kapasitöre tüm elektronik komponent kategorileri.

Kategorilere göz atın

Üreticiler

Aradığınız üreticinin ürünlerini tek sayfada inceleyin.

Üreticileri görün

Toplu alım ve teklif

Listede olmayan ya da yüksek adetli parçalar için teklif isteyin.

Teklif isteyin

www.entegreci.com | **destek@entegreci.com** | **0850 305 90 34**

Entegreci is an online electronic components store based in Türkiye. Search by manufacturer part number to see stock, prices and datasheets for integrated circuits, microcontrollers, transistors, passive components and connectors, or request a quote for parts that are not listed.

Bu sayfa Entegreci tarafından eklenmiştir. Belgenin önceki sayfaları asıl yayıncısına aittir ve içeriği değiştirilmemiştir; en güncel sürüm için belgenin yayıncısına başvurun.