B-Suffix Series CMOS Gates

The B Series logic gates are constructed with P and N channel enhancement mode devices in a single monolithic structure (Complementary MOS). Their primary use is where low power dissipation and/or high noise immunity is desired.

- Supply Voltage Range = 3.0 Vdc to 18 Vdc
- All Outputs Buffered
- Capable of Driving Two Low–power TTL Loads or One Low–power Schottky TTL Load Over the Rated Temperature Range.
- Double Diode Protection on All Inputs Except: Triple Diode Protection on MC14011B and MC14081B
- Pin–for–Pin Replacements for Corresponding CD4000 Series B Suffix Devices (Exceptions: MC14068B and MC14078B)

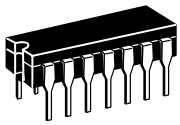

L SUFFIX
CERAMIC
CASE 632

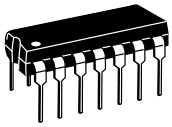

P SUFFIX
PLASTIC
CASE 646



D SUFFIX
SOIC
CASE 751A

ORDERING INFORMATION

MC14XXXBCP	Plastic
MC14XXXBCL	Ceramic
MC14XXXBD	SOIC

T_A = – 55° to 125°C for all packages.

MAXIMUM RATINGS* (Voltages Referenced to V_{SS})

Symbol	Parameter	Value	Unit
V_{DD}	DC Supply Voltage	– 0.5 to + 18.0	V
V_{in}, V_{out}	Input or Output Voltage (DC or Transient)	– 0.5 to V_{DD} + 0.5	V
I_{in}, I_{out}	Input or Output Current (DC or Transient), per Pin	± 10	mA
P_D	Power Dissipation, per Package†	500	mW
T_{stg}	Storage Temperature	– 65 to + 150	°C
T_L	Lead Temperature (8–Second Soldering)	260	°C

* Maximum Ratings are those values beyond which damage to the device may occur.
†Temperature Derating:
Plastic “P and D/DW” Packages: – 7.0 mW/°C From 65°C To 125°C
Ceramic “L” Packages: – 12 mW/°C From 100°C To 125°C

This device contains protection circuitry to guard against damage due to high static voltages or electric fields. However, precautions must be taken to avoid applications of any voltage higher than maximum rated voltages to this high-impedance circuit. For proper operation, V_{in} and V_{out} should be constrained to the range $V_{SS} \le (V_{in}$ or $V_{out}) \le V_{DD}$.
Unused inputs must always be tied to an appropriate logic voltage level (e.g., either V_{SS} or V_{DD}). Unused outputs must be left open.

MC14001B
Quad 2-Input NOR Gate

MC14002B
Dual 4-Input NOR Gate

MC14011B
Quad 2-Input NAND Gate

MC14012B
Dual 4-Input NAND Gate

MC14023B
Triple 3-Input NAND Gate

MC14025B
Triple 3-Input NOR Gate

MC14068B
8-Input NAND Gate

MC14071B
Quad 2-Input OR Gate

MC14072B
Dual 4-Input OR Gate

MC14073B
Triple 3-Input AND Gate

MC14075B
Triple 3-Input OR Gate

MC14078B
8-Input NOR Gate

MC14081B
Quad 2-Input AND Gate

MC14082B
Dual 4-Input AND Gate

REV 3
1/94

© Motorola, Inc. 1995

LOGIC DIAGRAMS

NOR

MC14001B
Quad 2–Input NOR Gate

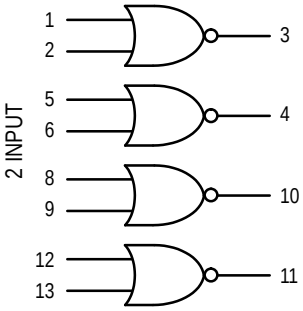

MC14025B
Triple 3–Input NOR Gate

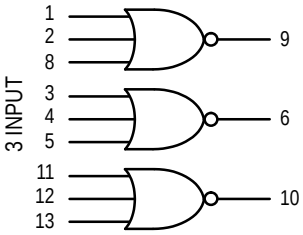

MC14002B
Dual 4–Input NOR Gate

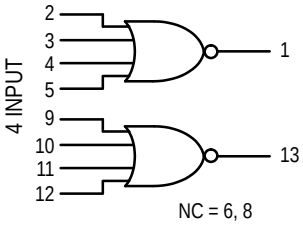

MC14078B
8–Input NOR Gate

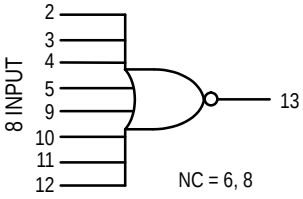

NAND

MC14011B
Quad 2–Input NAND Gate

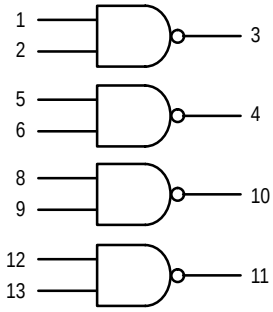

MC14023B
Triple 3–Input NAND Gate

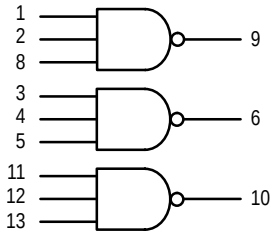

MC14012B
Dual 4–Input NAND Gate

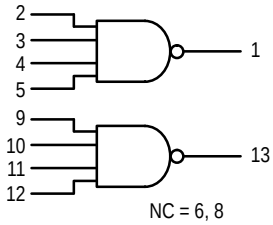

MC14068B
8–Input NAND Gate

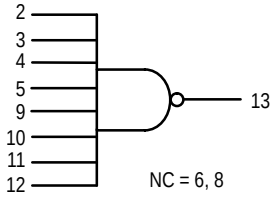

OR

MC14071B
Quad 2–Input OR Gate

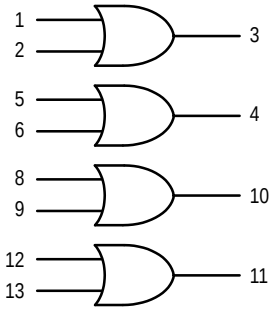

MC14075B
Triple 3–Input OR Gate

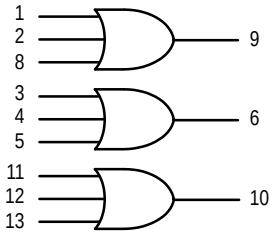

MC14072B
Dual 4–Input OR Gate

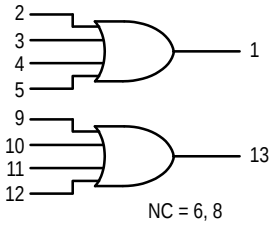

AND

MC14081B
Quad 2–Input AND Gate

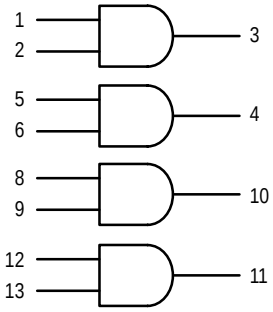

MC14073B
Triple 3–Input AND Gate

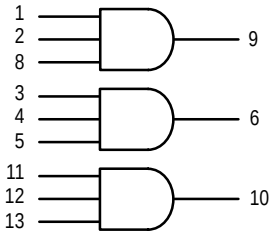

MC14082B
Dual 4–Input AND Gate

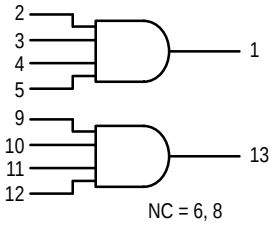

V_{DD} = PIN 14
V_{SS} = PIN 7
FOR ALL DEVICES

PIN ASSIGNMENTS

MC14001B
Quad 2–Input NOR Gate

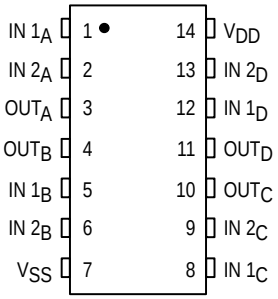

MC14002B
Dual 4–Input NOR Gate

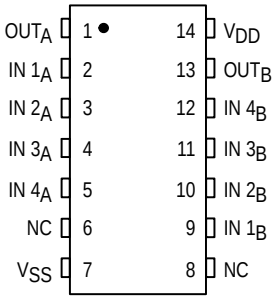

MC14011B
Quad 2–Input NAND Gate

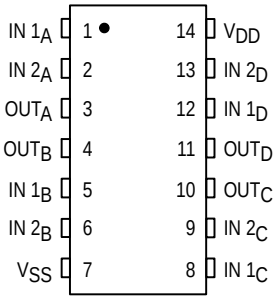

MC14012B
Dual 4–Input NAND Gate

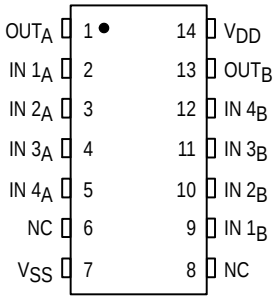

MC14023B
Triple 3–Input NAND Gate

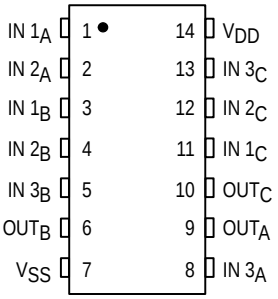

MC14025B
Triple 3–Input NOR Gate

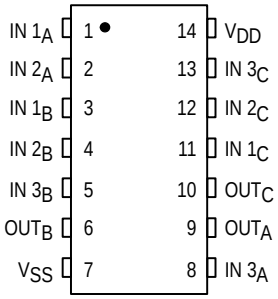

MC14068B
8–Input NAND Gate

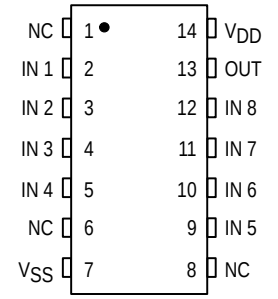

MC14071B
Quad 2–Input OR Gate

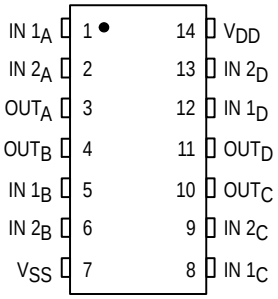

MC14072B
Dual 4–Input OR Gate

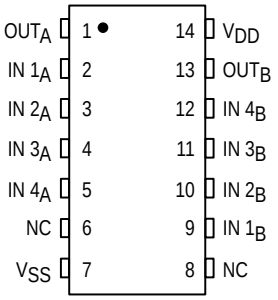

MC14073B
Triple 3–Input AND Gate

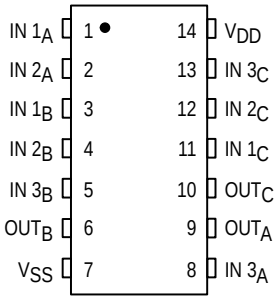

MC14075B
Triple 3–Input OR Gate

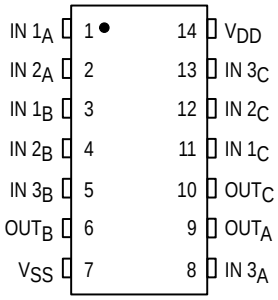

MC14078B
8–Input NOR Gate

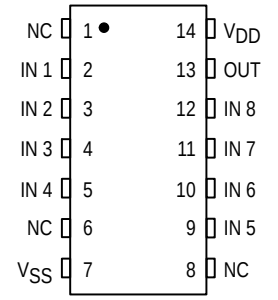

MC14081B
Quad 2–Input AND Gate

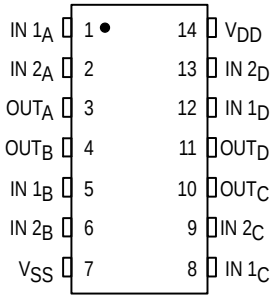

MC14082B
Dual 4–Input AND Gate

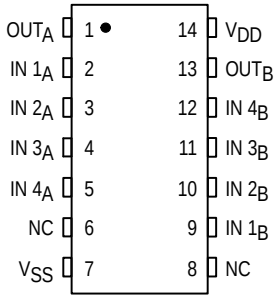

NC = NO CONNECTION

ELECTRICAL CHARACTERISTICS (Voltages Referenced to V_{SS})

Characteristic	Symbol	V_{DD} Vdc	– 55°C Min	– 55°C Max	25°C Min	25°C Typ #	25°C Max	125°C Min	125°C Max	Unit
Output Voltage "0" Level	V_{OL}	5.0	—	0.05	—	0	0.05	—	0.05	Vdc
V_{in} = V_{DD} or 0		10	—	0.05	—	0	0.05	—	0.05	
		15	—	0.05	—	0	0.05	—	0.05	
"1" Level	V_{OH}	5.0	4.95	—	4.95	5.0	—	4.95	—	Vdc
V_{in} = 0 or V_{DD}		10	9.95	—	9.95	10	—	9.95	—	
		15	14.95	—	14.95	15	—	14.95	—	
Input Voltage "0" Level	V_{IL}									Vdc
(V_O = 4.5 or 0.5 Vdc)		5.0	—	1.5	—	2.25	1.5	—	1.5	
(V_O = 9.0 or 1.0 Vdc)		10	—	3.0	—	4.50	3.0	—	3.0	
(V_O = 13.5 or 1.5 Vdc)		15	—	4.0	—	6.75	4.0	—	4.0	
"1" Level	V_{IH}									Vdc
(V_O = 0.5 or 4.5 Vdc)		5.0	3.5	—	3.5	2.75	—	3.5	—	
(V_O = 1.0 or 9.0 Vdc)		10	7.0	—	7.0	5.50	—	7.0	—	
(V_O = 1.5 or 13.5 Vdc)		15	11	—	11	8.25	—	11	—	
Output Drive Current	I_{OH}									mAdc
(V_{OH} = 2.5 Vdc) Source		5.0	– 3.0	—	– 2.4	– 4.2	—	– 1.7	—	
(V_{OH} = 4.6 Vdc)		5.0	– 0.64	—	– 0.51	– 0.88	—	– 0.36	—	
(V_{OH} = 9.5 Vdc)		10	– 1.6	—	– 1.3	– 2.25	—	– 0.9	—	
(V_{OH} = 13.5 Vdc)		15	– 4.2	—	– 3.4	– 8.8	—	– 2.4	—	
(V_{OL} = 0.4 Vdc) Sink	I_{OL}	5.0	0.64	—	0.51	0.88	—	0.36	—	mAdc
(V_{OL} = 0.5 Vdc)		10	1.6	—	1.3	2.25	—	0.9	—	
(V_{OL} = 1.5 Vdc)		15	4.2	—	3.4	8.8	—	2.4	—	
Input Current	I_{in}	15	—	± 0.1	—	±0.00001	± 0.1	—	± 1.0	µAdc
Input Capacitance (V_{in} = 0)	C_{in}	—	—	—	—	5.0	7.5	—	—	pF
Quiescent Current (Per Package)	I_{DD}	5.0	—	0.25	—	0.0005	0.25	—	7.5	µAdc
		10	—	0.5	—	0.0010	0.5	—	15	
		15	—	1.0	—	0.0015	1.0	—	30	
Total Supply Current**† (Dynamic plus Quiescent, Per Gate, C_L = 50 pF)	I_T	5.0	I_T = (0.3 µA/kHz) f + I_{DD}/N							µAdc
		10	I_T = (0.6 µA/kHz) f + I_{DD}/N							
		15	I_T = (0.9 µA/kHz) f + I_{DD}/N							

#Data labelled "Typ" is not to be used for design purposes but is intended as an indication of the IC's potential performance.

** The formulas given are for the typical characteristics only at 25°C.

†To calculate total supply current at loads other than 50 pF:

$$I_T(C_L) = I_T(50\ pF) + (C_L - 50)\ Vfk$$

where: I_T is in µA (per package), C_L in pF, V = (V_{DD} – V_{SS}) in volts, f in kHz is input frequency, and k = 0.001 x the number of exercised gates per package.

B–SERIES GATE SWITCHING TIMES

SWITCHING CHARACTERISTICS* (C_L = 50 pF, T_A = 25°C)

Characteristic	Symbol	V_{DD} Vdc	Min	Typ #	Max	Unit
Output Rise Time, All B–Series Gates	t_{TLH}					ns
t_{TLH} = (1.35 ns/pF) C_L + 33 ns		5.0	—	100	200	
t_{TLH} = (0.60 ns/pF) C_L + 20 ns		10	—	50	100	
t_{TLH} = (0.40 ns/PF) C_L + 20 ns		15	—	40	80	
Output Fall Time, All B–Series Gates	t_{THL}					ns
t_{THL} = (1.35 ns/pF) C_L + 33 ns		5.0	—	100	200	
t_{THL} = (0.60 ns/pF) C_L + 20 ns		10	—	50	100	
t_{THL} = (0.40 ns/pF) C_L + 20 ns		15	—	40	80	
Propagation Delay Time	t_{PLH}, t_{PHL}					ns
MC14001B, MC14011B only						
t_{PLH}, t_{PHL} = (0.90 ns/pF) C_L + 80 ns		5.0	—	125	250	
t_{PLH}, t_{PHL} = (0.36 ns/pF) C_L + 32 ns		10	—	50	100	
t_{PLH}, t_{PHL} = (0.26 ns/pF) C_L + 27 ns		15	—	40	80	
All Other 2, 3, and 4 Input Gates						
t_{PLH}, t_{PHL} = (0.90 ns/pF) C_L + 115 ns		5.0	—	160	300	
t_{PLH}, t_{PHL} = (0.36 ns/pF) C_L + 47 ns		10	—	65	130	
t_{PLH}, t_{PHL} = (0.26 ns/pF) C_L + 37 ns		15	—	50	100	
8–Input Gates (MC14068B, MC14078B)						
t_{PLH}, t_{PHL} = (0.90 ns/pF) C_L + 155 ns		5.0	—	200	350	
t_{PLH}, t_{PHL} = (0.36 ns/pF) C_L + 62 ns		10	—	80	150	
t_{PLH}, t_{PHL} = (0.26 ns/pF) C_L + 47 ns		15	—	60	110	

* The formulas given are for the typical characteristics only at 25°C.
#Data labelled “Typ” is not to be used for design purposes but is intended as an indication of the IC’s potential performance.

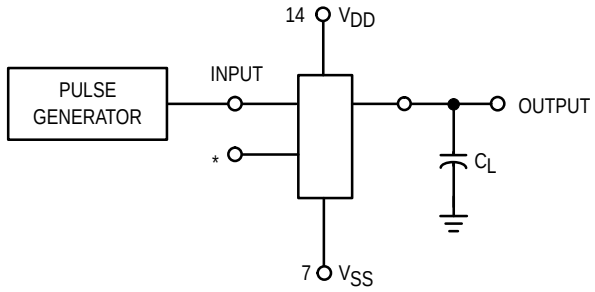

* All unused inputs of AND, NAND gates must be connected to V_{DD}.
All unused inputs of OR, NOR gates must be connected to V_{SS}.

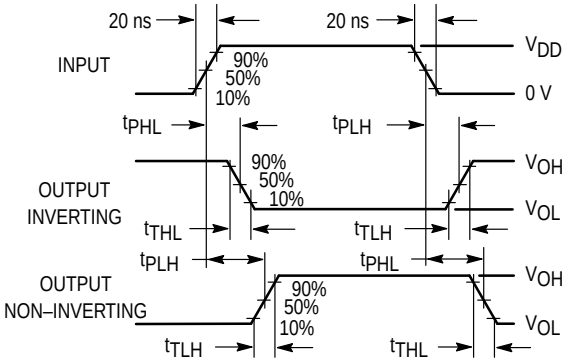

Figure 1. Switching Time Test Circuit and Waveforms

CIRCUIT SCHEMATIC
NOR, OR GATES

MC14001B, MC14071B
One of Four Gates Shown

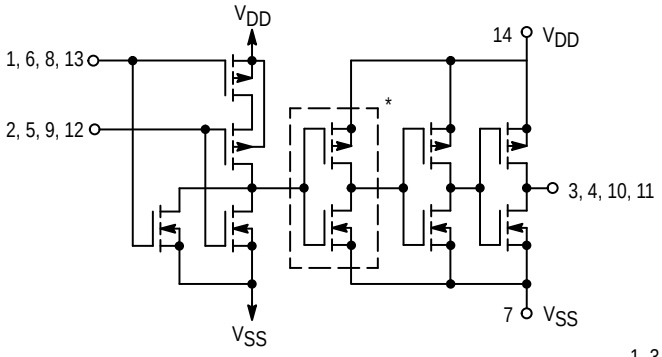

* Inverter omitted in MC14001B

MC14025B, MC14075B
One of Three Gates Shown

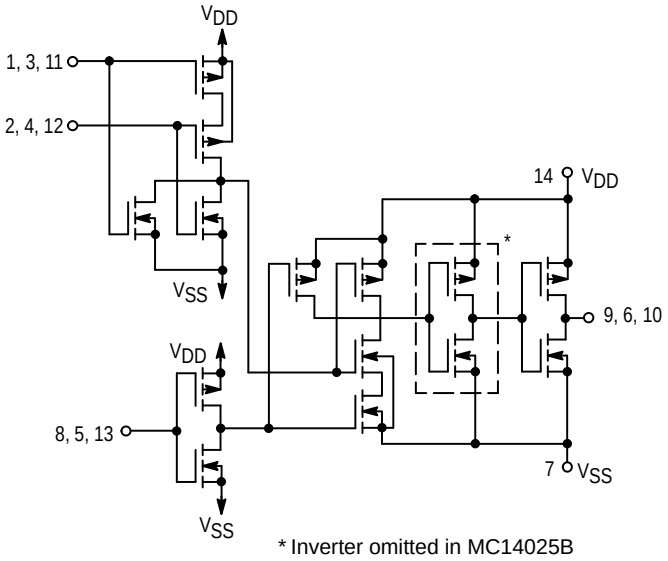

* Inverter omitted in MC14025B

MC14002B, MC14072B
One of Two Gates Shown

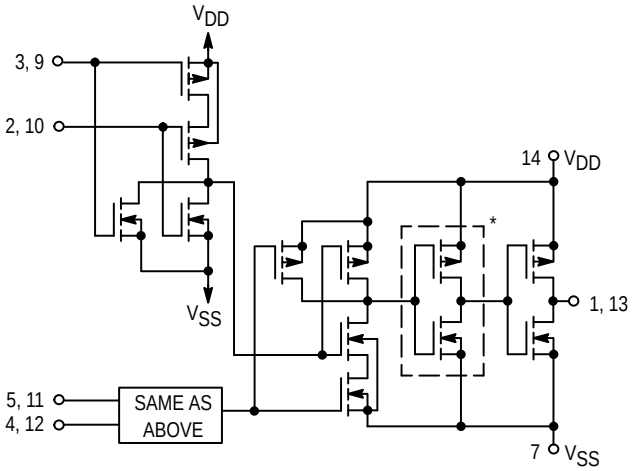

* Inverter omitted in MC14002B

MC14078B
Eight Input Gate

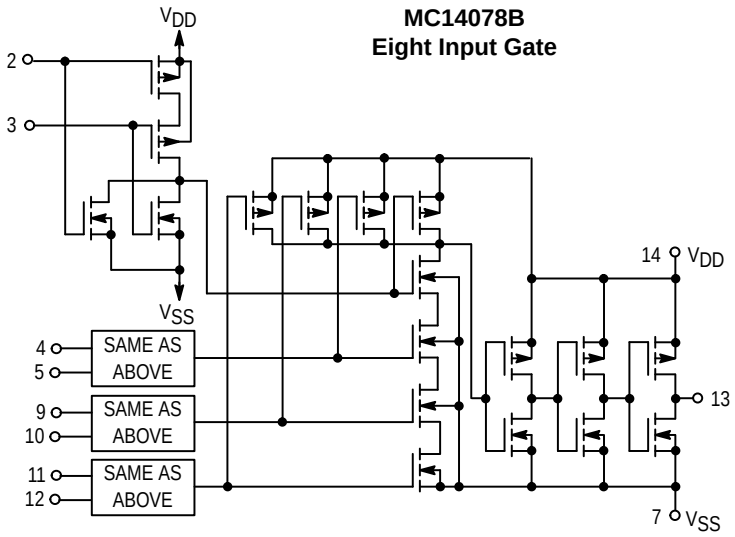

CIRCUIT SCHEMATIC
NAND, AND GATES

MC14011B, MC14081B
One of Four Gates Shown

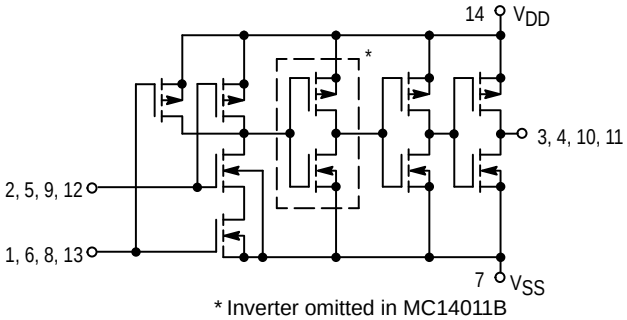

* Inverter omitted in MC14011B

MC14023B, MC14073B
One of Three Gates Shown

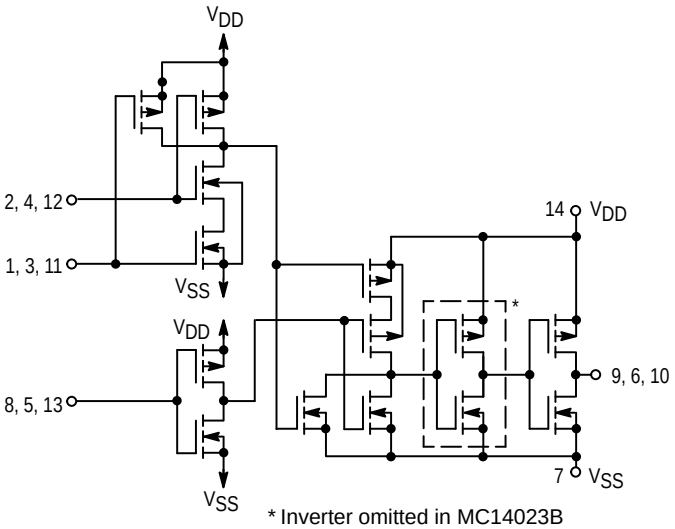

* Inverter omitted in MC14023B

MC14012B, MC14082B
One of Two Gates Shown

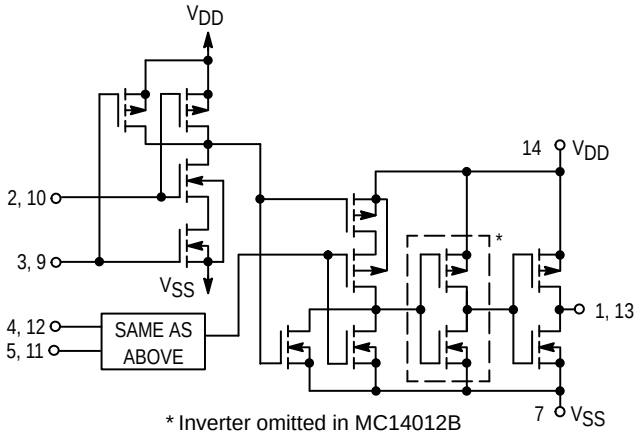

* Inverter omitted in MC14012B

MC14068B
Eight Input Gate

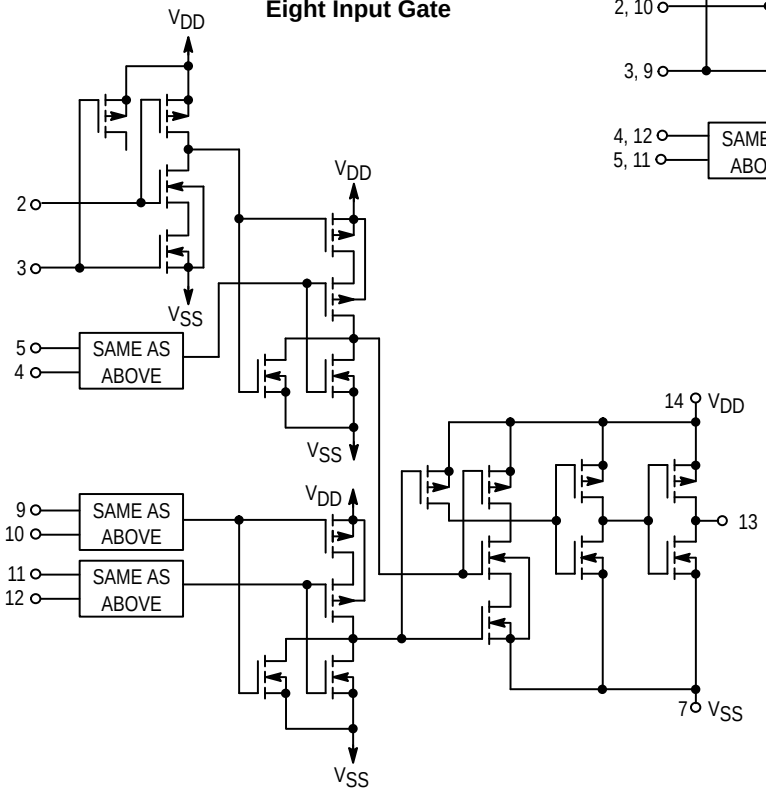

TYPICAL B–SERIES GATE CHARACTERISTICS

N–CHANNEL DRAIN CURRENT (SINK)

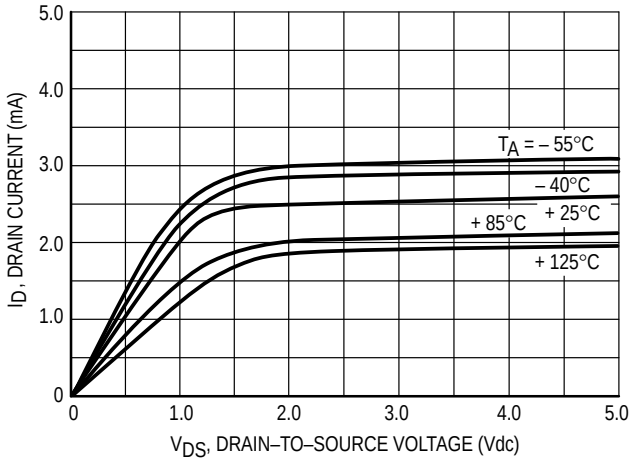

Figure 2. V_{GS} = 5.0 Vdc

P–CHANNEL DRAIN CURRENT (SOURCE)

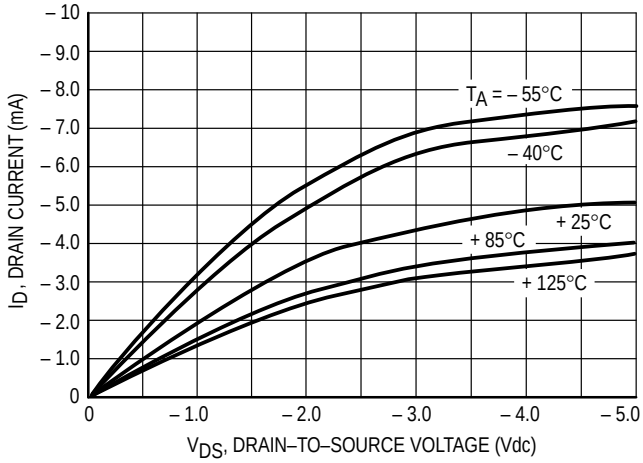

Figure 3. V_{GS} = – 5.0 Vdc

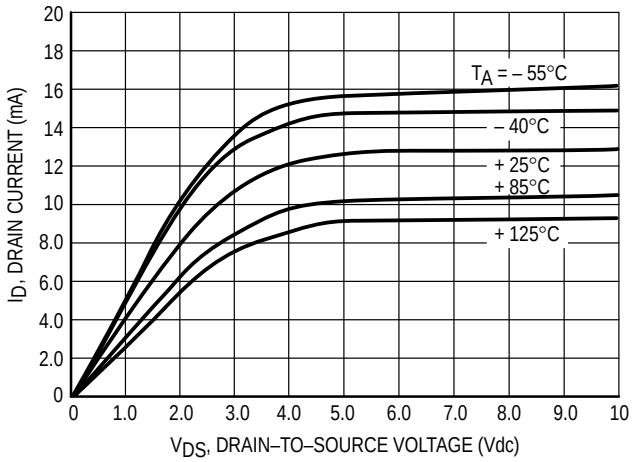

Figure 4. V_{GS} = 10 Vdc

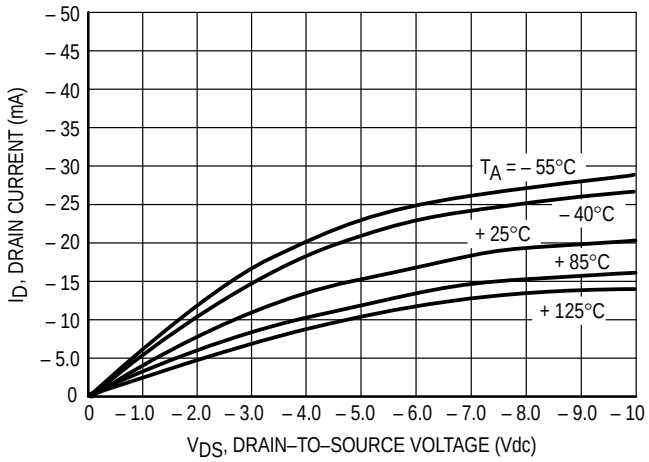

Figure 5. V_{GS} = – 10 Vdc

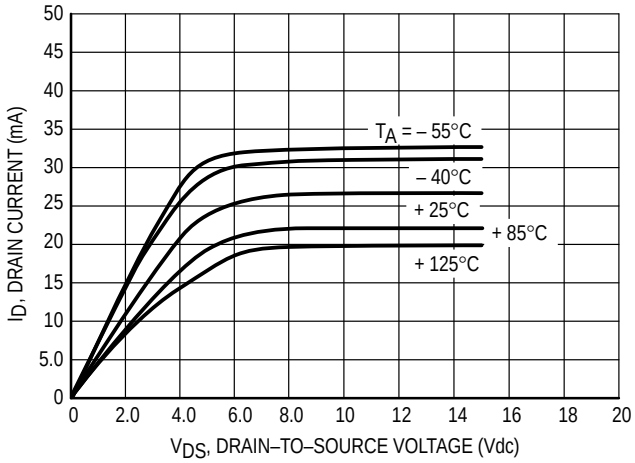

Figure 6. V_{GS} = 15 Vdc

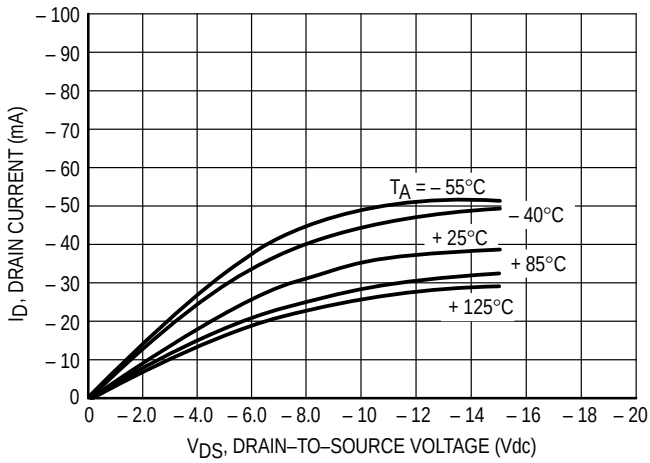

Figure 7. V_{GS} = – 15 Vdc

These typical curves are not guarantees, but are design aids.
Caution: The maximum rating for output current is 10 mA per pin.

TYPICAL B–SERIES GATE CHARACTERISTICS (cont'd)

VOLTAGE TRANSFER CHARACTERISTICS

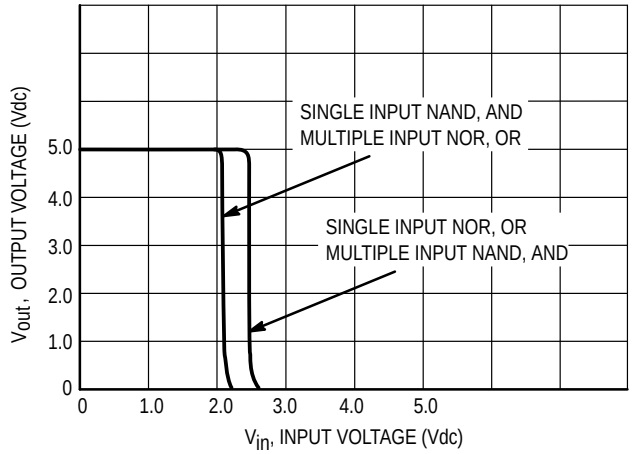

Figure 8. V_{DD} = 5.0 Vdc

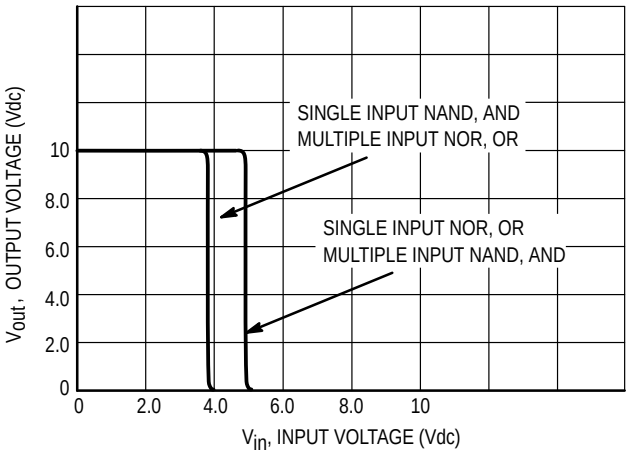

Figure 9. V_{DD} = 10 Vdc

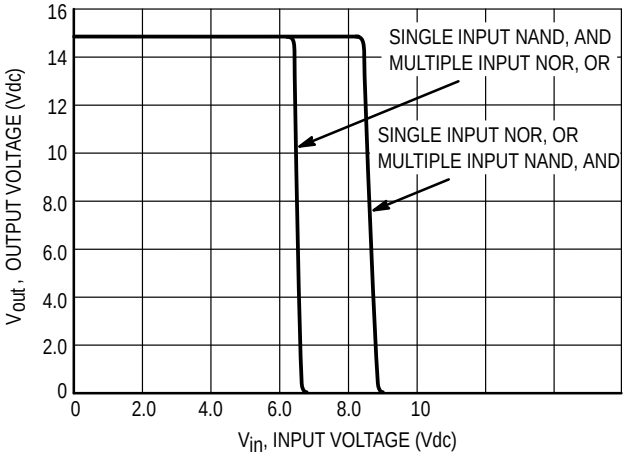

Figure 10. V_{DD} = 15 Vdc

DC NOISE MARGIN

The DC noise margin is defined as the input voltage range from an ideal "1" or "0" input level which does not produce output state change(s). The typical and guaranteed limit values of the input values V_{IL} and V_{IH} for the output(s) to be at a fixed voltage V_O are given in the Electrical Characteristics table. V_{IL} and V_{IH} are presented graphically in Figure 11.

Guaranteed minimum noise margins for both the "1" and "0" levels =

1.0 V with a 5.0 V supply
2.0 V with a 10.0 V supply
2.5 V with a 15.0 V supply

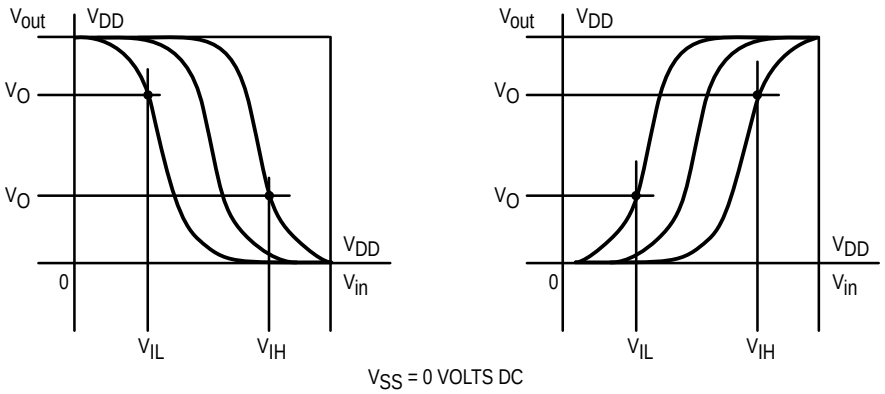

(a) Inverting Function **(b) Non–Inverting Function**

Figure 11. DC Noise Immunity

OUTLINE DIMENSIONS

L SUFFIX
CERAMIC DIP PACKAGE
CASE 632–08
ISSUE Y

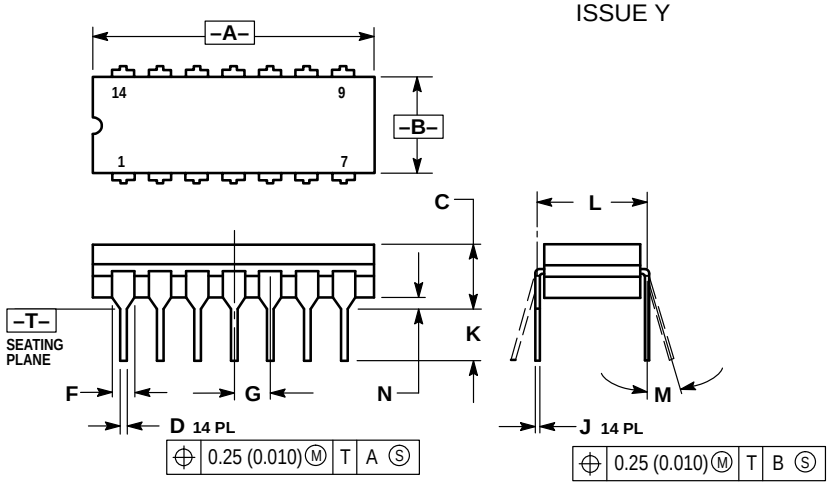

NOTES:
1. DIMENSIONING AND TOLERANCING PER ANSI Y14.5M, 1982.
2. CONTROLLING DIMENSION: INCH.
3. DIMENSION L TO CENTER OF LEAD WHEN FORMED PARALLEL.
4. DIMENSION F MAY NARROW TO 0.76 (0.030) WHERE THE LEAD ENTERS THE CERAMIC BODY.

	INCHES		MILLIMETERS	
DIM	MIN	MAX	MIN	MAX
A	0.750	0.785	19.05	19.94
B	0.245	0.280	6.23	7.11
C	0.155	0.200	3.94	5.08
D	0.015	0.020	0.39	0.50
F	0.055	0.065	1.40	1.65
G	0.100 BSC		2.54 BSC	
J	0.008	0.015	0.21	0.38
K	0.125	0.170	3.18	4.31
L	0.300 BSC		7.62 BSC	
M	0°	15°	0°	15°
N	0.020	0.040	0.51	1.01

P SUFFIX
PLASTIC DIP PACKAGE
CASE 646–06
ISSUE L

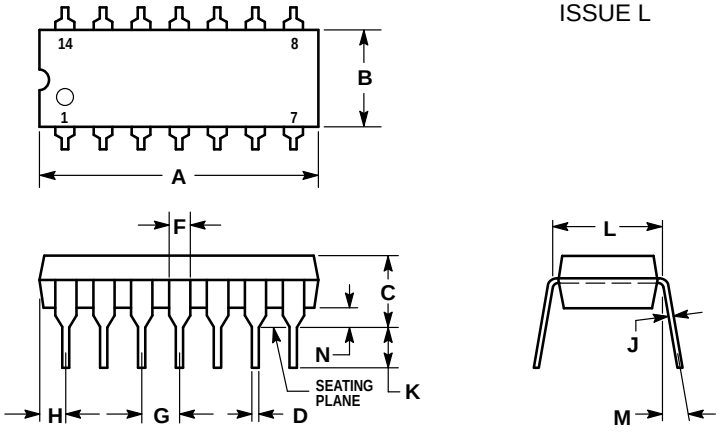

NOTES:
1. LEADS WITHIN 0.13 (0.005) RADIUS OF TRUE POSITION AT SEATING PLANE AT MAXIMUM MATERIAL CONDITION.
2. DIMENSION L TO CENTER OF LEADS WHEN FORMED PARALLEL.
3. DIMENSION B DOES NOT INCLUDE MOLD FLASH.
4. ROUNDED CORNERS OPTIONAL.

	INCHES		MILLIMETERS	
DIM	MIN	MAX	MIN	MAX
A	0.715	0.770	18.16	19.56
B	0.240	0.260	6.10	6.60
C	0.145	0.185	3.69	4.69
D	0.015	0.021	0.38	0.53
F	0.040	0.070	1.02	1.78
G	0.100 BSC		2.54 BSC	
H	0.052	0.095	1.32	2.41
J	0.008	0.015	0.20	0.38
K	0.115	0.135	2.92	3.43
L	0.300 BSC		7.62 BSC	
M	0°	10°	0°	10°
N	0.015	0.039	0.39	1.01

OUTLINE DIMENSIONS

D SUFFIX
PLASTIC SOIC PACKAGE
CASE 751A–03
ISSUE F

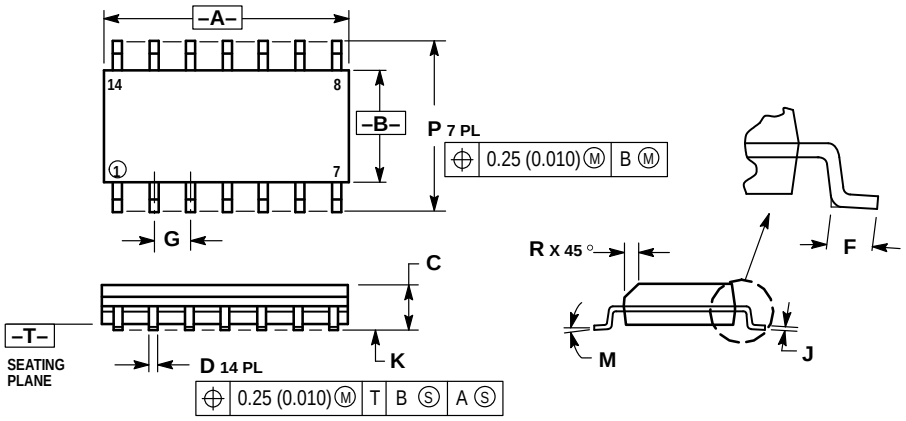

NOTES:
1. DIMENSIONING AND TOLERANCING PER ANSI Y14.5M, 1982.
2. CONTROLLING DIMENSION: MILLIMETER.
3. DIMENSIONS A AND B DO NOT INCLUDE MOLD PROTRUSION.
4. MAXIMUM MOLD PROTRUSION 0.15 (0.006) PER SIDE.
5. DIMENSION D DOES NOT INCLUDE DAMBAR PROTRUSION. ALLOWABLE DAMBAR PROTRUSION SHALL BE 0.127 (0.005) TOTAL IN EXCESS OF THE D DIMENSION AT MAXIMUM MATERIAL CONDITION.

	MILLIMETERS		INCHES	
DIM	MIN	MAX	MIN	MAX
A	8.55	8.75	0.337	0.344
B	3.80	4.00	0.150	0.157
C	1.35	1.75	0.054	0.068
D	0.35	0.49	0.014	0.019
F	0.40	1.25	0.016	0.049
G	1.27 BSC		0.050 BSC	
J	0.19	0.25	0.008	0.009
K	0.10	0.25	0.004	0.009
M	0 °	7 °	0 °	7 °
P	5.80	6.20	0.228	0.244
R	0.25	0.50	0.010	0.019

Motorola reserves the right to make changes without further notice to any products herein. Motorola makes no warranty, representation or guarantee regarding the suitability of its products for any particular purpose, nor does Motorola assume any liability arising out of the application or use of any product or circuit, and specifically disclaims any and all liability, including without limitation consequential or incidental damages. “Typical” parameters which may be provided in Motorola data sheets and/or specifications can and do vary in different applications and actual performance may vary over time. All operating parameters, including “Typicals” must be validated for each customer application by customer’s technical experts. Motorola does not convey any license under its patent rights nor the rights of others. Motorola products are not designed, intended, or authorized for use as components in systems intended for surgical implant into the body, or other applications intended to support or sustain life, or for any other application in which the failure of the Motorola product could create a situation where personal injury or death may occur. Should Buyer purchase or use Motorola products for any such unintended or unauthorized application, Buyer shall indemnify and hold Motorola and its officers, employees, subsidiaries, affiliates, and distributors harmless against all claims, costs, damages, and expenses, and reasonable attorney fees arising out of, directly or indirectly, any claim of personal injury or death associated with such unintended or unauthorized use, even if such claim alleges that Motorola was negligent regarding the design or manufacture of the part. Motorola and M are registered trademarks of Motorola, Inc. Motorola, Inc. is an Equal Opportunity/Affirmative Action Employer.

How to reach us:
USA/EUROPE/Locations Not Listed: Motorola Literature Distribution;
P.O. Box 20912; Phoenix, Arizona 85036. 1–800–441–2447 or 602–303–5454

MFAX: RMFAX0@email.sps.mot.com – TOUCHTONE 602–244–6609
INTERNET: http://Design–NET.com

JAPAN: Nippon Motorola Ltd.; Tatsumi–SPD–JLDC, 6F Seibu–Butsuryu–Center, 3–14–2 Tatsumi Koto–Ku, Tokyo 135, Japan. 03–81–3521–8315

ASIA/PACIFIC: Motorola Semiconductors H.K. Ltd.; 8B Tai Ping Industrial Park, 51 Ting Kok Road, Tai Po, N.T., Hong Kong. 852–26629298

ENTEGRECİ

Bu belge www.entegreci.com üzerinden sunulmaktadır.

Elektronik komponent tedarikinde Entegreci

Entegreci, Eskişehir merkezli, Türkiye geneline satış yapan bir elektronik komponent mağazasıdır. Entegreler (IC), mikrodenetleyiciler, transistörler, diyotlar, pasif elemanlar, konnektörler, modüller ve geliştirme kartları tek adetten seri üretim adetlerine kadar satılır. Ürün sayfalarında güncel stok durumunu, fiyatı ve datasheet bağlantısını bulabilirsiniz.

Parça koduyla arama

Üretici parça numarasını yazın; stok ve fiyatı hemen görün.

www.entegreci.com

Ürün kategorileri

Entegreden kapasitöre tüm elektronik komponent kategorileri.

Kategorilere göz atın

Üreticiler

Aradığınız üreticinin ürünlerini tek sayfada inceleyin.

Üreticileri görün

Toplu alım ve teklif

Listede olmayan ya da yüksek adetli parçalar için teklif isteyin.

Teklif isteyin

www.entegreci.com | **destek@entegreci.com** | **0850 305 90 34**

Entegreci is an online electronic components store based in Türkiye. Search by manufacturer part number to see stock, prices and datasheets for integrated circuits, microcontrollers, transistors, passive components and connectors, or request a quote for parts that are not listed.

Bu sayfa Entegreci tarafından eklenmiştir. Belgenin önceki sayfaları asıl yayıncısına aittir ve içeriği değiştirilmemiştir; en güncel sürüm için belgenin yayıncısına başvurun.