LM723/LM723C Voltage Regulator

Check for Samples: LM723, LM723C

FEATURES

- **150 mA Output Current Without External Pass Transistor**
- **Output Currents in Excess of 10A Possible by Adding External Transistors**
- **Input Voltage 40V Max**
- **Output Voltage Adjustable from 2V to 37V**
- **Can be Used as Either a Linear or a Switching Regulator**

DESCRIPTION

The LM723/LM723C is a voltage regulator designed primarily for series regulator applications. By itself, it will supply output currents up to 150 mA; but external transistors can be added to provide any desired load current. The circuit features extremely low standby current drain, and provision is made for either linear or foldback current limiting.

The LM723/LM723C is also useful in a wide range of other applications such as a shunt regulator, a current regulator or a temperature controller.

The LM723C is identical to the LM723 except that the LM723C has its performance ensured over a 0°C to +70°C temperature range, instead of −55°C to +125°C.

Connection Diagram

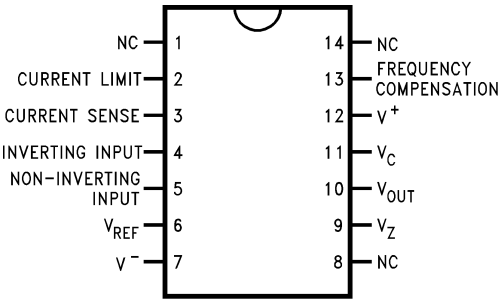

Figure 1. Top View
CDIP Package or PDIP Package
See Package J or NFF0014A

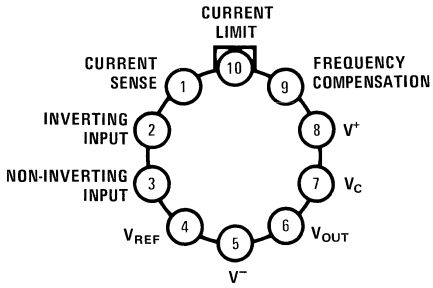

Note: Pin 5 connected to case.

Figure 2. Top View
TO-100
See Package LME

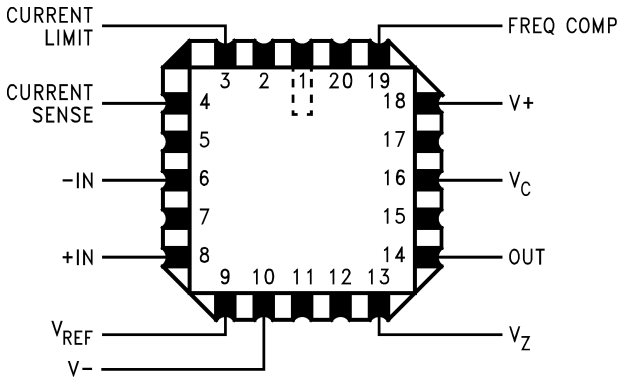

Figure 3. Top View
See Package NAJ0020A

Please be aware that an important notice concerning availability, standard warranty, and use in critical applications of Texas Instruments semiconductor products and disclaimers thereto appears at the end of this data sheet.

All trademarks are the property of their respective owners.

PRODUCTION DATA information is current as of publication date. Products conform to specifications per the terms of the Texas Instruments standard warranty. Production processing does not necessarily include testing of all parameters.

Copyright © 1999–2013, Texas Instruments Incorporated

Equivalent Circuit*

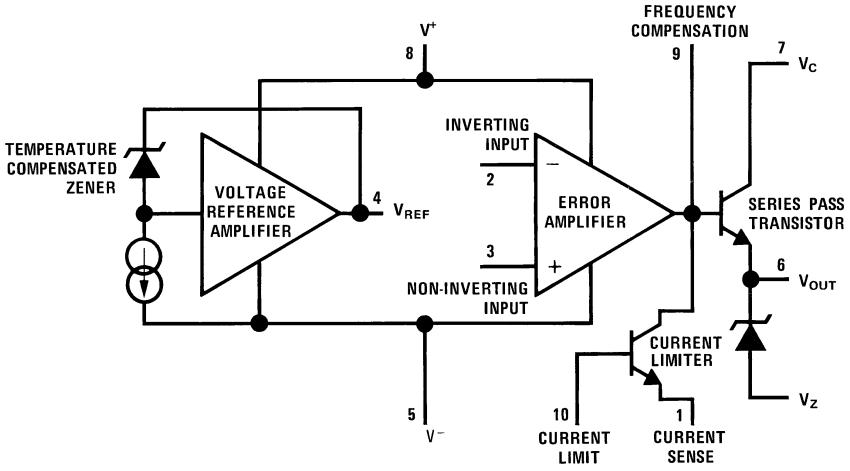

*Pin numbers refer to metal can package.

Typical Application

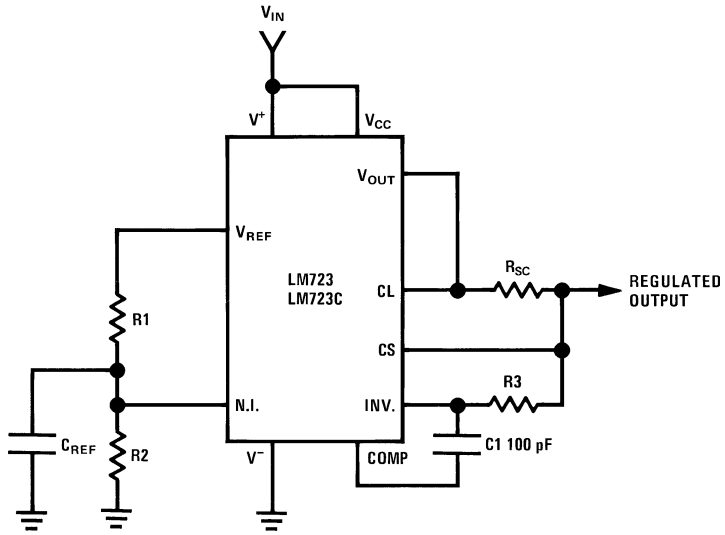

Note: $R3 = \frac{R1\,R2}{R1 + R2}$
for minimum temperature drift.

Typical Performance

Regulated Output Voltage	5V
Line Regulation (ΔV_{IN} = 3V)	0.5mV
Load Regulation (ΔI_L = 50 mA)	1.5mV

Figure 4. Basic Low Voltage Regulator (V_{OUT} = 2 to 7 Volts)

Copyright © 1999–2013, Texas Instruments Incorporated

These devices have limited built-in ESD protection. The leads should be shorted together or the device placed in conductive foam during storage or handling to prevent electrostatic damage to the MOS gates.

ABSOLUTE MAXIMUM RATINGS(1)(2)

Pulse Voltage from V^+ to V^- (50 ms)	50V
Continuous Voltage from V^+ to V^-	40V
Input-Output Voltage Differential	40V
Maximum Amplifier Input Voltage (Either Input)	8.5V
Maximum Amplifier Input Voltage (Differential)	5V
Current from V_Z	25 mA
Current from V_{REF}	15 mA
Internal Power Dissipation Metal Can (3)	800 mW
CDIP (3)	900 mW
PDIP (3)	660 mW
Operating Temperature Range	
LM723	−55°C to +150°C
LM723C	0°C to +70°C
Storage Temperature Range Metal Can	−65°C to +150°C
PDIP	−55°C to +150°C
Lead Temperature (Soldering, 4 sec. max.)	
Hermetic Package	300°C
Plastic Package	260°C
ESD Tolerance	1200V
(Human body model, 1.5 kΩ in series with 100 pF)	

(1) "Absolute Maximum Ratings" indicate limits beyond which damage to the device may occur. Operating Ratings indicate conditions for which the device is functional, but do not ensure specific performance limits.
(2) A military RETS specification is available on request. At the time of printing, the LM723 RETS specification complied with the Min and Max limits in this table. The LM723E, H, and J may also be procured as a Standard Military Drawing.
(3) See derating curves for maximum power rating above 25°C.

ELECTRICAL CHARACTERISTICS(1)(2)(3)(4)

Parameter	Conditions	LM723			LM723C			Units
		Min	Typ	Max	Min	Typ	Max	
Line Regulation	V_{IN} = 12V to V_{IN} = 15V		0.01	0.1		0.01	0.1	% V_{OUT}
	−55°C ≤ T_A ≤ +125°C			0.3				% V_{OUT}
	0°C ≤ T_A ≤ +70°C						0.3	% V_{OUT}
	V_{IN} = 12V to V_{IN} = 40V		0.02	0.2		0.1	0.5	% V_{OUT}
Load Regulation	I_L = 1 mA to I_L = 50 mA		0.03	0.15		0.03	0.2	% V_{OUT}
	−55°C ≤ T_A ≤ +125°C			0.6				% V_{OUT}
	0°C ≤ T_A ≤ +70°C						0.6	% V_{OUT}
Ripple Rejection	f = 50 Hz to 10 kHz, C_{REF} = 0		74			74		dB
	f = 50 Hz to 10 kHz, C_{REF} = 5 µF		86			86		dB

(1) Unless otherwise specified, T_A = 25°C, V_{IN} = V^+ = V_C = 12V, V^- = 0, V_{OUT} = 5V, I_L = 1 mA, R_{SC} = 0, C_1 = 100 pF, C_{REF} = 0 and divider impedance as seen by error amplifier ≤ 10 kΩ connected as shown in Figure 4. Line and load regulation specifications are given for the condition of constant chip temperature. Temperature drifts must be taken into account separately for high dissipation conditions.
(2) A military RETS specification is available on request. At the time of printing, the LM723 RETS specification complied with the Min and Max limits in this table. The LM723E, H, and J may also be procured as a Standard Military Drawing.
(3) Specified by correlation to other tests.
(4) L_1 is 40 turns of No. 20 enameled copper wire wound on Ferroxcube P36/22-3B7 pot core or equivalent with 0.009 in. air gap.

Copyright © 1999–2013, Texas Instruments Incorporated

ELECTRICAL CHARACTERISTICS[1][2][3][4] (continued)

Parameter	Conditions	LM723			LM723C			Units
		Min	Typ	Max	Min	Typ	Max	
Average Temperature Coefficient of Output Voltage ([5])	−55°C ≤ T_A ≤ +125°C		0.002	0.015				%/°C
	0°C ≤ T_A ≤ +70°C					0.003	0.015	%/°C
Short Circuit Current Limit	R_{SC} = 10Ω, V_{OUT} = 0		65			65		mA
Reference Voltage		6.95	7.15	7.35	6.80	7.15	7.50	V
Output Noise Voltage	BW = 100 Hz to 10 kHz, C_{REF} = 0		86			86		µVrms
	BW = 100 Hz to 10 kHz, C_{REF} = 5 µF		2.5			2.5		µVrms
Long Term Stability			0.05			0.05		%/1000 hrs
Standby Current Drain	I_L = 0, V_{IN} = 30V		1.7	3.5		1.7	4.0	mA
Input Voltage Range		9.5		40	9.5		40	V
Output Voltage Range		2.0		37	2.0		37	V
Input-Output Voltage Differential		3.0		38	3.0		38	V
θ_{JA}	PDIP					105		°C/W
θ_{JA}	CDIP		150					°C/W
θ_{JA}	H10C Board Mount in Still Air		165			165		°C/W
θ_{JA}	H10C Board Mount in 400 LF/Min Air Flow		66			66		°C/W
θ_{JC}			22			22		°C/W

(5) For metal can applications where V_Z is required, an external 6.2V zener diode should be connected in series with V_{OUT}.

Copyright © 1999–2013, Texas Instruments Incorporated

TYPICAL PERFORMANCE CHARACTERISTICS

Load Regulation Characteristics with Current Limiting

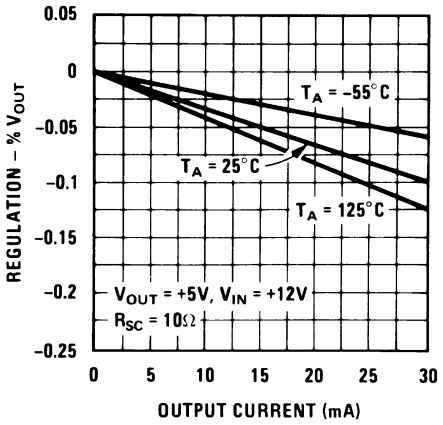

Figure 5.

Load Regulation Characteristics with Current Limiting

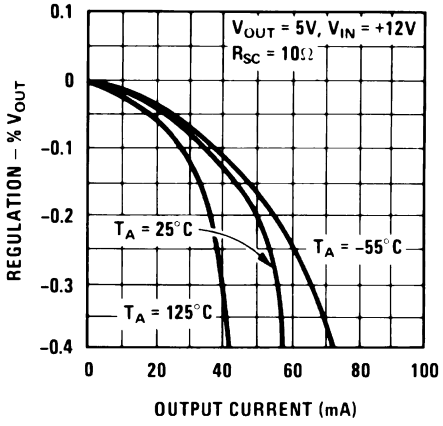

Figure 6.

Load & Line Regulation vs Input-Output Voltage Differential

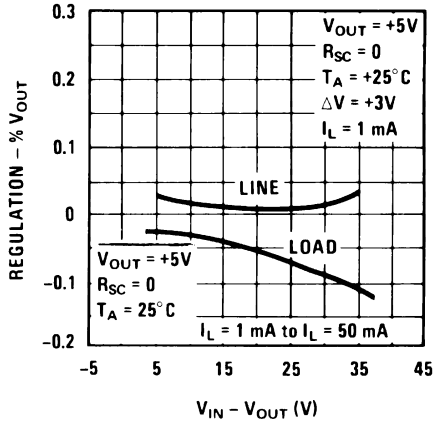

Figure 7.

Current Limiting Characteristics

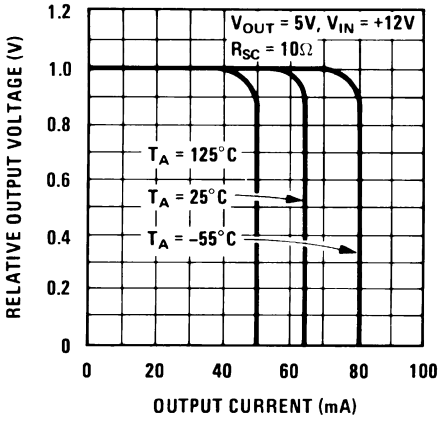

Figure 8.

Current Limiting Characteristics vs Junction Temperature

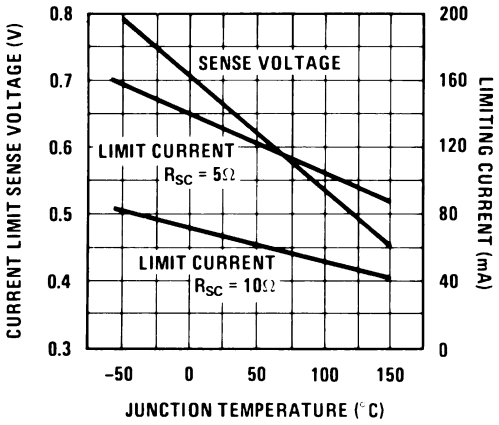

Figure 9.

Standby Current Drain vs Input Voltage

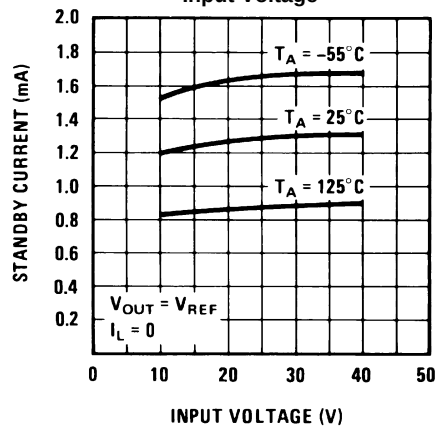

Figure 10.

Copyright © 1999–2013, Texas Instruments Incorporated

TYPICAL PERFORMANCE CHARACTERISTICS (continued)

Line Transient Response

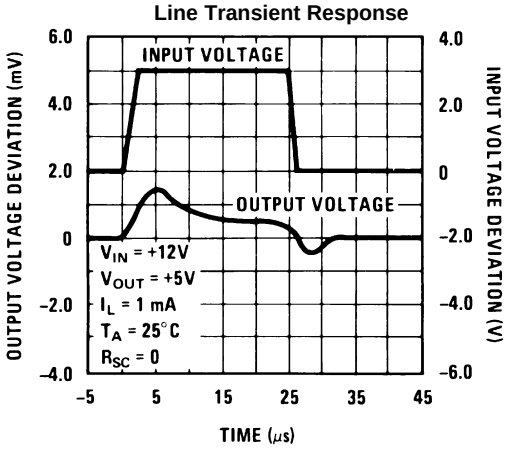

Figure 11.

Load Transient Response

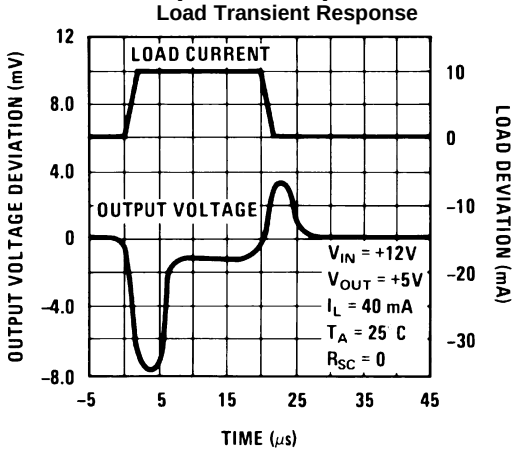

Figure 12.

Output Impedence vs Frequency

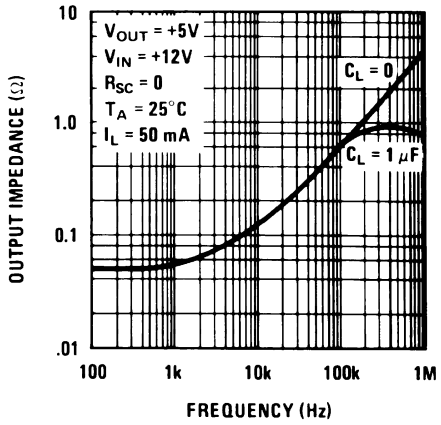

Figure 13.

Copyright © 1999–2013, Texas Instruments Incorporated

MAXIMUM POWER RATINGS

Noise vs Filter Capacitor (C_{REF} in Circuit of Figure 4) (Bandwidth 100 Hz to 10 kHz)

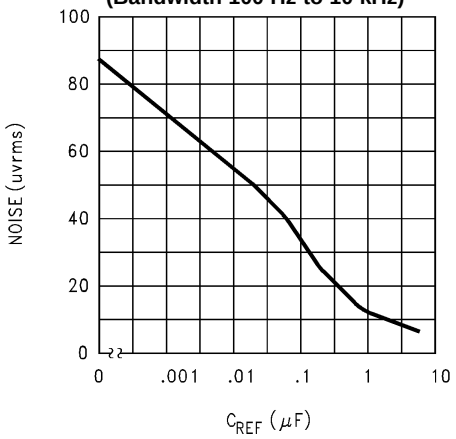

Figure 14.

LM723 Power Dissipation vs Ambient Temperature

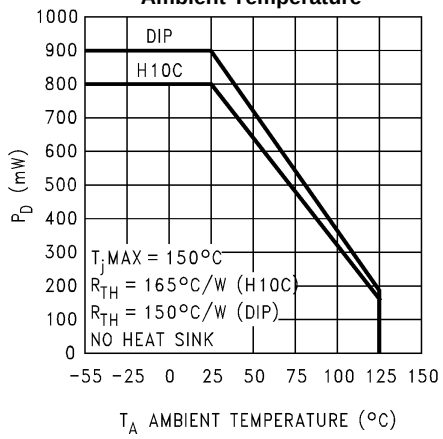

Figure 15.

LM723C Power Dissipation vs Ambient Temperature

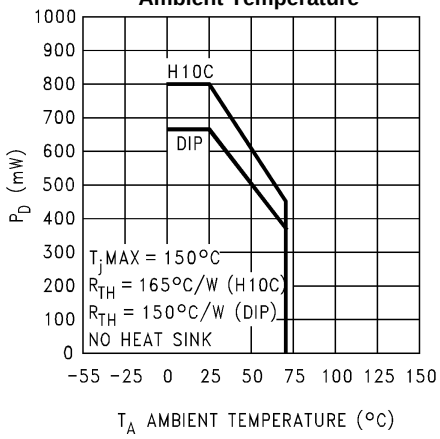

Figure 16.

Copyright © 1999–2013, Texas Instruments Incorporated

Table 1. Resistor Values (kΩ) for Standard Output Voltage

Positive Output Voltage	Applicable Figures	Fixed Output ±5%		Output Adjustable ±10%(1)			Negative Output Voltage	Applicable Figures	Fixed Output ±5%		5% Output Adjustable ±10%		
	See(2)	R1	R2	R1	P1	R2			R1	R2	R1	P1	R2
+3.0	Figure 4, Figure 19, Figure 21, Figure 24, Figure 27 (Figure 19)	4.12	3.01	1.8	0.5	1.2	+100	Figure 22	3.57	102	2.2	10	91
+3.6	Figure 4, Figure 19, Figure 21, Figure 24, Figure 27 (Figure 19)	3.57	3.65	1.5	0.5	1.5	+250	Figure 22	3.57	255	2.2	10	240
+5.0	Figure 4, Figure 19, Figure 21, Figure 24, Figure 27 (Figure 19)	2.15	4.99	0.75	0.5	2.2	−6(3)	Figure 18, (Figure 25)	3.57	2.43	1.2	0.5	0.75
+6.0	Figure 4, Figure 19, Figure 21, Figure 24, Figure 27 (Figure 19)	1.15	6.04	0.5	0.5	2.7	−9	Figure 18, Figure 25	3.48	5.36	1.2	0.5	2.0
+9.0	Figure 17, Figure 19, (Figure 19, Figure 21, Figure 24, Figure 27)	1.87	7.15	0.75	1.0	2.7	−12	Figure 18, Figure 25	3.57	8.45	1.2	0.5	3.3
+12	Figure 17, Figure 19, (Figure 19, Figure 21, Figure 24, Figure 27)	4.87	7.15	2.0	1.0	3.0	−15	Figure 18, Figure 25	3.65	11.5	1.2	0.5	4.3
+15	Figure 17, Figure 19, (Figure 19, Figure 21, Figure 24, Figure 27)	7.87	7.15	3.3	1.0	3.0	−28	Figure 18, Figure 25	3.57	24.3	1.2	0.5	10
+28	Figure 17, Figure 19, (Figure 19, Figure 21, Figure 24, Figure 27)	21.0	7.15	5.6	1.0	2.0	−45	Figure 23	3.57	41.2	2.2	10	33
+45	Figure 22	3.57	48.7	2.2	10	39	−100	Figure 23	3.57	97.6	2.2	10	91
+75	Figure 22	3.57	78.7	2.2	10	68	−250	Figure 23	3.57	249	2.2	10	240

(1) Replace R1/R2 in figures with divider shown in Figure 28.
(2) Figures in parentheses may be used if R1/R2 divider is placed on opposite input of error amp.
(3) V^+ and V_{CC} must be connected to a +3V or greater supply.

Table 2. Formulae for Intermediate Output Voltages

Outputs from +2 to +7 volts	Outputs from +4 to +250 volts	Current Limiting
(Figure 4 Figure 19 Figure 20 Figure 21 Figure 24 Figure 27	(Figure 22)	
$V_{OUT} = \left(V_{REF} \times \frac{R2}{R1 + R2}\right)$	$V_{OUT} = \left(\frac{V_{REF}}{2} \times \frac{R2 - R1}{R1}\right)$; R3 = R4	$I_{LIMIT} = \frac{V_{SENSE}}{R_{SC}}$
Outputs from +7 to +37 volts	**Outputs from −6 to −250 volts**	**Foldback Current Limiting**
(Figure 17 Figure 19 Figure 20 Figure 21 Figure 24 Figure 27)	(Figure 18 Figure 23 Figure 25)	$I_{KNEE} = \left(\frac{V_{OUT}\,R3}{R_{SC}\,R4} + \frac{V_{SENSE}\,(R3 + R4)}{R_{SC}\,R4}\right)$
$V_{OUT} = \left(V_{REF} \times \frac{R1 + R2}{R2}\right)$	$V_{OUT} = \left(\frac{V_{REF}}{2} \times \frac{R1 + R2}{R1}\right)$; R3 = R4	$I_{SHORT\ CKT} = \left(\frac{V_{SENSE}}{R_{SC}} \times \frac{R3 + R4}{R4}\right)$

Copyright © 1999–2013, Texas Instruments Incorporated

TYPICAL APPLICATIONS

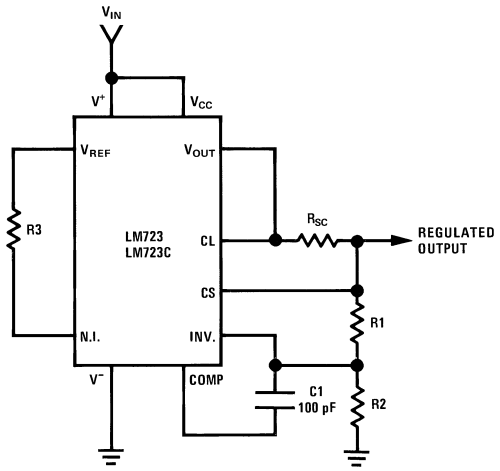

Note: $R3 = \frac{R1\,R2}{R1 + R2}$
for minimum temperature drift.
R3 may be eliminated for minimum component count.

Typical Performance

Regulated Output Voltage	15V
Line Regulation (ΔV_{IN} = 3V)	1.5 mV
Load Regulation (ΔI_L = 50 mA)	4.5 mV

Figure 17. Basic High Voltage Regulator (V_{OUT} = 7 to 37 Volts)

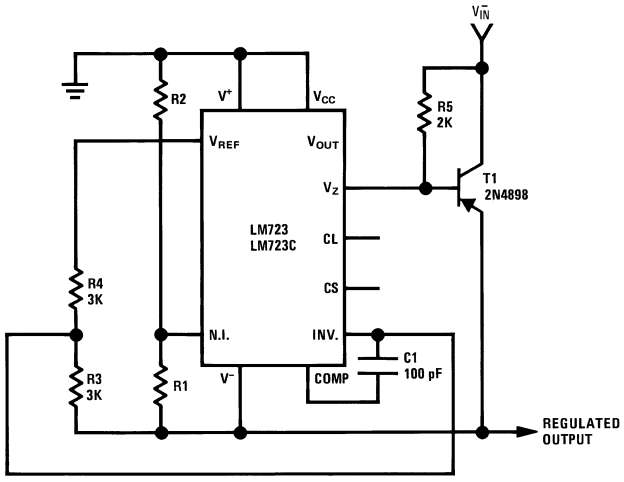

Typical Performance

Regulated Output Voltage	−15V
Line Regulation (ΔV_{IN} = 3V)	1 mV
Load Regulation (ΔI_L = 100 mA)	2 mV

Figure 18. Negative Voltage Regulator

Copyright © 1999–2013, Texas Instruments Incorporated

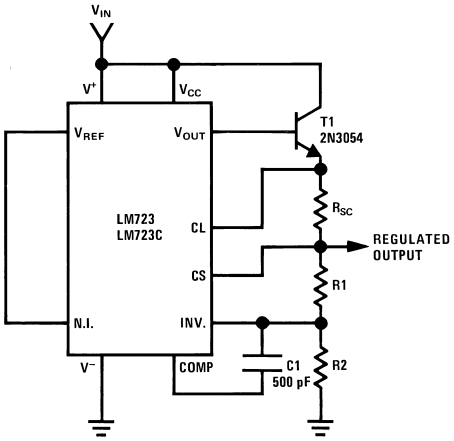

Typical Performance

Regulated Output Voltage	+15V
Line Regulation (ΔV_{IN} = 3V)	1.5 mV
Load Regulation (ΔI_L = 1A)	15 mV

Figure 19. Positive Voltage Regulator (External NPN Pass Transistor)

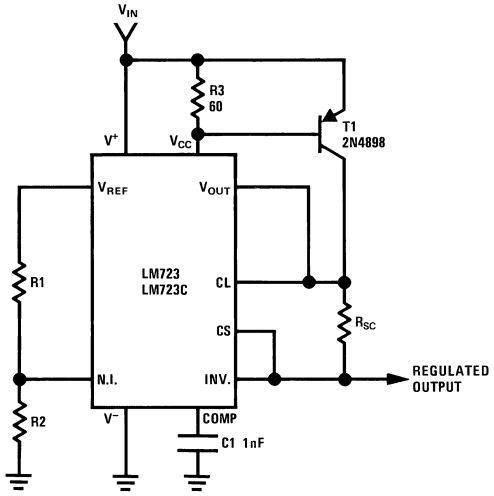

Typical Performance

Regulated Output Voltage	+5V
Line Regulation (ΔV_{IN} = 3V)	0.5 mV
Load Regulation (ΔI_L = 1A)	5 mV

Figure 20. Positive Voltage Regulator (External PNP Pass Transistor)

Copyright © 1999–2013, Texas Instruments Incorporated

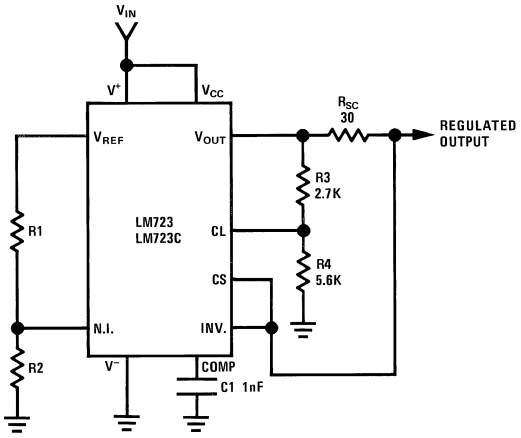

Typical Performance

Regulated Output Voltage	+5V
Line Regulation (ΔV_{IN} = 3V)	0.5 mV
Load Regulation (ΔI_L = 10 mA)	1 mV
Short Circuit Current	20 mA

Figure 21. Foldback Current Limiting

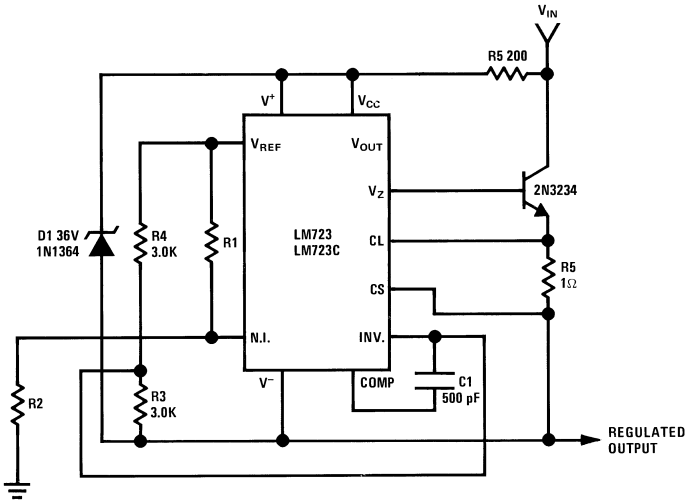

Typical Performance

Regulated Output Voltage	+50V
Line Regulation (ΔV_{IN} = 20V)	15 mV
Load Regulation (ΔI_L = 50 mA)	20 mV

Figure 22. Positive Floating Regulator

Copyright © 1999–2013, Texas Instruments Incorporated

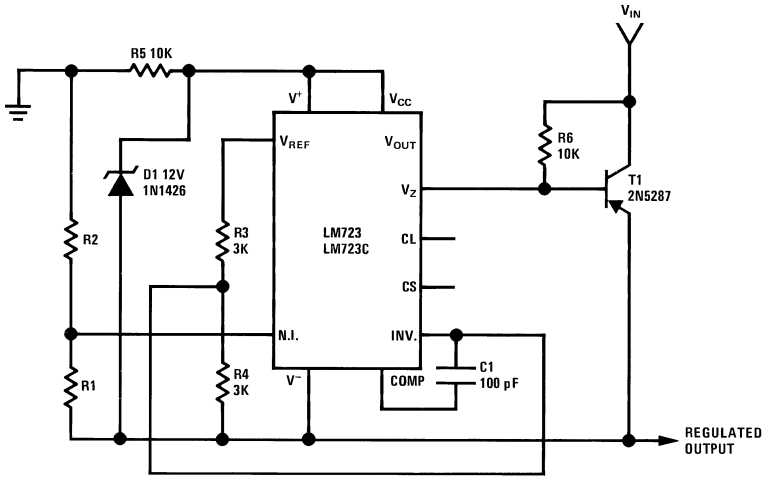

Typical Performance

Regulated Output Voltage	−100V
Line Regulation (ΔV_{IN} = 20V)	30 mV
Load Regulation (ΔI_L = 100 mA)	20 mV

Figure 23. Negative Floating Regulator

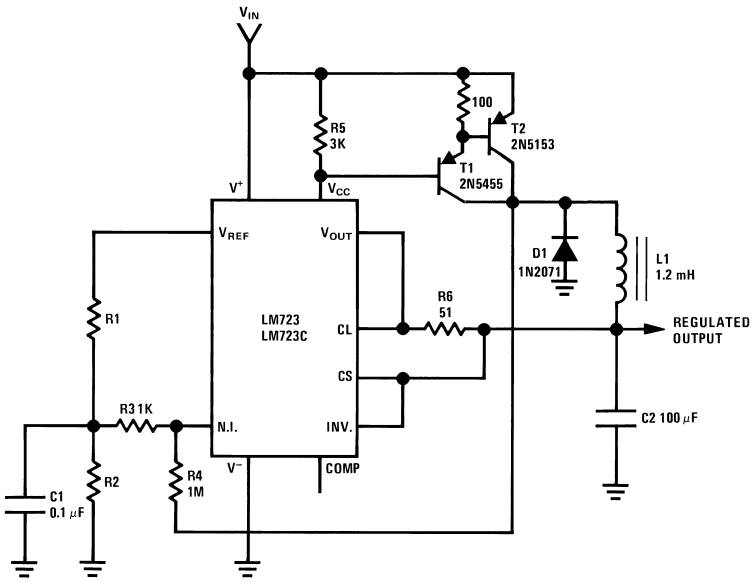

Typical Performance

Regulated Output Voltage	+5V
Line Regulation (ΔV_{IN} = 30V)	10 mV
Load Regulation (ΔI_L = 2A)	80 mV

Figure 24. Positive Switching Regulator

Copyright © 1999–2013, Texas Instruments Incorporated

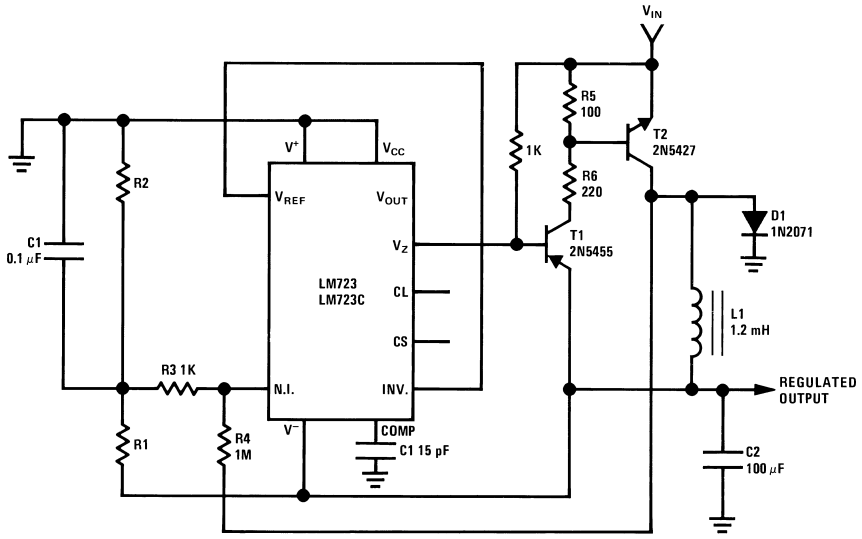

Typical Performance

Regulated Output Voltage	−15V
Line Regulation (ΔV_{IN} = 20V)	8 mV
Load Regulation (ΔI_L = 2A)	6 mV

Figure 25. Negative Switching Regulator

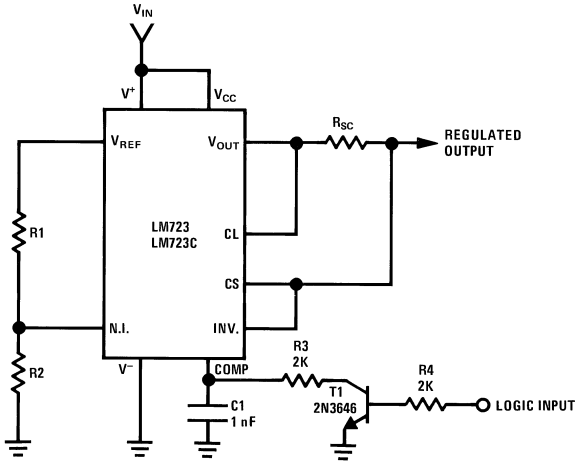

Note: Current limit transistor may be used for shutdown if current limiting is not required.

Typical Performance

Regulated Output Voltage	+5V
Line Regulation (ΔV_{IN} = 3V)	0.5 mV
Load Regulation (ΔI_L = 50 mA)	1.5 mV

Figure 26. Remote Shutdown Regulator with Current Limiting

Copyright © 1999–2013, Texas Instruments Incorporated

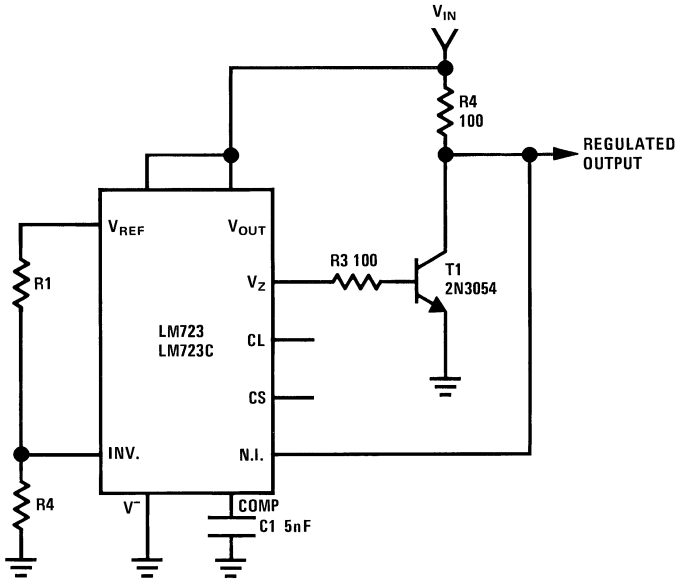

Regulated Output Voltage	+5V
Line Regulation (ΔV_{IN} = 10V)	0.5 mV
Load Regulation (ΔI_L = 100 mA)	1.5 mV

Figure 27. Shunt Regulator

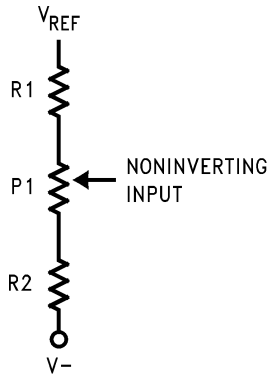

Figure 28. Output Voltage Adjust (1)

(1) Replace R1/R2 in figures with divider shown in Figure 28.

Copyright © 1999–2013, Texas Instruments Incorporated

Schematic Diagram

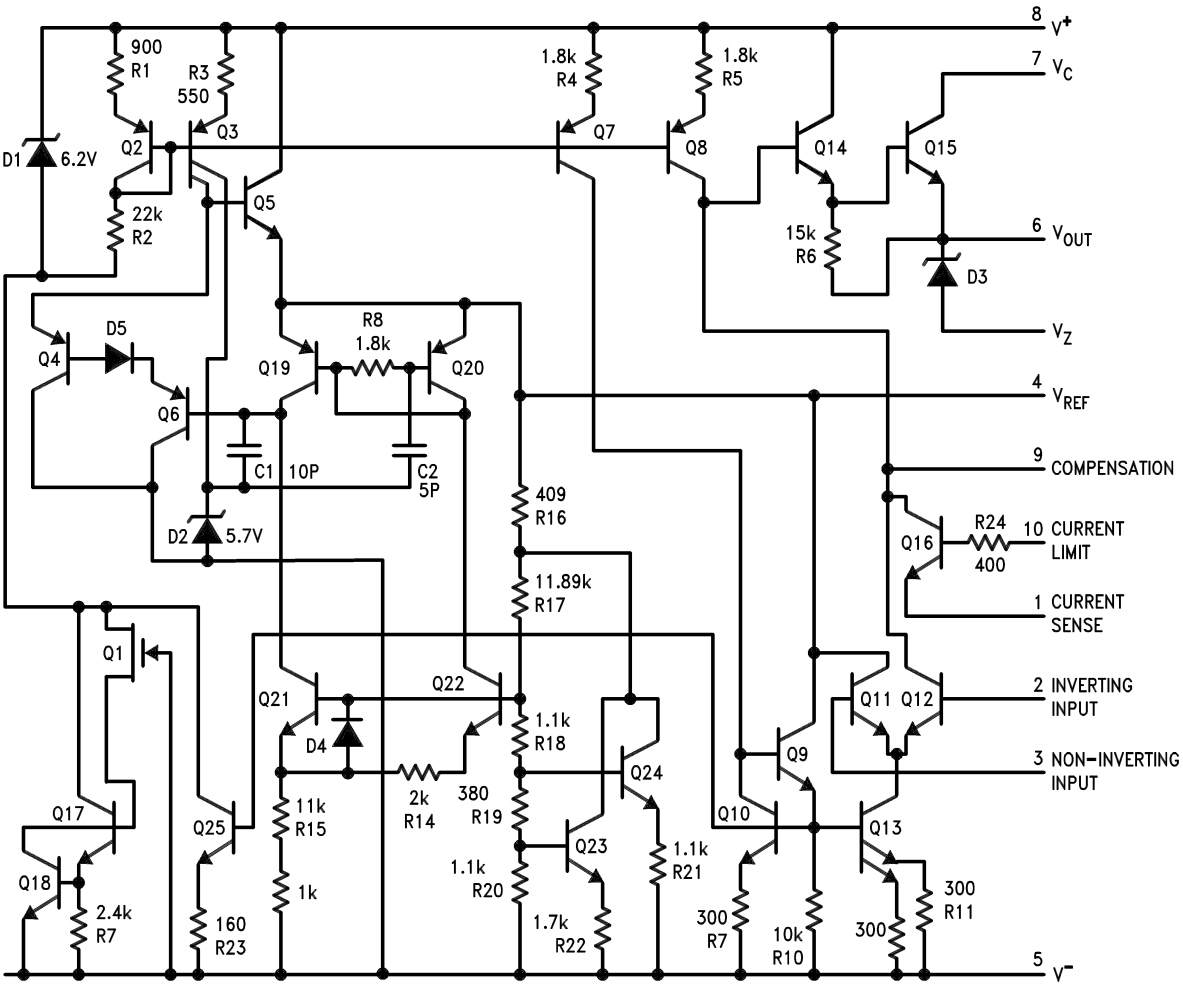

REVISION HISTORY

Changes from Revision B (April 2013) to Revision C	Page
• Changed layout of National Data Sheet to TI format	15

Copyright © 1999–2013, Texas Instruments Incorporated

PACKAGING INFORMATION

Orderable Device	Status (1)	Package Type	Package Drawing	Pins	Package Qty	Eco Plan (2)	Lead/Ball Finish (6)	MSL Peak Temp (3)	Op Temp (°C)	Device Marking (4/5)	Samples
LM723CH	ACTIVE	TO-100	LME	10	500	TBD	Call TI	Call TI	0 to 70	(LM723CH ~ LM723CH)	Samples
LM723CH/NOPB	ACTIVE	TO-100	LME	10	500	Green (RoHS & no Sb/Br)	Call TI	Level-1-NA-UNLIM	0 to 70	(LM723CH ~ LM723CH)	Samples
LM723CN	LIFEBUY	PDIP	NFF	14		TBD	Call TI	Call TI	0 to 70	LM723CN	
LM723CN/NOPB	ACTIVE	PDIP	NFF	14	25	Green (RoHS & no Sb/Br)	CU SN	Level-1-NA-UNLIM	0 to 70	LM723CN	Samples
LM723H	ACTIVE	TO-100	LME	10	500	TBD	Call TI	Call TI	-55 to 150	(LM723H ~ LM723H)	Samples
LM723H/NOPB	ACTIVE	TO-100	LME	10	500	Green (RoHS & no Sb/Br)	Call TI	Level-1-NA-UNLIM	-55 to 150	(LM723H ~ LM723H)	Samples

(1) The marketing status values are defined as follows:
ACTIVE: Product device recommended for new designs.
LIFEBUY: TI has announced that the device will be discontinued, and a lifetime-buy period is in effect.
NRND: Not recommended for new designs. Device is in production to support existing customers, but TI does not recommend using this part in a new design.
PREVIEW: Device has been announced but is not in production. Samples may or may not be available.
OBSOLETE: TI has discontinued the production of the device.

(2) Eco Plan - The planned eco-friendly classification: Pb-Free (RoHS), Pb-Free (RoHS Exempt), or Green (RoHS & no Sb/Br) - please check http://www.ti.com/productcontent for the latest availability information and additional product content details.
TBD: The Pb-Free/Green conversion plan has not been defined.
Pb-Free (RoHS): TI's terms "Lead-Free" or "Pb-Free" mean semiconductor products that are compatible with the current RoHS requirements for all 6 substances, including the requirement that lead not exceed 0.1% by weight in homogeneous materials. Where designed to be soldered at high temperatures, TI Pb-Free products are suitable for use in specified lead-free processes.
Pb-Free (RoHS Exempt): This component has a RoHS exemption for either 1) lead-based flip-chip solder bumps used between the die and package, or 2) lead-based die adhesive used between the die and leadframe. The component is otherwise considered Pb-Free (RoHS compatible) as defined above.
Green (RoHS & no Sb/Br): TI defines "Green" to mean Pb-Free (RoHS compatible), and free of Bromine (Br) and Antimony (Sb) based flame retardants (Br or Sb do not exceed 0.1% by weight in homogeneous material)

(3) MSL, Peak Temp. - The Moisture Sensitivity Level rating according to the JEDEC industry standard classifications, and peak solder temperature.

(4) There may be additional marking, which relates to the logo, the lot trace code information, or the environmental category on the device.

(5) Multiple Device Markings will be inside parentheses. Only one Device Marking contained in parentheses and separated by a "~" will appear on a device. If a line is indented then it is a continuation of the previous line and the two combined represent the entire Device Marking for that device.

(6) Lead/Ball Finish - Orderable Devices may have multiple material finish options. Finish options are separated by a vertical ruled line. Lead/Ball Finish values may wrap to two lines if the finish value exceeds the maximum column width.

Important Information and Disclaimer: The information provided on this page represents TI's knowledge and belief as of the date that it is provided. TI bases its knowledge and belief on information provided by third parties, and makes no representation or warranty as to the accuracy of such information. Efforts are underway to better integrate information from third parties. TI has taken and continues to take reasonable steps to provide representative and accurate information but may not have conducted destructive testing or chemical analysis on incoming materials and chemicals. TI and TI suppliers consider certain information to be proprietary, and thus CAS numbers and other limited information may not be available for release.

In no event shall TI's liability arising out of such information exceed the total purchase price of the TI part(s) at issue in this document sold by TI to Customer on an annual basis.

LME (O–MBCY–W10) **METAL CYLINDRICAL PACKAGE**

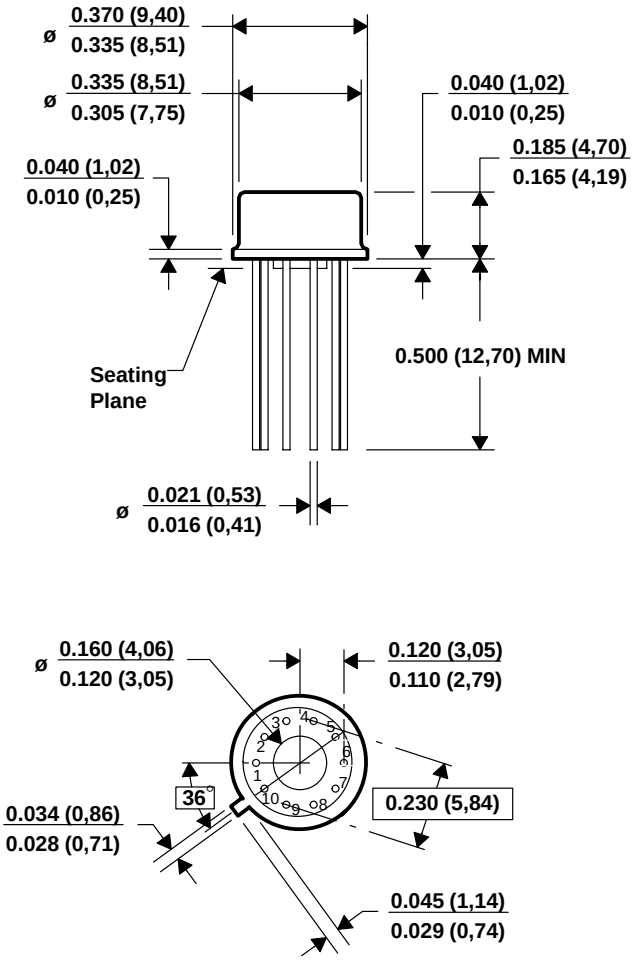

4202488/A 03/01

NOTES:
A. All linear dimensions are in inches (millimeters).
B. This drawing is subject to change without notice.
C. Leads in true position within 0.010 (0,25) R @ MMC at seating plane.
D. Pin numbers shown for reference only. Numbers may not be marked on package.
E. Falls within JEDEC MO–006/TO-100.

NFF0014A

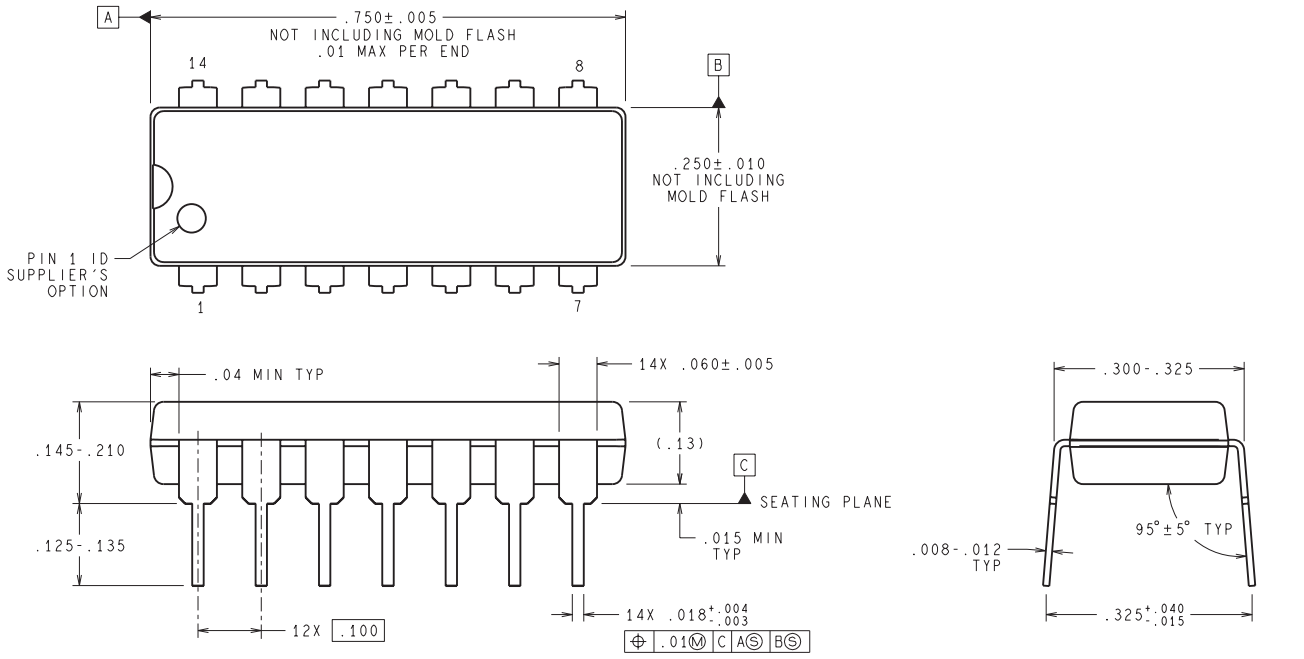

DIMENSIONS ARE IN INCHES
DIMENSIONS IN ( ) FOR REFERENCE ONLY

N14A (Rev G)

IMPORTANT NOTICE

Texas Instruments Incorporated and its subsidiaries (TI) reserve the right to make corrections, enhancements, improvements and other changes to its semiconductor products and services per JESD46, latest issue, and to discontinue any product or service per JESD48, latest issue. Buyers should obtain the latest relevant information before placing orders and should verify that such information is current and complete. All semiconductor products (also referred to herein as “components”) are sold subject to TI’s terms and conditions of sale supplied at the time of order acknowledgment.

TI warrants performance of its components to the specifications applicable at the time of sale, in accordance with the warranty in TI’s terms and conditions of sale of semiconductor products. Testing and other quality control techniques are used to the extent TI deems necessary to support this warranty. Except where mandated by applicable law, testing of all parameters of each component is not necessarily performed.

TI assumes no liability for applications assistance or the design of Buyers’ products. Buyers are responsible for their products and applications using TI components. To minimize the risks associated with Buyers’ products and applications, Buyers should provide adequate design and operating safeguards.

TI does not warrant or represent that any license, either express or implied, is granted under any patent right, copyright, mask work right, or other intellectual property right relating to any combination, machine, or process in which TI components or services are used. Information published by TI regarding third-party products or services does not constitute a license to use such products or services or a warranty or endorsement thereof. Use of such information may require a license from a third party under the patents or other intellectual property of the third party, or a license from TI under the patents or other intellectual property of TI.

Reproduction of significant portions of TI information in TI data books or data sheets is permissible only if reproduction is without alteration and is accompanied by all associated warranties, conditions, limitations, and notices. TI is not responsible or liable for such altered documentation. Information of third parties may be subject to additional restrictions.

Resale of TI components or services with statements different from or beyond the parameters stated by TI for that component or service voids all express and any implied warranties for the associated TI component or service and is an unfair and deceptive business practice. TI is not responsible or liable for any such statements.

Buyer acknowledges and agrees that it is solely responsible for compliance with all legal, regulatory and safety-related requirements concerning its products, and any use of TI components in its applications, notwithstanding any applications-related information or support that may be provided by TI. Buyer represents and agrees that it has all the necessary expertise to create and implement safeguards which anticipate dangerous consequences of failures, monitor failures and their consequences, lessen the likelihood of failures that might cause harm and take appropriate remedial actions. Buyer will fully indemnify TI and its representatives against any damages arising out of the use of any TI components in safety-critical applications.

In some cases, TI components may be promoted specifically to facilitate safety-related applications. With such components, TI’s goal is to help enable customers to design and create their own end-product solutions that meet applicable functional safety standards and requirements. Nonetheless, such components are subject to these terms.

No TI components are authorized for use in FDA Class III (or similar life-critical medical equipment) unless authorized officers of the parties have executed a special agreement specifically governing such use.

Only those TI components which TI has specifically designated as military grade or “enhanced plastic” are designed and intended for use in military/aerospace applications or environments. Buyer acknowledges and agrees that any military or aerospace use of TI components which have ***not*** been so designated is solely at the Buyer's risk, and that Buyer is solely responsible for compliance with all legal and regulatory requirements in connection with such use.

TI has specifically designated certain components as meeting ISO/TS16949 requirements, mainly for automotive use. In any case of use of non-designated products, TI will not be responsible for any failure to meet ISO/TS16949.

Products		**Applications**	
Audio	www.ti.com/audio	Automotive and Transportation	www.ti.com/automotive
Amplifiers	amplifier.ti.com	Communications and Telecom	www.ti.com/communications
Data Converters	dataconverter.ti.com	Computers and Peripherals	www.ti.com/computers
DLP® Products	www.dlp.com	Consumer Electronics	www.ti.com/consumer-apps
DSP	dsp.ti.com	Energy and Lighting	www.ti.com/energy
Clocks and Timers	www.ti.com/clocks	Industrial	www.ti.com/industrial
Interface	interface.ti.com	Medical	www.ti.com/medical
Logic	logic.ti.com	Security	www.ti.com/security
Power Mgmt	power.ti.com	Space, Avionics and Defense	www.ti.com/space-avionics-defense
Microcontrollers	microcontroller.ti.com	Video and Imaging	www.ti.com/video
RFID	www.ti-rfid.com		
OMAP Applications Processors	www.ti.com/omap	**TI E2E Community**	e2e.ti.com
Wireless Connectivity	www.ti.com/wirelessconnectivity		

Mailing Address: Texas Instruments, Post Office Box 655303, Dallas, Texas 75265
Copyright © 2015, Texas Instruments Incorporated

ENTEGRECİ

Bu belge www.entegreci.com üzerinden sunulmaktadır.

Elektronik komponent tedarikinde Entegreci

Entegreci, Eskişehir merkezli, Türkiye geneline satış yapan bir elektronik komponent mağazasıdır. Entegreler (IC), mikrodenetleyiciler, transistörler, diyotlar, pasif elemanlar, konnektörler, modüller ve geliştirme kartları tek adetten seri üretim adetlerine kadar satılır. Ürün sayfalarında güncel stok durumunu, fiyatı ve datasheet bağlantısını bulabilirsiniz.

Parça koduyla arama

Üretici parça numarasını yazın; stok ve fiyatı hemen görün.

www.entegreci.com

Ürün kategorileri

Entegreden kapasitöre tüm elektronik komponent kategorileri.

Kategorilere göz atın

Üreticiler

Aradığınız üreticinin ürünlerini tek sayfada inceleyin.

Üreticileri görün

Toplu alım ve teklif

Listede olmayan ya da yüksek adetli parçalar için teklif isteyin.

Teklif isteyin

www.entegreci.com | **destek@entegreci.com** | **0850 305 90 34**

Entegreci is an online electronic components store based in Türkiye. Search by manufacturer part number to see stock, prices and datasheets for integrated circuits, microcontrollers, transistors, passive components and connectors, or request a quote for parts that are not listed.

Bu sayfa Entegreci tarafından eklenmiştir. Belgenin önceki sayfaları asıl yayıncısına aittir ve içeriği değiştirilmemiştir; en güncel sürüm için belgenin yayıncısına başvurun.