National Semiconductor

August 2000

LM119/LM219/LM319
High Speed Dual Comparator

General Description

The LM119 series are precision high speed dual comparators fabricated on a single monolithic chip. They are designed to operate over a wide range of supply voltages down to a single 5V logic supply and ground. Further, they have higher gain and lower input currents than devices like the LM710. The uncommitted collector of the output stage makes the LM119 compatible with RTL, DTL and TTL as well as capable of driving lamps and relays at currents up to 25 mA.

The LM319A offers improved precision over the standard LM319, with tighter tolerances on offset voltage, offset current, and voltage gain.

Although designed primarily for applications requiring operation from digital logic supplies, the LM119 series are fully specified for power supplies up to ±15V. It features faster response than the LM111 at the expense of higher power dissipation. However, the high speed, wide operating voltage range and low package count make the LM119 much more versatile than older devices like the LM711.

The LM119 is specified from −55˚C to +125˚C, the LM219 is specified from −25˚C to +85˚C, and the LM319A and LM319 are specified from 0˚C to +70˚C.

Features

- Two independent comparators
- Operates from a single 5V supply
- Typically 80 ns response time at ±15V
- Minimum fan-out of 2 each side
- Maximum input current of 1 µA over temperature
- Inputs and outputs can be isolated from system ground
- High common mode slew rate

Connection Diagram

Dual-In-Line Package

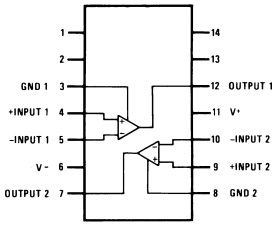

DS005705-4

Top View
Order Number LM119J, LM119J/883 (Note 1)**, LM219J, LM319J, LM319AM, LM319M, LM319AN or LM319N**
See NS Package Number J14A, M14A or N14A

Note 1: Also available per SMD# 8601401 or JM38510/10306

Typical Applications (Note 2)

Relay Driver

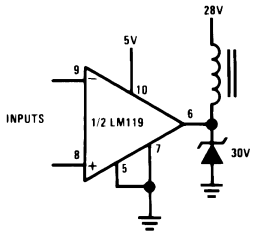

DS005705-5

Note 2: Pin numbers are for metal can package.

Window Detector

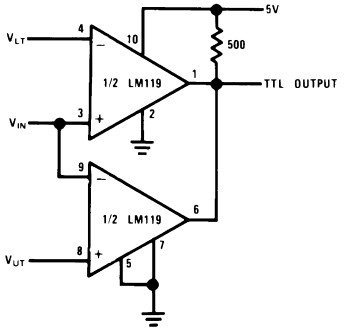

DS005705-6

V_{OUT} = 5V for $V_{LT} \leq V_{IN} \leq V_{UT}$
V_{OUT} = 0 for $V_{IN} \leq V_{LT}$ or $V_{IN} \geq V_{UT}$

© 2000 National Semiconductor Corporation

Absolute Maximum Ratings (Note 9)

If Military/Aerospace specified devices are required, please contact the National Semiconductor Sales Office/ Distributors for availability and specifications.

Total Supply Voltage	36V
Output to Negative Supply Voltage	36V
Ground to Negative Supply Voltage	25V
Ground to Positive Supply Voltage	18V
Differential Input Voltage	±5V
Input Voltage (Note 3)	±15V
ESD rating (1.5 kΩ in series with 100 pF)	800V
Power Dissipation (Note 4)	500 mW
Output Short Circuit Duration	10 sec
Storage Temperature Range	−65˚C to 150˚C
Lead Temperature (Soldering, 10 sec.)	260˚C
Soldering Information	
Dual-In-Line Package Soldering (10 seconds)	260˚C
Small Outline Package Vapor Phase (60 seconds)	215˚C
Infrared (15 seconds)	220˚C

See AN-450 “Surface Mounting Methods and Their Effect on Product Reliability” for other methods of soldering surface mount devices.

Operating Temperature Range

LM119	−55˚C to 125˚C
LM219	−25˚C to 85˚C

Electrical Characteristics (Note 5)

Parameter	Conditions	LM119/LM219			Units
		Min	Typ	Max	
Input Offset Voltage (Note 6)	T_A = 25˚C, $R_S \le 5k$		0.7	4.0	mV
Input Offset Current (Note 6)	T_A = 25˚C		30	75	nA
Input Bias Current	T_A = 25˚C		150	500	nA
Voltage Gain	T_A = 25˚C (Note 8)	10	40		V/mV
Response Time (Note 7)	T_A = 25˚C, V_S = ±15V		80		ns
Saturation Voltage	$V_{IN} \le -5$ mV, I_{OUT} = 25 mA				
	T_A = 25˚C		0.75	1.5	V
Output Leakage Current	$V_{IN} \ge 5$ mV, V_{OUT} = 35V				
	T_A = 25˚C		0.2	2	µA
Input Offset Voltage (Note 6)	$R_S \le 5k$			7	mV
Input Offset Current (Note 6)				100	nA
Input Bias Current				1000	nA
Input Voltage Range	V_S = ±15V	−12	±13	+12	V
	V^+ = 5V, V^- = 0	1		3	V
Saturation Voltage	$V^+ \ge 4.5$V, V^- = 0				
	$V_{IN} \le -6$ mV, $I_{SINK} \le 3.2$ mA				
	$T_A \ge 0$˚C		0.23	0.4	V
	$T_A \le 0$˚C			0.6	V
Output Leakage Current	$V_{IN} \ge 5$ mV, V_{OUT} = 35V,		1	10	µA
	V^- = V_{GND} = 0V				
Differential Input Voltage				±5	V
Positive Supply Current	T_A = 25˚C, V^+ = 5V, V^- = 0		4.3		mA
Positive Supply Current	T_A = 25˚C, V_S = ±15V		8	11.5	mA
Negative Supply Current	T_A = 25˚C, V_S = ±15V		3	4.5	mA

Note 3: For supply voltages less than ±15V the absolute maximum input voltage is equal to the supply voltage.

Note 4: The maximum junction temperature of the LM119 is 150˚C, while that of the LM219 is 110˚C. For operating at elevated temperatures, devices in the H10 package must be derated based on a thermal resistance of 160˚C/W, junction to ambient, or 19˚C/W, junction to case. The thermal resistance of the J14 and N14 packages is 100˚C/W, junction to ambient.

Note 5: These specifications apply for V_S = ±15V, and the Ground pin at ground, and $-55˚C \le T_A \le +125˚C$, unless otherwise stated. With the LM219, however, all temperature specifications are limited to $-25˚C \le T_A \le +85˚C$. The offset voltage, offset current and bias current specifications apply for any supply voltage from a single 5V supply up to ±15V supplies. Do not operate the device with more than 16V from ground to V_S.

Note 6: The offset voltages and offset currents given are the maximum values required to drive the output within a volt of either supply with a 1 mA load. Thus, these parameters define an error band and take into account the worst case effects of voltage gain and input impedance.

Note 7: The response time specified (see definitions) is for a 100 mV input step with 5 mV overdrive.

Note 8: Output is pulled up to 15V through a 1.4 kΩ resistor.

Note 9: Refer to RETS119X for LM119H/883 and LM119J/883 specifications.

Absolute Maximum Ratings

LM319A/319 (Note 9)

If Military/Aerospace specified devices are required, please contact the National Semiconductor Sales Office/ Distributors for availability and specifications.

Total Supply Voltage	36V
Output to Negative Supply Voltage	36V
Ground to Negative Supply Voltage	25V
Ground to Positive Supply Voltage	18V
Differential Input Voltage	±5V
Input Voltage (Note 10)	±15V
Power Dissipation (Note 11)	500 mW
Output Short Circuit Duration	10 sec
ESD rating (1.5 kΩ in series with 100 pF)	800V
Storage Temperature Range	−65˚C to 150˚C
Lead Temperature (Soldering, 10 sec.)	260˚C
Soldering Information	
Dual-In-Line Package	
Soldering (10 sec.)	260˚C
Small Outline Package	
Vapor Phase (60 sec.)	215˚C
Infrared (15 sec.)	220˚C

See AN-450 “Surface Mounting Methods and Their Effect on Product Reliability” for other methods of soldering surface mount devices.

Operating Temperature Range

LM319A, LM319	0˚C to 70˚C

Electrical Characteristics (Note 12)

Parameter	Conditions	LM319A			LM319			Units
		Min	Typ	Max	Min	Typ	Max	
Input Offset Voltage (Note 13)	T_A = 25˚C, $R_S \le 5k$		0.5	1.0		2.0	8.0	mV
Input Offset Current (Note 13)	T_A = 25˚C		20	40		80	200	nA
Input Bias Current	T_A = 25˚C		150	500		250	1000	nA
Voltage Gain	T_A = 25˚C (Note 15)	20	40		8	40		V/mV
Response Time (Note 14)	T_A = 25˚C, V_S = ±15V		80			80		ns
Saturation Voltage	$V_{IN} \le -10$ mV, I_{OUT} = 25 mA T_A = 25˚C		0.75	1.5		0.75	1.5	V
Output Leakage Current	$V_{IN} \ge 10$ mV, V_{OUT} = 35V, V^- = VGND = 0V, T_A = 25˚C		0.2	10		0.2	10	µA
Input Offset Voltage (Note 13)	$R_S \le 5k$			10			10	mV
Input Offset Current (Note 13)				300			300	nA
Input Bias Current				1000			1200	nA
Input Voltage Range	V_S = ±15V		±13			±13		V
	V^+ = 5V, V^- = 0	1		3	1		3	V
Saturation Voltage	$V^+ \ge 4.5$V, V^- = 0 $V_{IN} \le -10$ mV, $I_{SINK} \le 3.2$ mA		0.3	0.4		0.3	0.4	V
Differential Input Voltage				±5			±5	V
Positive Supply Current	T_A = 25˚C, V^+ = 5V, V^- = 0		4.3			4.3		mA
Positive Supply Current	T_A = 25˚C, V_S = ±15V		8	12.5		8	12.5	mA
Negative Supply Current	T_A = 25˚C, V_S = ±15V		3	5		3	5	mA

Note 10: For supply voltages less than ±15 the absolute maximum input voltage is equal to the supply voltage.

Note 11: The maximum junction temperature of the LM319A and LM319 is 85˚C. For operating at elevated temperatures, devices in the H10 package must be derated based on a thermal resistance of 160˚C/W, junction to ambient, or 19˚C/W, junction to case. The thermal resistance of the N14 and J14 package is 100˚C/W, junction to ambient. The thermal resistance of the M14 package is 115˚C/W, junction to ambient.

Note 12: These specifications apply for V_S = ±15V, and 0˚C ≤ T_A ≤ 70˚C, unless otherwise stated. The offset voltage, offset current and bias current specifications apply for any supply voltage from a single 5V supply up to ±15V supplies. Do not operate the device with more than 16V from ground to V_S.

Note 13: The offset voltages and offset currents given are the maximum values required to drive the output within a volt of either supply with a 1 mA load. Thus, these parameters define an error band and take into account the worst case effects of voltage gain and input impedance.

Note 14: The response time specified is for a 100 mV input step with 5 mV overdrive.

Note 15: Output is pulled up to 15V through a 1.4 kΩ resistor.

Typical Performance Characteristics LM119A/LM119/LM219

Input Currents

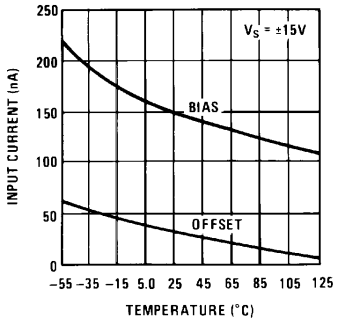

DS005705-10

Common Mode Limits

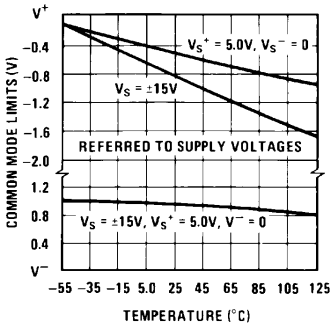

DS005705-11

Transfer Function

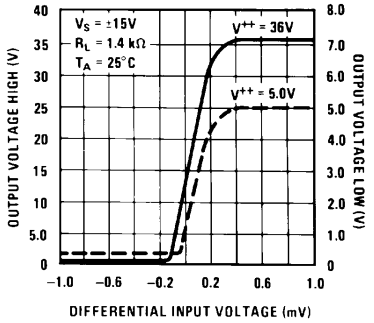

DS005705-12

Response Time for Various Input Overdrives

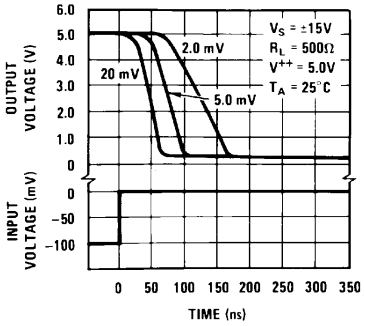

DS005705-13

Response Time for Various Input Overdrives

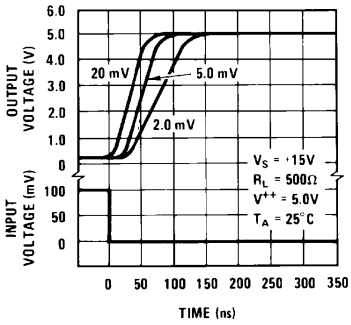

DS005705-14

Input Characteristics

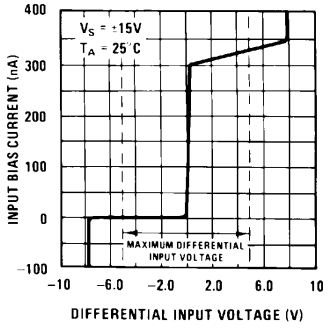

DS005705-15

Response Time for Various Input Overdrives

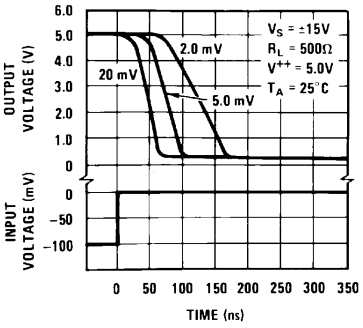

DS005705-16

Response Time for Various Input Overdrives

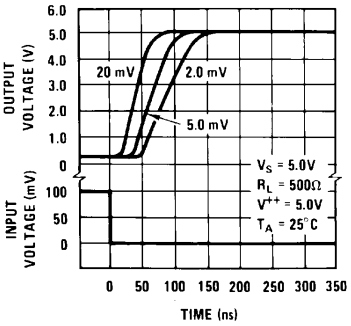

DS005705-17

Output Saturation Voltage

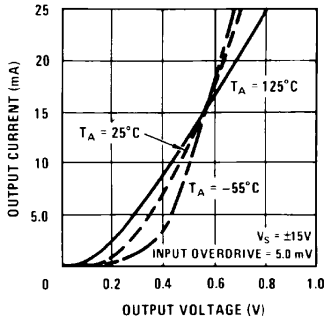

DS005705-18

Typical Performance Characteristics LM119A/LM119/LM219 (Continued)

Supply Current

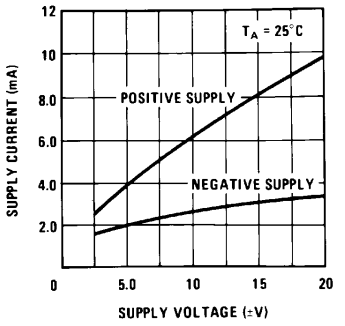

DS005705-19

Supply Current

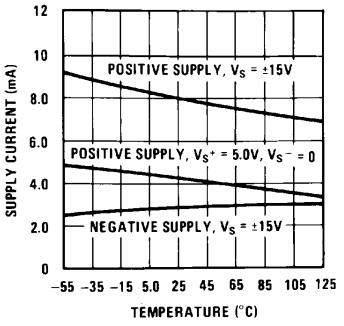

DS005705-20

Output Limiting Characteristics

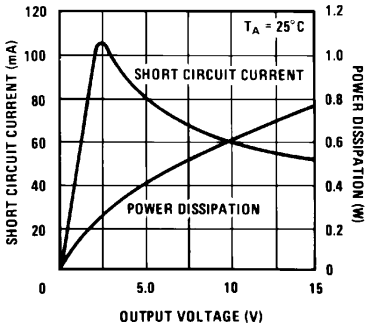

DS005705-21

Typical Performance Characteristics LM319A, LM319

Input Currents

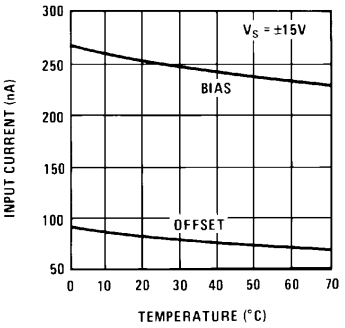

DS005705-22

Supply Currents

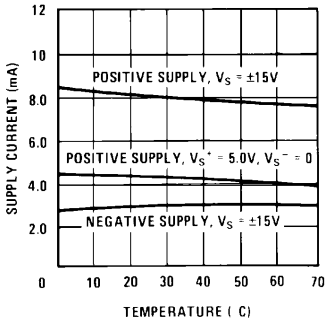

DS005705-23

Transfer Function

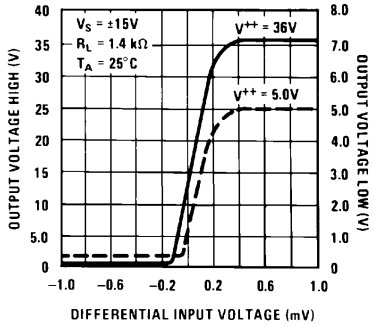

DS005705-24

Response Time for Various Input Overdrives

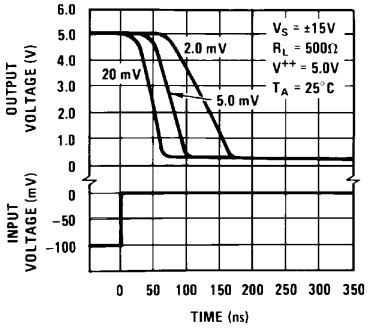

DS005705-25

Response Time for Various Input Overdrives

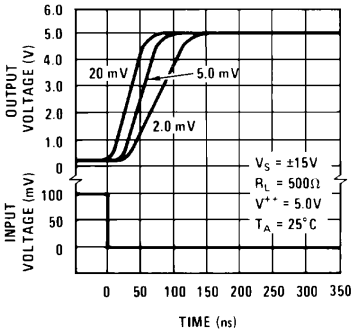

DS005705-26

Input Characteristics

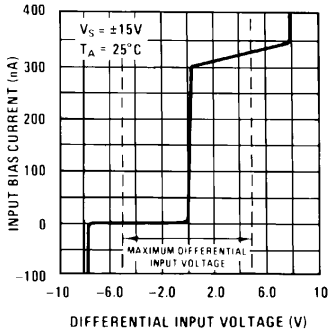

DS005705-27

Typical Performance Characteristics LM319A, LM319 (Continued)

Response Time for Various Input Overdrives

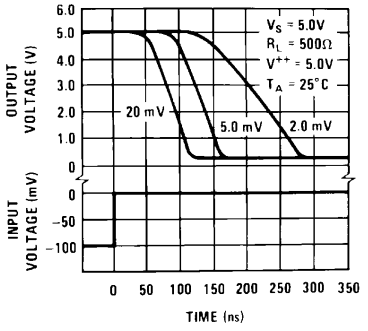

DS005705-28

Response Time for Various Input Overdrives

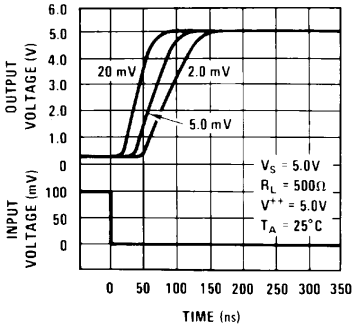

DS005705-29

Output Saturation Voltage

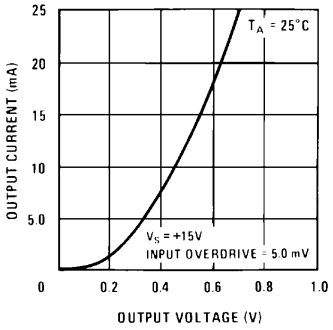

DS005705-30

Supply Current

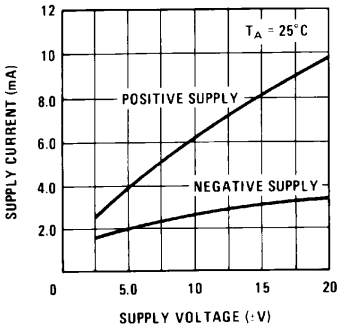

DS005705-31

Common Mode Limits

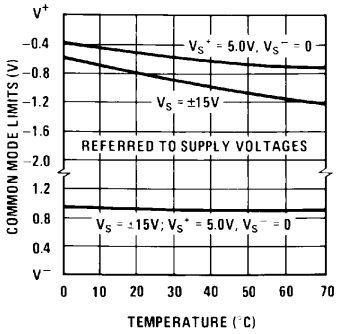

DS005705-32

Output Limiting Characteristics

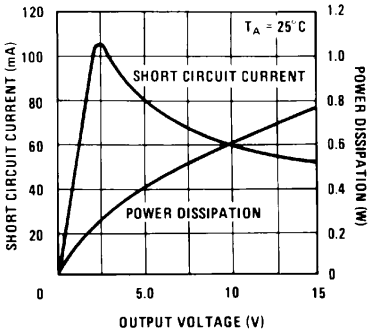

DS005705-33

Schematic Diagram

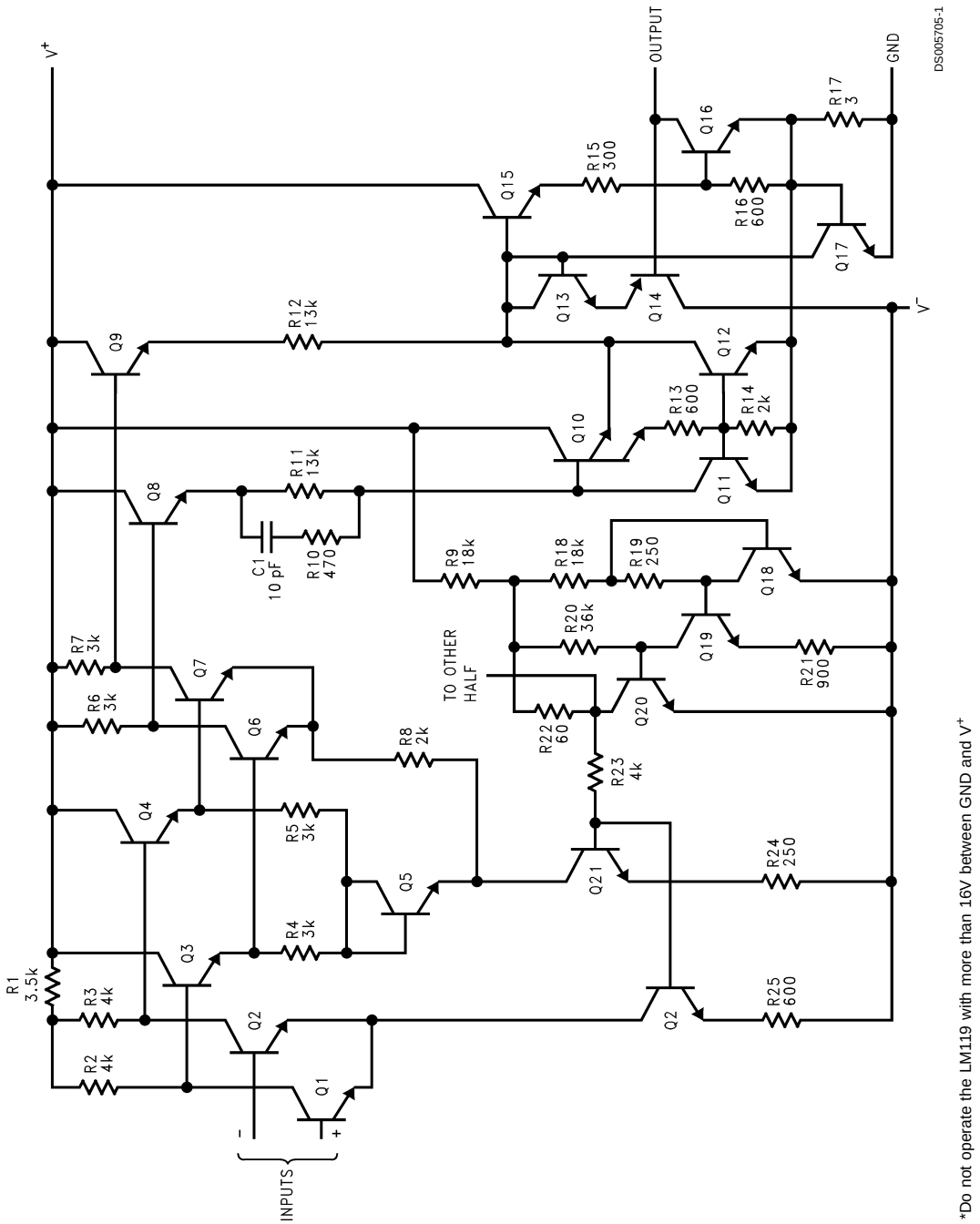

Connection Diagrams

Metal Can Package

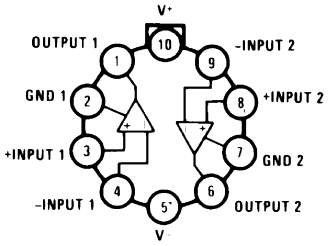

DS005705-7

Case is connected to pin 5 (V^-)

Top View
Order Number LM119H, LM119H/883 (Note 1)**, or LM319H**
See NS Package Number H10C

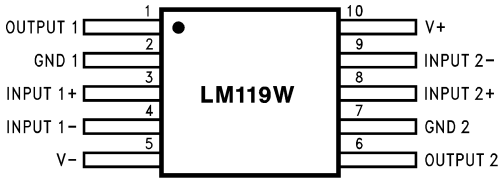

DS005705-9

Order Number LM119W/883
See NS Package Number W10A

Physical Dimensions inches (millimeters) unless otherwise noted

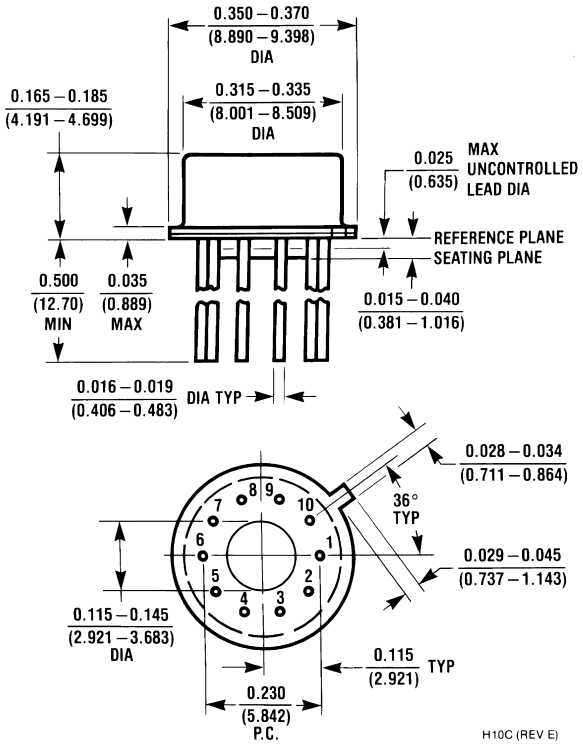

Metal Can Package (H)
Order Number LM119H, LM119H/883, LM319AH or LM319H
NS Package Number H10C

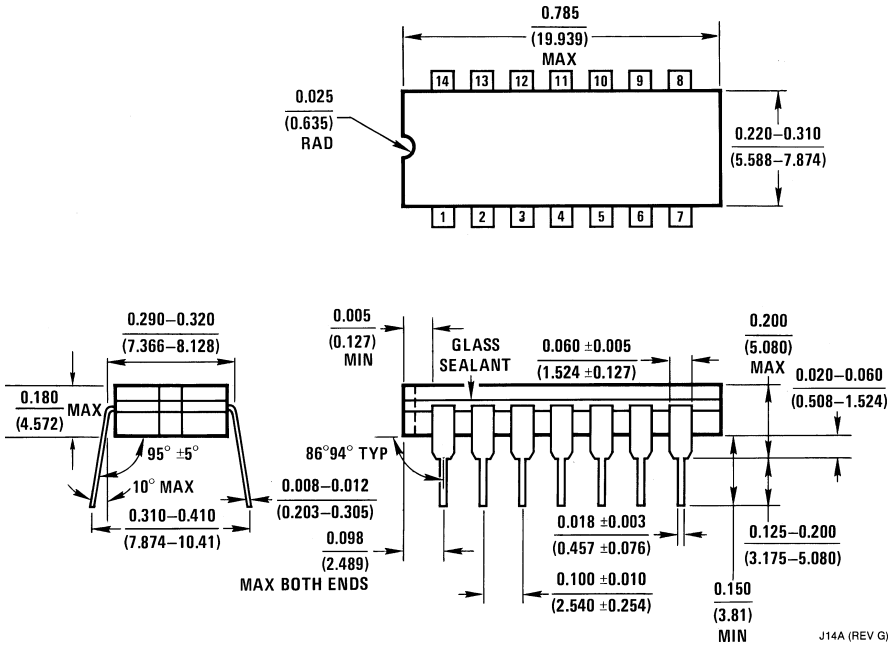

Cavity Dual-In-Line Package (J)
Order Number LM119J, LM119J/883, LM219J, LM319AJ or LM319J
NS Package Number J14A

Physical Dimensions inches (millimeters) unless otherwise noted (Continued)

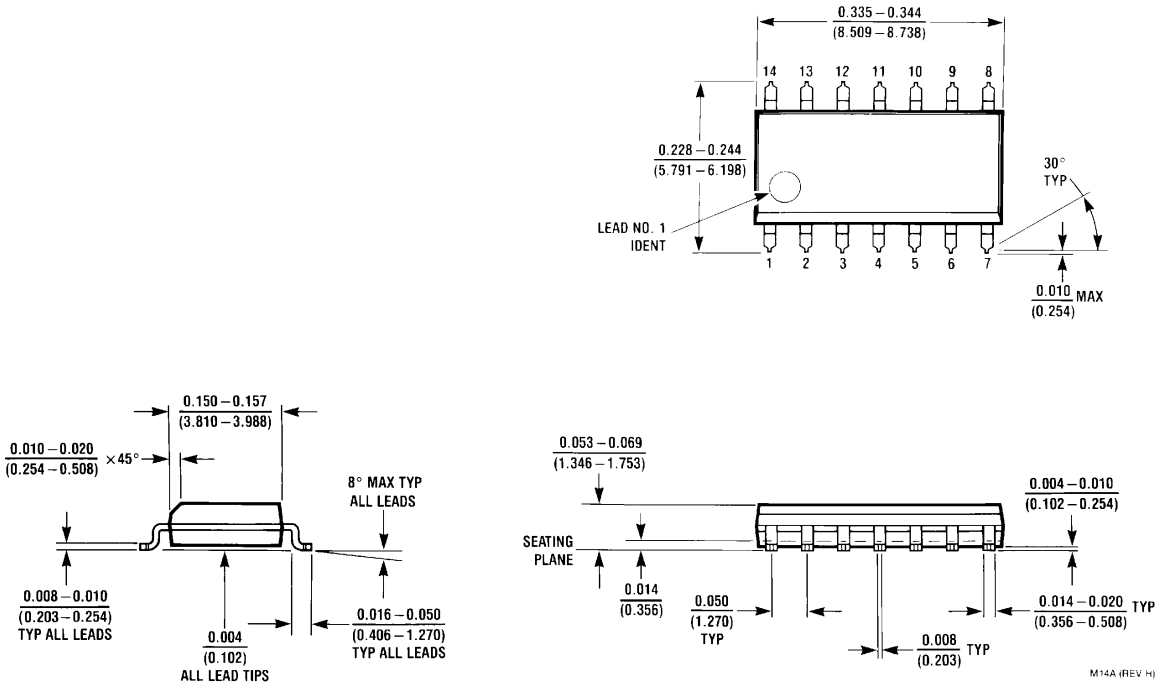

Dual-In-Line Package (M)
Order Number LM319AM or LM319M
NS Package Number M14A

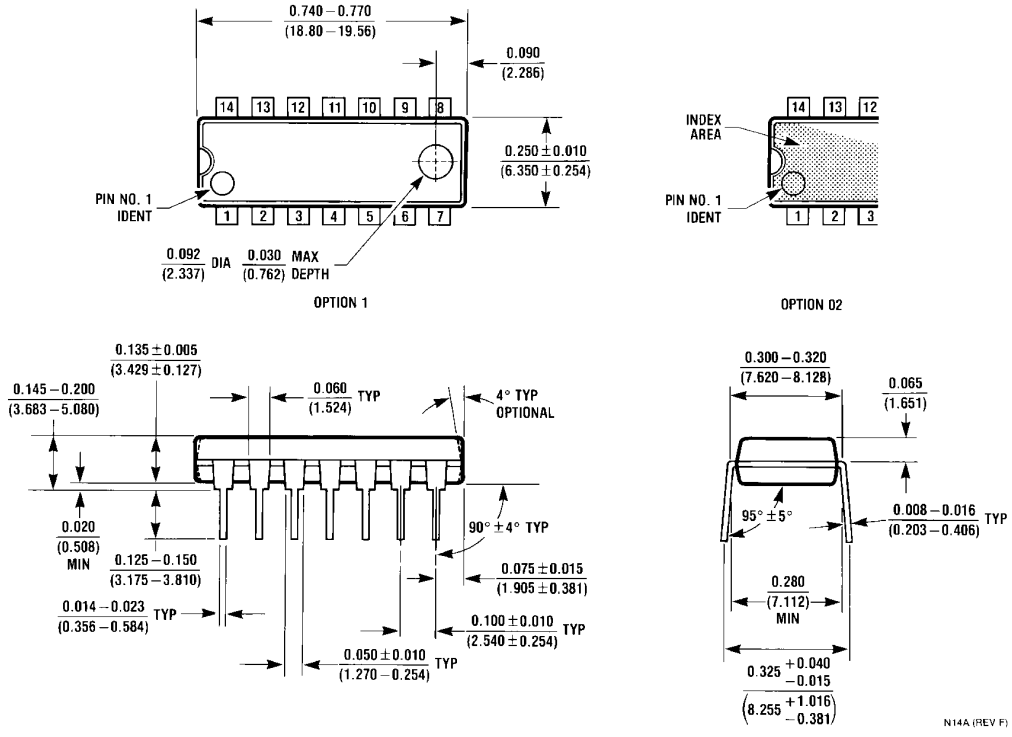

Molded Dual-In-Line Package (N)
Order Number LM319AN or LM319N
NS Package Number N14A

Physical Dimensions inches (millimeters) unless otherwise noted (Continued)

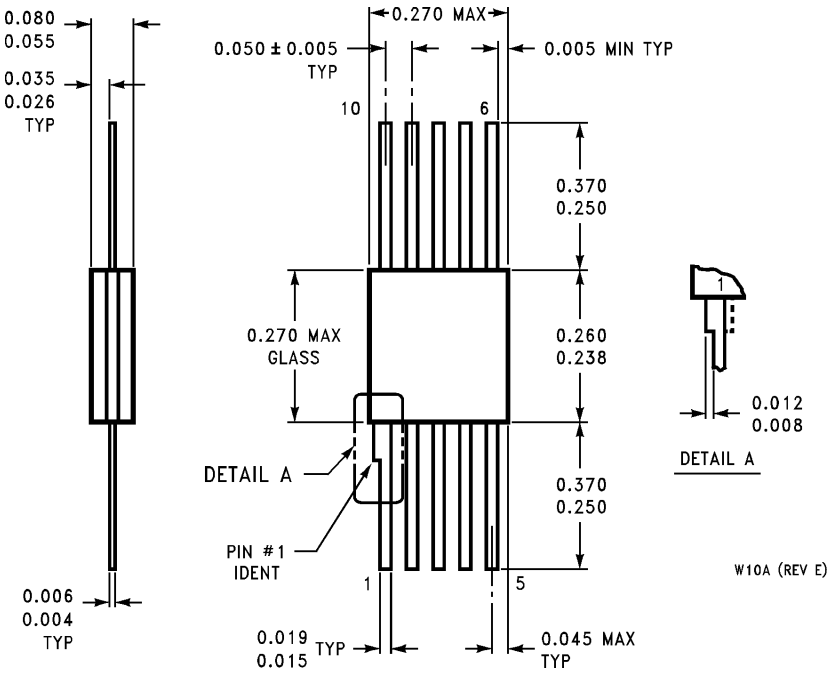

Order Number LM119W/883, LM119WG/883
NS Package Number W10A, WG10A

LIFE SUPPORT POLICY

NATIONAL'S PRODUCTS ARE NOT AUTHORIZED FOR USE AS CRITICAL COMPONENTS IN LIFE SUPPORT DEVICES OR SYSTEMS WITHOUT THE EXPRESS WRITTEN APPROVAL OF THE PRESIDENT AND GENERAL COUNSEL OF NATIONAL SEMICONDUCTOR CORPORATION. As used herein:

1. Life support devices or systems are devices or systems which, (a) are intended for surgical implant into the body, or (b) support or sustain life, and whose failure to perform when properly used in accordance with instructions for use provided in the labeling, can be reasonably expected to result in a significant injury to the user.
2. A critical component is any component of a life support device or system whose failure to perform can be reasonably expected to cause the failure of the life support device or system, or to affect its safety or effectiveness.

National Semiconductor Corporation
Americas
Tel: 1-800-272-9959
Fax: 1-800-737-7018
Email: support@nsc.com
www.national.com

National Semiconductor Europe
Fax: +49 (0) 180-530 85 86
Email: europe.support@nsc.com
Deutsch Tel: +49 (0) 69 9508 6208
English Tel: +44 (0) 870 24 0 2171
Français Tel: +33 (0) 1 41 91 8790

National Semiconductor Asia Pacific Customer Response Group
Tel: 65-2544466
Fax: 65-2504466
Email: ap.support@nsc.com

National Semiconductor Japan Ltd.
Tel: 81-3-5639-7560
Fax: 81-3-5639-7507

National does not assume any responsibility for use of any circuitry described, no circuit patent licenses are implied and National reserves the right at any time without notice to change said circuitry and specifications.

ENTEGRECİ

Bu belge www.entegreci.com üzerinden sunulmaktadır.

Elektronik komponent tedarikinde Entegreci

Entegreci, Eskişehir merkezli, Türkiye geneline satış yapan bir elektronik komponent mağazasıdır. Entegreler (IC), mikrodenetleyiciler, transistörler, diyotlar, pasif elemanlar, konnektörler, modüller ve geliştirme kartları tek adetten seri üretim adetlerine kadar satılır. Ürün sayfalarında güncel stok durumunu, fiyatı ve datasheet bağlantısını bulabilirsiniz.

Parça koduyla arama

Üretici parça numarasını yazın; stok ve fiyatı hemen görün.

www.entegreci.com

Ürün kategorileri

Entegreden kapasitöre tüm elektronik komponent kategorileri.

Kategorilere göz atın

Üreticiler

Aradığınız üreticinin ürünlerini tek sayfada inceleyin.

Üreticileri görün

Toplu alım ve teklif

Listede olmayan ya da yüksek adetli parçalar için teklif isteyin.

Teklif isteyin

www.entegreci.com | **destek@entegreci.com** | **0850 305 90 34**

Entegreci is an online electronic components store based in Türkiye. Search by manufacturer part number to see stock, prices and datasheets for integrated circuits, microcontrollers, transistors, passive components and connectors, or request a quote for parts that are not listed.

Bu sayfa Entegreci tarafından eklenmiştir. Belgenin önceki sayfaları asıl yayıncısına aittir ve içeriği değiştirilmemiştir; en güncel sürüm için belgenin yayıncısına başvurun.