Distributed by:

JAMECO® ELECTRONICS

www.Jameco.com ✦ 1-800-831-4242

The content and copyrights of the attached material are the property of its owner.

Jameco Part Number 837599

National Semiconductor

July 2005

LM2941/LM2941C
1A Low Dropout Adjustable Regulator

General Description

The LM2941 positive voltage regulator features the ability to source 1A of output current with a typical dropout voltage of 0.5V and a maximum of 1V over the entire temperature range. Furthermore, a quiescent current reduction circuit has been included which reduces the ground pin current when the differential between the input voltage and the output voltage exceeds approximately 3V. The quiescent current with 1A of output current and an input-output differential of 5V is therefore only 30mA. Higher quiescent currents only exist when the regulator is in the dropout mode ($V_{IN} - V_{OUT} \leq 3V$).

Designed also for vehicular applications, the LM2941 and all regulated circuitry are protected from reverse battery installations or two-battery jumps. During line transients, such as load dump when the input voltage can momentarily exceed the specified maximum operating voltage, the regulator will automatically shut down to protect both the internal circuits and the load. Familiar regulator features such as short circuit and thermal overload protection are also provided.

Features

- LLP space saving package
- Output voltage adjustable from 5V to 20V
- Dropout voltage typically 0.5V @ I_O = 1A
- Output current in excess of 1A
- Trimmed reference voltage
- Reverse battery protection
- Internal short circuit current limit
- Mirror image insertion protection
- P^+ Product Enhancement tested
- TTL, CMOS compatible ON/OFF switch

Connection Diagram and Ordering Information

TO-220 Plastic Package

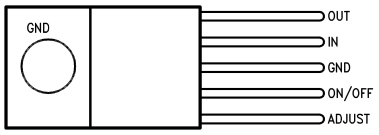

Top View
Order Number LM2941T or LM2941CT
See NS Package Number TO5A

TO-263 Surface-Mount Package

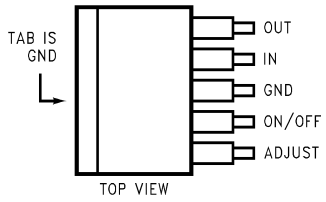

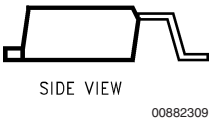

Order Number LM2941S, LM2941SX or LM2941CS, LM2941CSX
See NS Package Number TS5B

16-Lead Ceramic Dual-in-Line Package

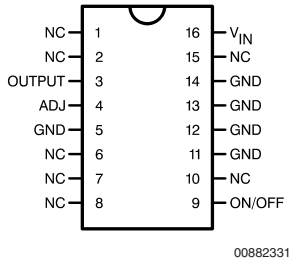

Top View
Order Number LM2941J/883
LM2941J-QMLV, 5962-9166701QEA
See NS Package Number J16A

16-Lead Ceramic Surface Mount Package

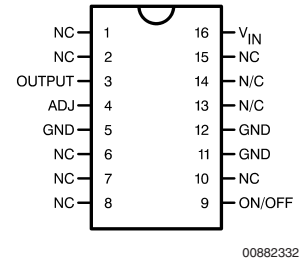

Top View
Order Number LM2941WG/883
LM2941WG-QMLV,
5962-9166701QYA
See NS Package Number WG16A

8-Lead LLP Surface Mount Package

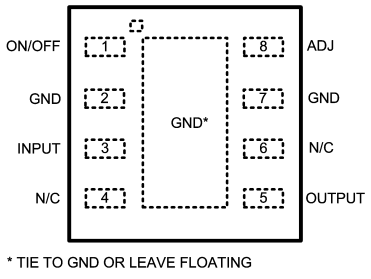

Top View
Ordering Number LM2941LD, LM2941LDX
See NS Package Number LDC08A

Note: Pin 2 & 7 are fused to center DAP

© 2005 National Semiconductor Corporation

Absolute Maximum Ratings (Note 1)

If Military/Aerospace specified devices are required, please contact the National Semiconductor Sales Office/ Distributors for availability and specifications.

Input Voltage (Survival Voltage, ≤ 100ms)	
LM2941T, LM2941S, LM2941LD	60V
LM2941CT, LM2941CS	45V
Internal Power Dissipation (Note 3)	Internally Limited
Maximum Junction Temperature	150˚C
Storage Temperature Range	$-65˚C \le T_J \le +150˚C$
Lead Temperature	
(Soldering, 10 seconds)	
TO-220 (T) Package	260˚C
TO-263 (S) Package	260˚C

ESD susceptibility to be determined.

Operating Ratings

Maximum Input Voltage	26V
Temperature Range	
LM2941T	$-40˚C \le T_J \le 125˚C$
LM2941CT	$0˚C \le T_J \le 125˚C$
LM2941S	$-40˚C \le T_J \le 125˚C$
LM2941CS	$0˚C \le T_J \le 125˚C$
LM2941J	$-55˚C \le T_J \le 125˚C$
LM2941WG	$-55˚C \le T_J \le 125˚C$
LM2941LD	$-40˚C \le T_J \le 125˚C$

Electrical Characteristics—LM2941T, LM2941S, LM2941J, LM2941WG, LM2941LD

$5V \le V_O \le 20V$, $V_{IN} = V_O + 5V$, $C_O = 22\mu F$, unless otherwise specified. Specifications in standard typeface apply for $T_J = 25˚C$, while those in **boldface type** apply over the full **Operating Temperature Range.**

Parameter	Conditions	Typ	LM2941J LM2941WG Limit (Note 2) (Note 4)	LM2941T LM2941S LM2941LD Limit (Note 5)	Units (Limits)
Reference Voltage	$5mA \le I_O \le 1A$ (Note 6)	1.275	1.237/**1.211** 1.313/**1.339**	1.237/**1.211** 1.313/**1.339**	V(min) V(max)
Line Regulation	$V_O + 2V \le V_{IN} \le 26V$, $I_O = 5mA$	4	10/**10**	10/**10**	mV/V(max)
Load Regulation	$50mA \le I_O \le 1A$	7	10/**10**	10/**10**	mV/V(max)
Output Impedance	100 mADC and 20 mArms $f_O = 120Hz$	7			mΩ/V
Quiescent Current	$V_O + 2V \le V_{IN} < 26V$, $I_O = 5mA$	10	15/**20**	15/**20**	mA(max)
	$V_{IN} = V_O + 5V$, $I_O = 1A$	30	45/**60**	45/**60**	mA(max)
RMS Output Noise, % of V_{OUT}	10Hz–100kHz $I_O = 5mA$	0.003			%
Ripple Rejection	$f_O = 120Hz$, 1 Vrms, $I_L = 100mA$	0.005	0.02/**0.04**	0.02/**0.04**	%/V(max)
Long Term Stability		0.4			%/1000 Hr
Dropout Voltage	$I_O = 1A$	0.5	0.8/**1.0**	0.8/**1.0**	V(max)
	$I_O = 100mA$	110	200/**200**	200/**200**	mV(max)
Short Circuit Current	V_{IN} Max = 26V (Note 7)	1.9	1.6/**1.3**	1.6	A(min)
Maximum Line Transient	V_O Max 1V Above Nominal V_O $R_O = 100$, $T \le 100ms$	75	60/**60**	60/**60**	V(min)
Maximum Operational Input Voltage		31	26/**26**	26/**26**	V_{DC}
Reverse Polarity DC Input Voltage	$R_O = 100$, $V_O \ge -0.6V$	−30	−15/**−15**	−15/**−15**	V(min)
Reverse Polarity Transient Input Voltage	$T \le 100ms$, $R_O = 100\Omega$	−75	−50/**−50**	−50/**−50**	V(min)
ON/OFF Threshold Voltage ON	$I_O \le 1A$	1.30	0.80/**0.80**	0.80/**0.80**	V(max)
ON/OFF Threshold Voltage OFF	$I_O \le 1A$	1.30	2.00/**2.00**	2.00/**2.00**	V(min)
ON/OFF Threshold Current	$V_{ON/OFF} = 2.0V$, $I_O \le 1A$	50	100/**300**	100/**300**	μA(max)

Electrical Characteristics—LM2941CT, LM2941CS

$5V \le V_O \le 20V$, $V_{IN} = V_O + 5V$, $C_O = 22\mu F$, unless otherwise specified. Specifications in standard typeface apply for $T_J = 25^\circ C$, while those in **boldface type** apply over the full **Operating Temperature Range**.

Parameter	Conditions	Typ	Limit (Note 5)	Units (Limits)
Reference Voltage	$5mA \le I_O \le 1A$ (Note 6)	1.275	1.237/**1.211** 1.313/**1.339**	V(min) V(max)
Line Regulation	$V_O + 2V \le V_{IN} \le 26V$, $I_O = 5mA$	4	10	mV/V(max)
Load Regulation	$50mA \le I_O \le 1A$	7	10	mV/V(max)
Output Impedance	100 mADC and 20 mArms $f_O = 120Hz$	7		mΩ/V
Quiescent Current	$V_O + 2V \le V_{IN} < 26V$, $I_O = 5mA$	10	15	mA(max)
	$V_{IN} = V_O + 5V$, $I_O = 1A$	30	45/**60**	mA(max)
RMS Output Noise, % of V_{OUT}	10Hz–100kHz $I_O = 5mA$	0.003		%
Ripple Rejection	$f_O = 120Hz$, 1 Vrms, $I_L = 100mA$	0.005	0.02	%/V(max)
Long Term Stability		0.4		%/1000 Hr
Dropout Voltage	$I_O = 1A$	0.5	0.8/**1.0**	V(max)
	$I_O = 100mA$	110	200/**200**	mV(max)
Short Circuit Current	V_{IN} Max = 26V (Note 7)	1.9	1.6	A(min)
Maximum Line Transient	V_O Max 1V Above Nominal V_O $R_O = 100\Omega$, $T \le 100ms$	55	45	V(min)
Maximum Operational Input Voltage		31	26	V_{DC}
Reverse Polarity DC Input Voltage	$R_O = 100\Omega$, $V_O \ge -0.6V$	–30	–15	V(min)
Reverse Polarity Transient Input Voltage	$T \le 100ms$, $R_O = 100\Omega$	–55	–45	V(min)
ON/OFF Threshold Voltage ON	$I_O \le 1A$	1.30	0.80	V(max)
ON/OFF Threshold Voltage OFF	$I_O \le 1A$	1.30	2.00	V(min)
ON/OFF Threshold Current	$V_{ON/OFF} = 2.0V$, $I_O \le 1A$	50	100	μA(max)

Thermal Performance

Thermal Resistance Junction-to-Case	5-Lead TO-220	3		°C/W
	5-Lead TO-263	3		°C/W
Thermal Resistance Junction-to-Ambient	5-Lead TO-220	53		°C/W
	5-Lead TO-263	73		°C/W
	8-Lead LLP (Note 3)	35		°C/W

Note 1: Absolute Maximum Ratings indicate limits beyond which damage to the device may occur. Operating ratings indicate conditions for which the device is intended to be functional, but device parameter specifications may not be guaranteed under these conditions. For guaranteed specifications and test conditions, see the Electrical Characteristics.

Note 2: A military RETS specification available upon request. For more information about military-aerospace products, see the Mil-Aero web page at http://www.national.com/appinfo/milaero/index.html.

Note 3: The maximum power dissipation is a function of $T_J(max)$, θ_{JA}, and T_A. The maximum allowable power dissipation at any ambient temperature is $P_D = (T_J(max) - T_A)/\theta_{JA}$. If this dissipation is exceeded, the die temperature will rise above 150°C and the LM2941 will go into thermal shutdown. If the TO-263 package is used, the thermal resistance can be reduced by increasing the P.C. board copper area thermally connected to the package: Using 0.5 square inches of copper area, θ_{JA} is 50°C/W; with 1 square inch of copper area, θ_{JA} is 37°C/W; and with 1.6 or more square inches of copper area, θ_{JA} is 32°C/W. Thermal performance for the LLP package was obtained using a JESD51-7 board with six vias, using no airflow and an ambient temperature of 22°C. The value θ_{JA} for the LLP package is specifically dependent on PCB trace area, trace material, and the number of layers and thermal vias. For improved thermal resistance and power dissipation for the LLP package, refer to Application Note AN-1187. It is recommended that 6 vias be placed under the center pad to improve thermal performance.

Note 4: All limits guaranteed at room temperature (standard typeface) and at temperature extremes (boldface type). All limits are used to calculate Outgoing Quality Level, and are 100% production tested.

Note 5: All limits guaranteed at room temperature (standard typeface) and at temperature extremes (boldface type). All room temperature limits are 100% production tested. All limits at temperature extremes are guaranteed via correlation using standard Statistical Quality Control (SQC) methods.

Note 6: The output voltage range is 5V to 20V and is determined by the two external resistors, R1 and R2. See Typical Application Circuit.

Thermal Performance (Continued)

Note 7: Output current capability will decrease with increasing temperature, but will not go below 1A at the maximum specified temperatures.

Typical Performance Characteristics

Dropout Voltage

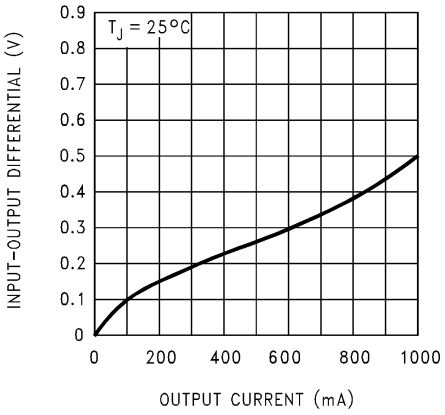

00882311

Dropout Voltage vs. Temperature

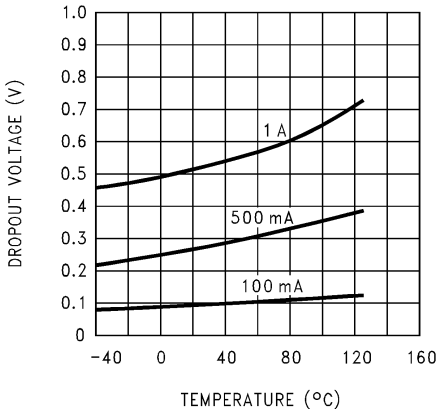

00882312

Output Voltage

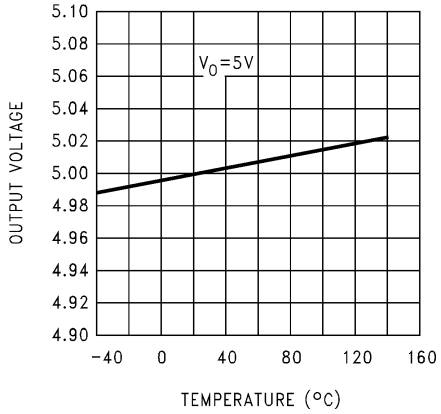

00882313

Quiescent Current vs. Temperature

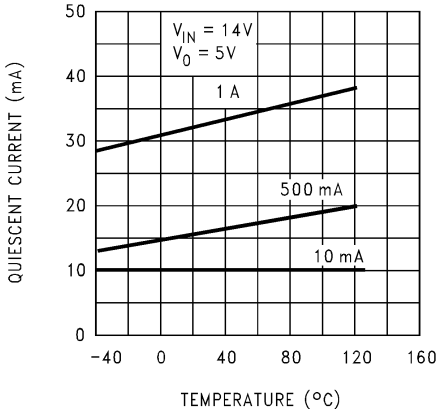

00882314

Quiescent Current

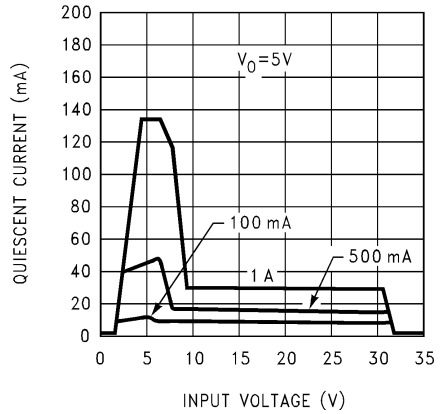

00882315

Quiescent Current

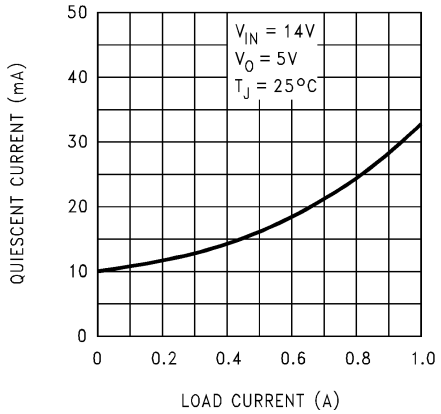

00882316

Typical Performance Characteristics (Continued)

Line Transient Response

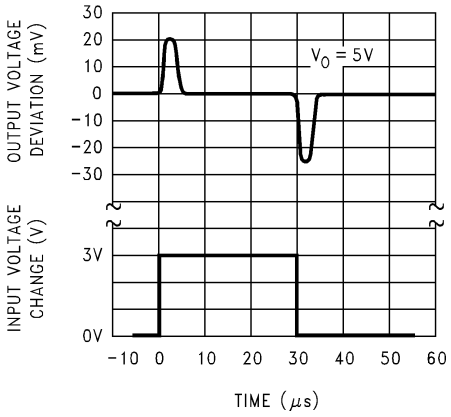

00882317

Load Transient Response

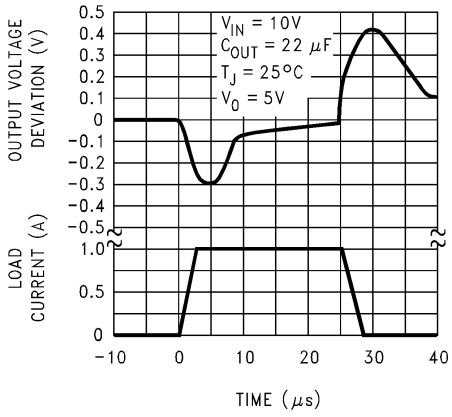

00882318

Ripple Rejection

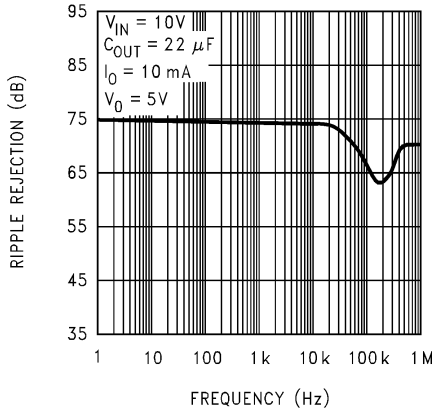

00882319

Output Impedance

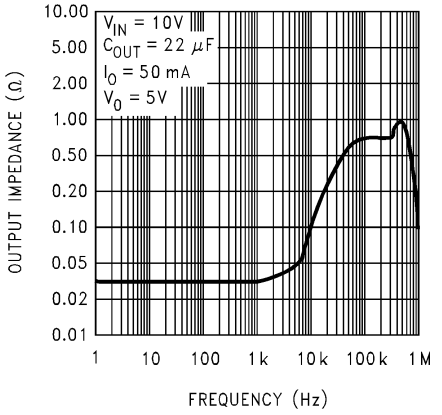

00882320

Low Voltage Behavior

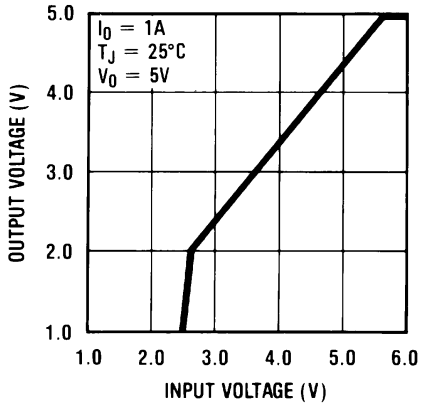

00882321

Low Voltage Behavior

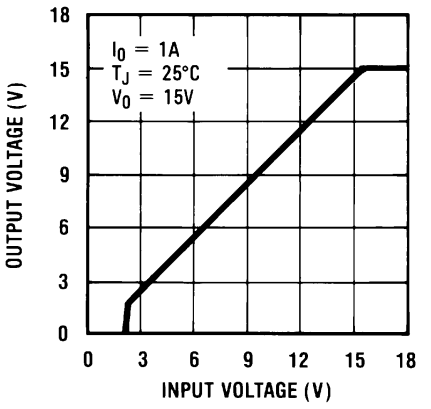

00882322

Typical Performance Characteristics (Continued)

Output Capacitor ESR

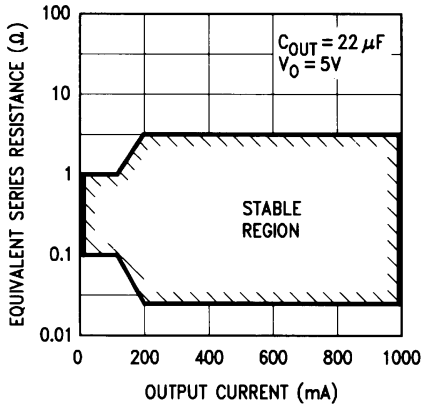

00882323

Output at Voltage Extremes

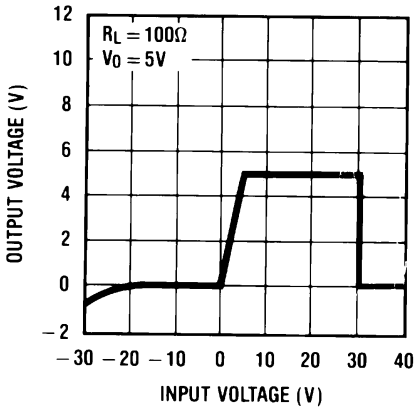

00882324

Output at Voltage Extremes

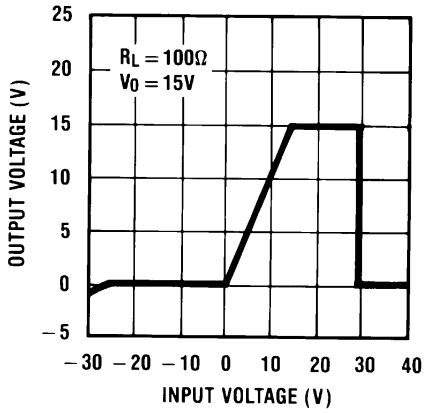

00882325

Peak Output Current

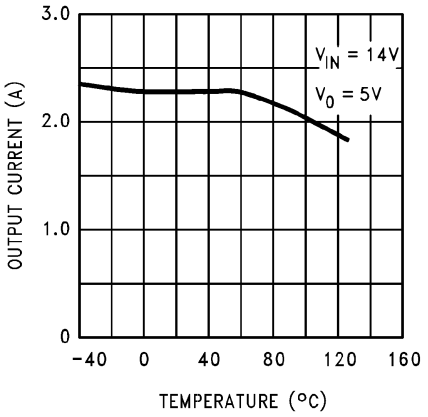

00882326

Maximum Power Dissipation (TO-220)

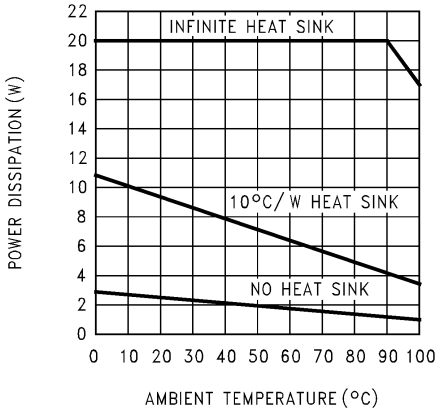

00882327

Maximum Power Dissipation (TO-3)

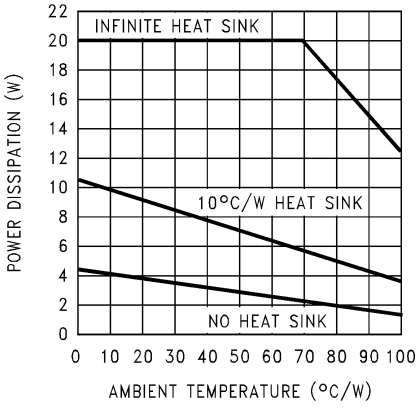

00882328

Typical Performance Characteristics (Continued)

Maximum Power Dissipation (TO-263) (Note 3)

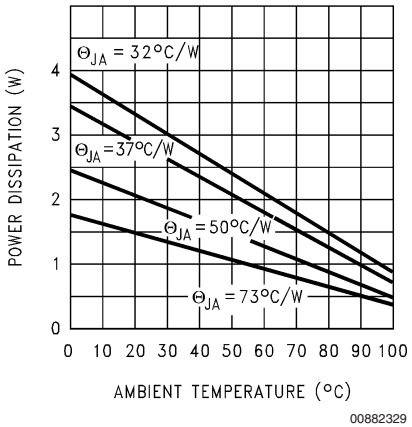

00882329

Definition of Terms

Dropout Voltage: The input-voltage differential at which the circuit ceases to regulate against further reduction in input voltage. Measured when the output voltage has dropped 100mV from the nominal value obtained at (V_{OUT} + 5V) input, dropout voltage is dependent upon load current and junction temperature.

Input Voltage: The DC voltage applied to the input terminals with respect to ground.

Input-Output Differential: The voltage difference between the unregulated input voltage and the regulated output voltage for which the regulator will operate.

Line Regulation: The change in output voltage for a change in the input voltage. The measurement is made under conditions of low dissipation or by using pulse techniques such that the average chip temperature is not significantly affected.

Load Regulation: The change in output voltage for a change in load current at constant chip temperature.

Long Term Stability: Output voltage stability under accelerated life-test conditions after 1000 hours with maximum rated voltage and junction temperature.

Output Noise Voltage: The rms AC voltage at the output, with constant load and no input ripple, measured over a specified frequency range.

Quiescent Current: That part of the positive input current that does not contribute to the positive load current. The regulator ground lead current.

Ripple Rejection: The ratio of the peak-to-peak input ripple voltage to the peak-to-peak output ripple voltage.

Temperature Stability of V_O: The percentage change in output voltage for a thermal variation from room temperature to either temperature extreme.

Typical Applications

5V to 20V Adjustable Regulator

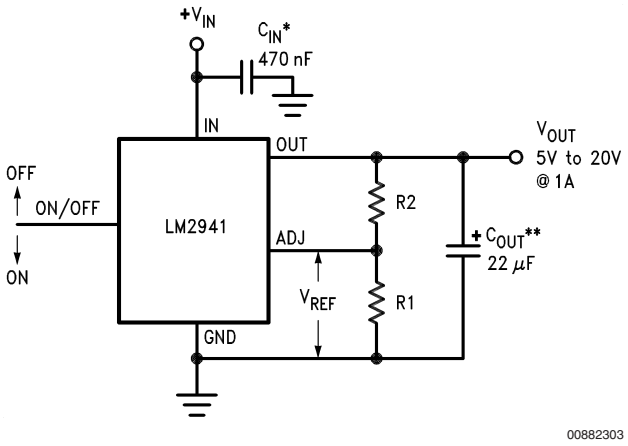

$$V_{OUT} = \text{Reference voltage} \times \frac{R1 + R2}{R1} \text{ where } V_{REF} = 1.275 \text{ typical}$$

$$\text{Solving for R2: } R2 = R1 \left(\frac{V_O}{V_{REF}} - 1 \right)$$

Note: Using 1k for R1 will ensure that the input bias current error of the adjust pin will be negligible. Do not bypass R1 or R2. This will lead to instabilities.

* Required if regulator is located far from power supply filter.

** C_{OUT} must be at least 22µF to maintain stability. May be increased without bound to maintain regulation during transients. Locate as close as possible to the regulator. This capacitor must be rated over the same operating temperature range as the regulator and the ESR is critical; see curve.

1A Switch

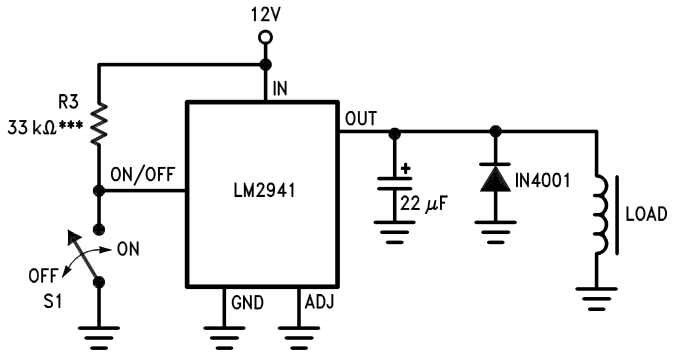

*** To assure shutdown, select Resistor R3 to guarantee at least 300µA of pull-up current when S1 is open. (Assume 2V at the ON/OFF pin.)

Equivalent Schematic Diagram

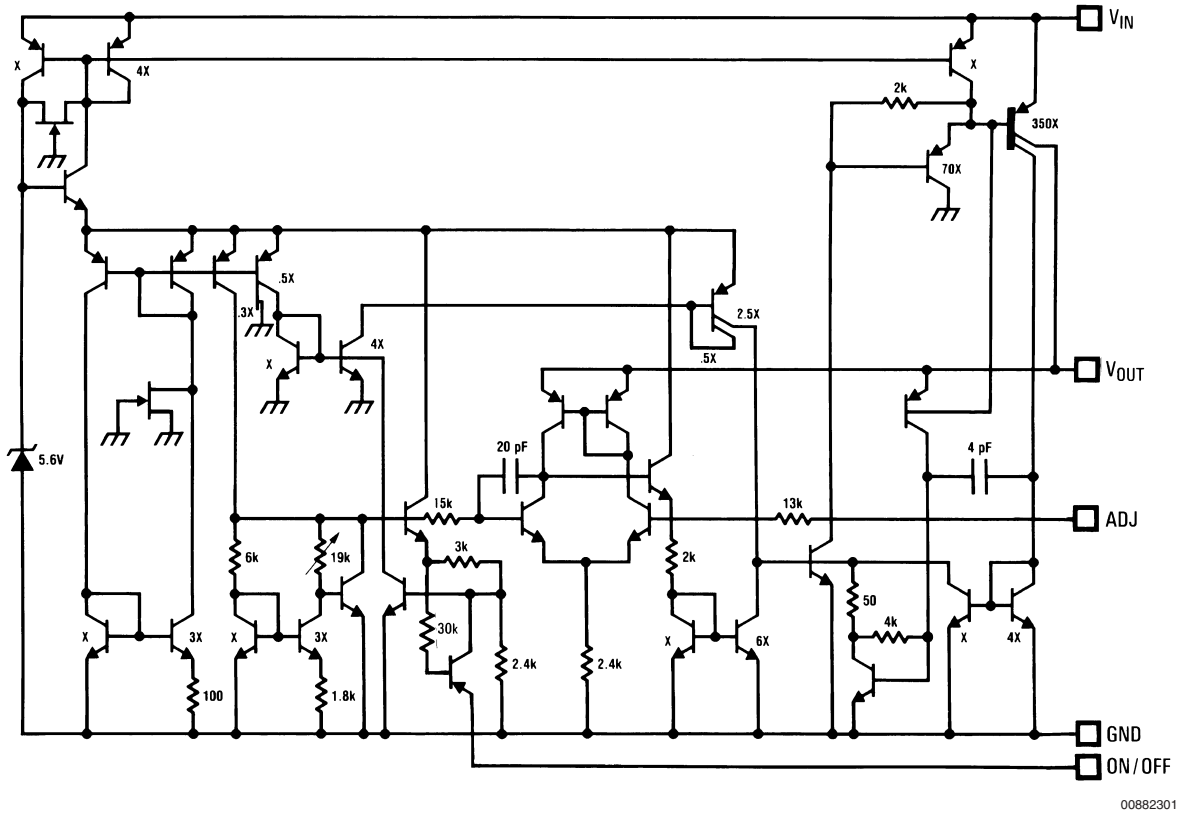

00882301

Physical Dimensions inches (millimeters) unless otherwise noted

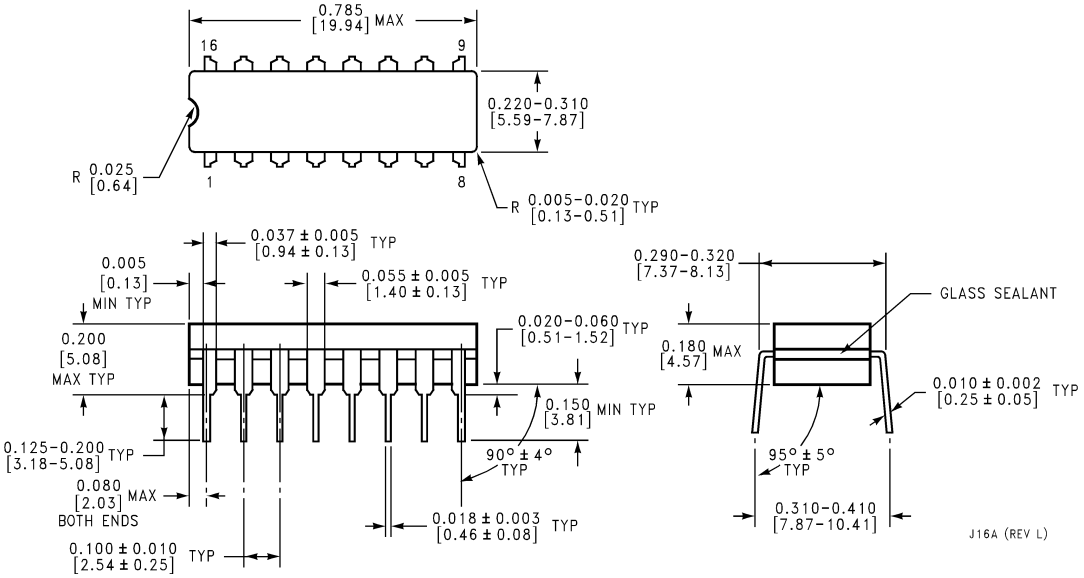

Order Number LM2941J/883
LM2941J-QMLV, 5962-9166701QEA
NS Package Number J16A

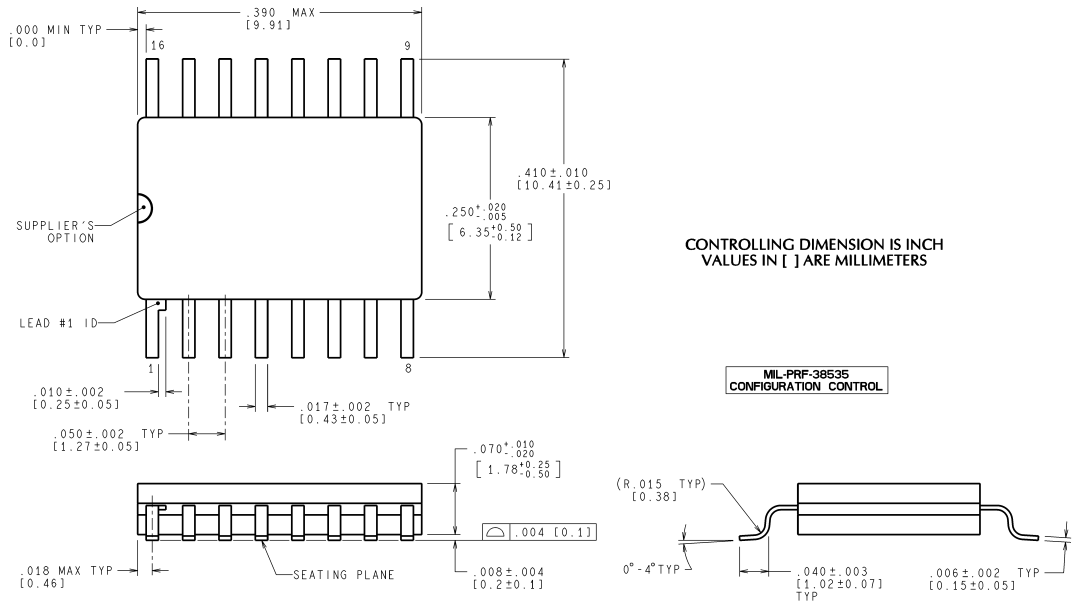

Order Number LM2941WG/883
LM2941WG-QMLV, 5962-9166701QYA
NS Package Number WG16A

Physical Dimensions inches (millimeters) unless otherwise noted (Continued)

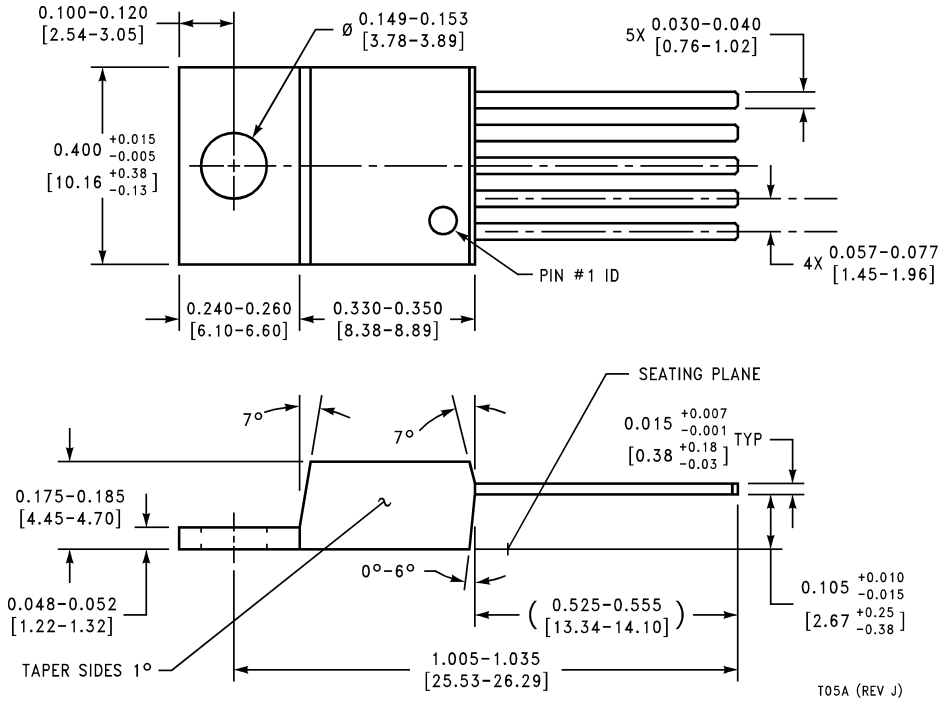

Order Number LM2941T or LM2941CT
NS Package Number T05A

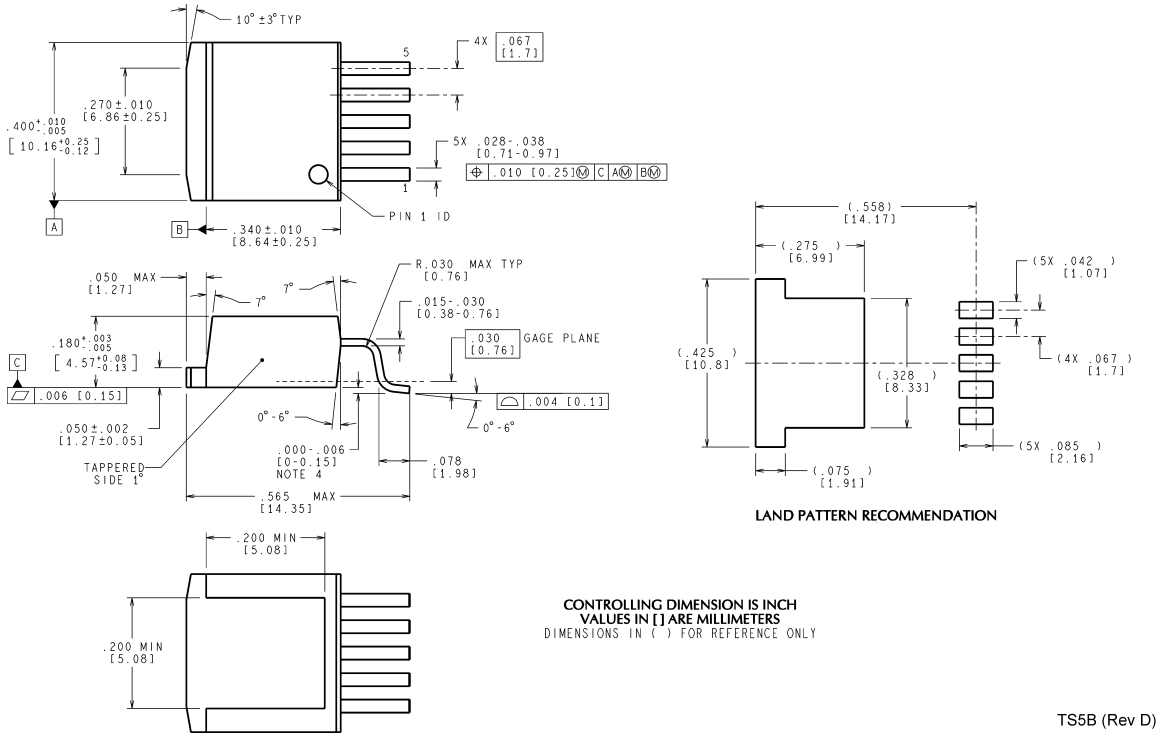

TO-263 5-Lead Plastic Surface Mount Package
Order Number LM2941S, LM2941SX, LM2941CS or LM2941CSX
NS Package Number TS5B

Physical Dimensions inches (millimeters) unless otherwise noted (Continued)

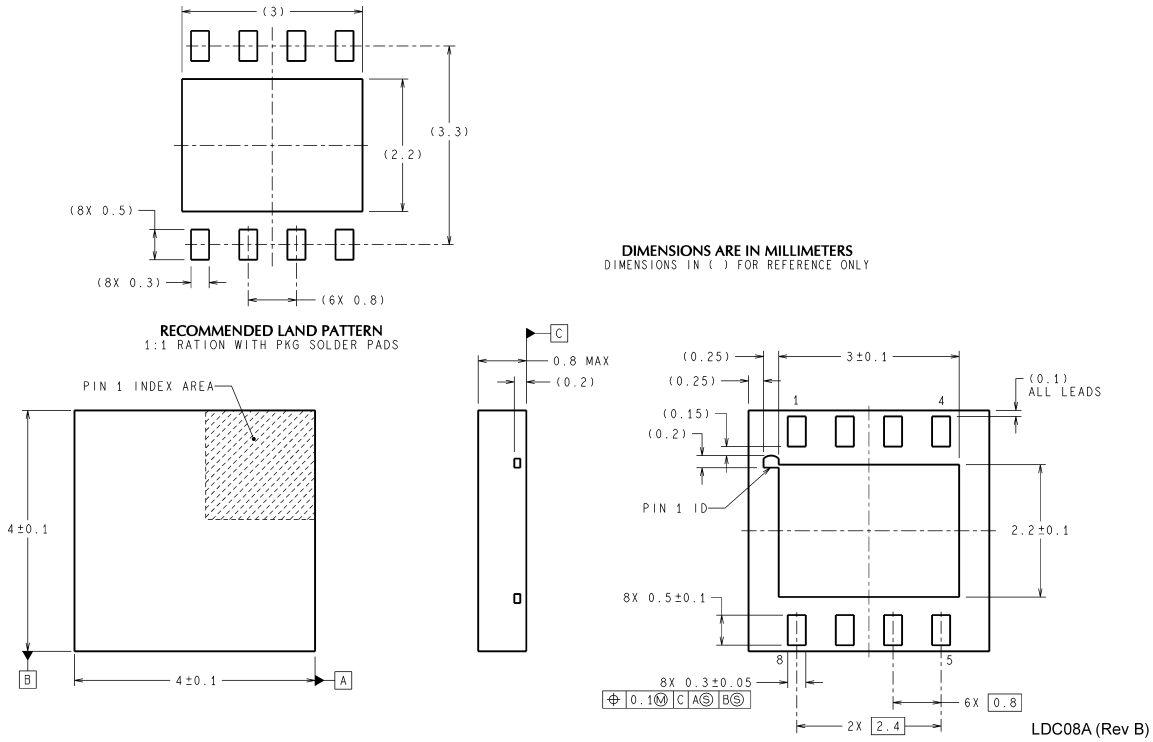

8-Lead LLP Surface Mount Package
Order Number LM2941LD, LM2941LDX
NS Package Number LDC08A

National does not assume any responsibility for use of any circuitry described, no circuit patent licenses are implied and National reserves the right at any time without notice to change said circuitry and specifications.

For the most current product information visit us at www.national.com.

LIFE SUPPORT POLICY

NATIONAL'S PRODUCTS ARE NOT AUTHORIZED FOR USE AS CRITICAL COMPONENTS IN LIFE SUPPORT DEVICES OR SYSTEMS WITHOUT THE EXPRESS WRITTEN APPROVAL OF THE PRESIDENT AND GENERAL COUNSEL OF NATIONAL SEMICONDUCTOR CORPORATION. As used herein:

1. Life support devices or systems are devices or systems which, (a) are intended for surgical implant into the body, or (b) support or sustain life, and whose failure to perform when properly used in accordance with instructions for use provided in the labeling, can be reasonably expected to result in a significant injury to the user.
2. A critical component is any component of a life support device or system whose failure to perform can be reasonably expected to cause the failure of the life support device or system, or to affect its safety or effectiveness.

BANNED SUBSTANCE COMPLIANCE

National Semiconductor manufactures products and uses packing materials that meet the provisions of the Customer Products Stewardship Specification (CSP-9-111C2) and the Banned Substances and Materials of Interest Specification (CSP-9-111S2) and contain no ''Banned Substances'' as defined in CSP-9-111S2.

Leadfree products are RoHS compliant.

National Semiconductor
Americas Customer
Support Center
Email: new.feedback@nsc.com
Tel: 1-800-272-9959

www.national.com

National Semiconductor
Europe Customer Support Center
Fax: +49 (0) 180-530 85 86
Email: europe.support@nsc.com
Deutsch Tel: +49 (0) 69 9508 6208
English Tel: +44 (0) 870 24 0 2171
Français Tel: +33 (0) 1 41 91 8790

National Semiconductor
Asia Pacific Customer
Support Center
Email: ap.support@nsc.com

National Semiconductor
Japan Customer Support Center
Fax: 81-3-5639-7507
Email: jpn.feedback@nsc.com
Tel: 81-3-5639-7560

ENTEGRECİ

Bu belge www.entegreci.com üzerinden sunulmaktadır.

Elektronik komponent tedarikinde Entegreci

Entegreci, Eskişehir merkezli, Türkiye geneline satış yapan bir elektronik komponent mağazasıdır. Entegreler (IC), mikrodenetleyiciler, transistörler, diyotlar, pasif elemanlar, konnektörler, modüller ve geliştirme kartları tek adetten seri üretim adetlerine kadar satılır. Ürün sayfalarında güncel stok durumunu, fiyatı ve datasheet bağlantısını bulabilirsiniz.

Parça koduyla arama

Üretici parça numarasını yazın; stok ve fiyatı hemen görün.

www.entegreci.com

Ürün kategorileri

Entegreden kapasitöre tüm elektronik komponent kategorileri.

Kategorilere göz atın

Üreticiler

Aradığınız üreticinin ürünlerini tek sayfada inceleyin.

Üreticileri görün

Toplu alım ve teklif

Listede olmayan ya da yüksek adetli parçalar için teklif isteyin.

Teklif isteyin

www.entegreci.com | **destek@entegreci.com** | **0850 305 90 34**

Entegreci is an online electronic components store based in Türkiye. Search by manufacturer part number to see stock, prices and datasheets for integrated circuits, microcontrollers, transistors, passive components and connectors, or request a quote for parts that are not listed.

Bu sayfa Entegreci tarafından eklenmiştir. Belgenin önceki sayfaları asıl yayıncısına aittir ve içeriği değiştirilmemiştir; en güncel sürüm için belgenin yayıncısına başvurun.