LM193, A
LM293, A - LM393, A

Low Power Dual Voltage Comparators

- **Wide single supply voltage range or dual supplies : +2V to +36V or ±1V to ±18V**
- **Very low supply current (0.4mA) independent of supply voltage (1mW/ comparator at +5V)**
- **Low input bias current: 25nA typ.**
- **Low input offset current: ±5nA typ.**
- **Low input offset voltage: ±1mV typ.**
- **Input common-mode voltage range includes ground**
- **Low output saturation voltage: 250mV typ. (Io = 4mA)**
- **Differential input voltage range equal to the supply voltage**
- **TTL, DTL, ECL, MOS, CMOS compatible outputs**



N
DIP-8 (Plastic Package)



D
SO-8 (Plastic Micropackage)



P
TSSOP8 (Thin Shrink Small Outline Package)



S
Mini SO-8 (Plastic Micropackage)

Description

These devices consist of two independent low voltage comparators designed specifically to operate from a single supply over a wide range of voltages. Operation from split power supplies is also possible.

These comparators also have a unique characteristic in that the input common-mode voltage range includes ground even though operated from a single power supply voltage.

Pin Connections (top view)

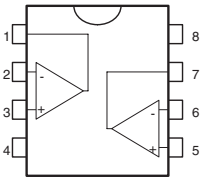

1 - Output 1
2 - Inverting input 1
3 - Non-inverting input 1
4 - V_{CC}^-
5 - Non-inverting input 2
6 - Inverting input 2
7 - Output 2
8 - V_{CC}^+

Order Code

Part Number	Temperature Range	Package	Packaging
LM193AD/LM193ADT	-55°C, +125°C	SO	Tube or Tape & Reel
LM193AN		DIP	Tube
LM193D/LM193DT		SO	Tube or Tape & Reel
LM193N		DIP	Tube
LM293AD/LM293ADT	-40°C, +105°C	SO	Tube or Tape & Reel
LM293AN		DIP	Tube
LM293D/LM293DT		SO	Tube or Tape & Reel
LM293N		DIP	Tube
LM293PT		TSSOP (Thin Shrink Outline Package)	Tape & Reel
LM293ST		Mini SO	Tape & Reel
LM393AD/LM393ADT	0°C, +70°C	SO	Tube or Tape & Reel
LM393D/LM393DT		SO	Tube or Tape & Reel
LM393N		DIP	Tube
LM393PT		TSSOP (Thin Shrink Outline Package)	Tape & Reel
LM393ST		Mini SO	Tape & Reel

1 Schematic Diagram (1/2 LM193)

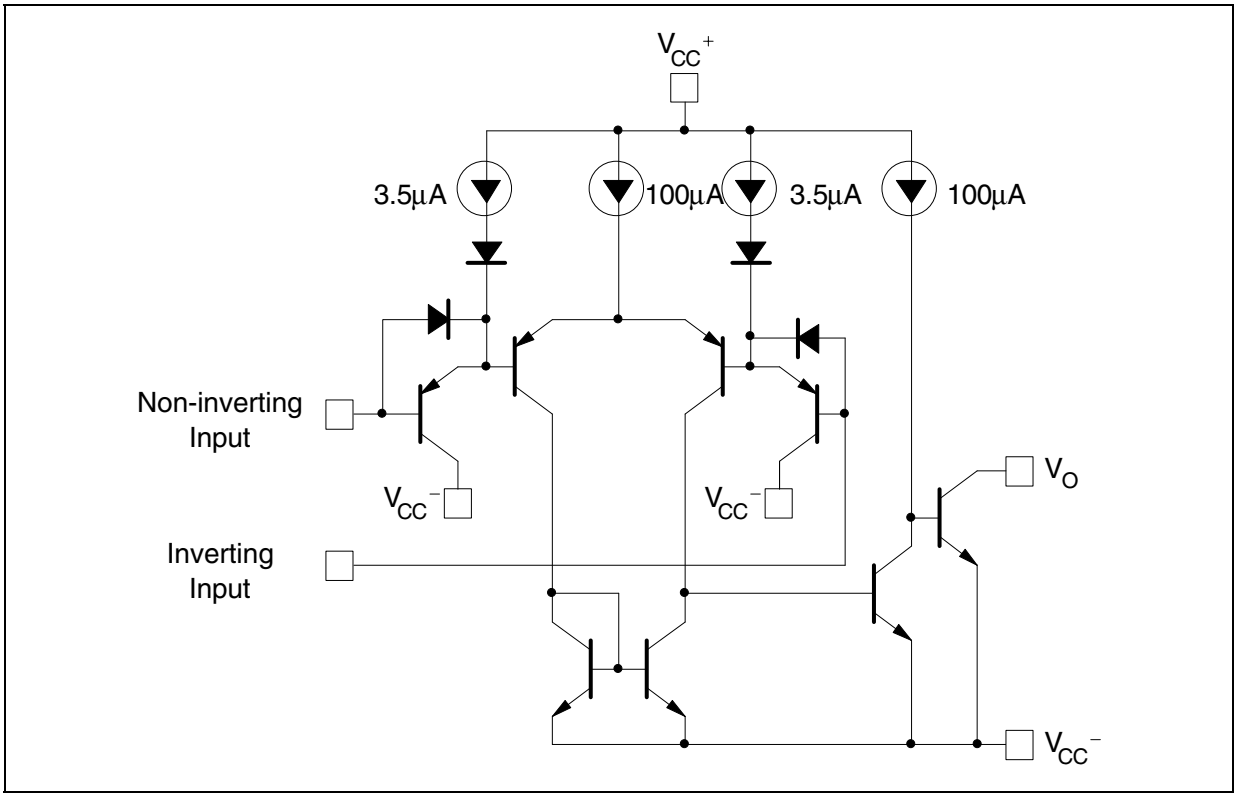

2 Absolute Maximum Ratings

Table 1. Key parameters and their absolute maximum ratings

Symbol	Parameter		Value	Unit
Vcc	Supply voltage		±18 or 36	V
V_{id}	Differential Input Voltage		±36	V
Vi	Input Voltage		-0.3 to +36	V
	Output Short-circuit to Ground - note [1]		Infinite	
P_d	Power Dissipation [2]	DIP-8 SO-8 TSSOP8 Mini SO-8	1250 710 625 580	mW
T_{stg}	Storage Temperature Range		-65 to +150	°C

1) Short-circuits from the output to V_{CC}^+ can cause excessive heating and eventual destruction. The maximum output current is approximately 20mA independent of the magnitude of V_{CC}^+.

2) Pd is calculated with T_{amb} = +25°C, T_j = +150°C and R_{thja} = 100°C/W for DIP8 package
= 175°C/W for SO8 package
= 200°C/W for TSSOP8 package
= 215°C/W for Mini SO8 package

Table 2. Operating Conditions

Symbol	Parameter		Value	Unit
V_{icm}	Common Mode Input Voltage Range		0 to V_{CC}^+ -1.5	V
T_{oper}	Operating Free-Air Temperature range	LM193, A LM293, A LM393, A	-55 to +125 -40 to +125 0 to +70	°C

3 Electrical Characteristics

Table 3. V_{CC}^+ = +5V, V_{CC}^-= 0V, T_{amb} = +25°C (unless otherwise specified)

Symbol	Parameter	LM193A - LM293A LM393A			LM193- LM293 LM393			Unit
		Min.	Typ.	Max.	Min	Typ.	Max.	
V_{io}	Input Offset Voltage - note [1] T_{amb} = +25°C $T_{min} \le T_{amb} \le T_{max}$		1	2 4		1	5 9	mV
I_{io}	Input Offset Current T_{amb} = +25°C $T_{min} \le T_{amb} \le T_{max}$		3	25 100		5	50 150	nA
I_{ib}	Input Bias Current (I^+ or I^-) - note [2] T_{amb} = +25°C $T_{min} \le T_{amb} \le T_{max}$		25	100 300		25	250 400	nA
A_{vd}	Large Signal Voltage Gain V_{CC} = 15V, R_L = 15kΩ, V_o = 1V to 11V	50	200		50	200		V/mV
I_{CC}	Supply Current (all comparators) V_{CC} = +5V, no load V_{CC} = +30V, no load		0.4 1	1 2.5		0.4 1	1 2.5	mA
V_{icm}	Input Common Mode Voltage Range - note [3] V_{CC} = 30V T_{amb} = +25°C $T_{min} \le T_{amb} \le T_{max}$	0 0		V_{CC}^+ -1.5 V_{CC}^+ -2	0 0		V_{CC}^+ -1.5 V_{CC}^+ -2	V
V_{id}	Differential Input Voltage -note [4]			V_{CC}^+			V_{CC}^+	
V_{OL}	Low Level Output Voltage V_{id} = -1V, I_{sink} = 4mA T_{amb} = +25°C $T_{min} \le T_{amb} \le T_{max}$		250	400 700		250	400 700	V
I_{OH}	High Level Output Current (V_{id} = 1V) V_{CC} = V_o = 30V T_{amb} = +25°C $T_{min} \le T_{amb} \le T_{max}$		0.1	 1		0.1	 1	nA µA
I_{SINK}	Output Sink Currrent V_{id}= 1V, V_o = 1.5V	6	16		6	16		mA
tre	Response Time - note [5] R_L= 5.1kΩ connected to V_{CC}^+		1.3			1.3		µs
trel	Large Signal Response Time R_L= 5.1kΩ connected to V_{CC}^+, e_l = TTL, $V_{(ref)}$ = +1.4v		300			300		ns

1) At output switch point, $V_o \approx$ 1.4V, R_s = 0 with V_{CC}^+ from 5V to 30V, and over the full common-mode range (0V to V_{CC}^+ -1.5V).

2) The direction of the input current is out of the IC due to the PNP input stage. This current is essentially constant, independent of the state of the output, so no loading charge exists on the reference of input lines.

3) The input common-mode voltage of either input signal voltage should not be allowed to go negative by more than 0.3V. The upper end of the common-mode voltage range is V_{CC}^+ -1.5V, but either or both inputs can go to +30V without damage.

4) The response time specified is for a 100mV input step with 5mV overdrive. For larger overdrive signals 300ns can be obtained.

5) Posistive excursions of input voltage may exceed the power supply level. As long as the other voltage remains within the common-mode range, the comparator will provide a proper output state. The low input voltage state must not be less than -0.3V (or 0.3V bellow the negative power supply, if used).

Figure 1. Supply current vs. supply voltage

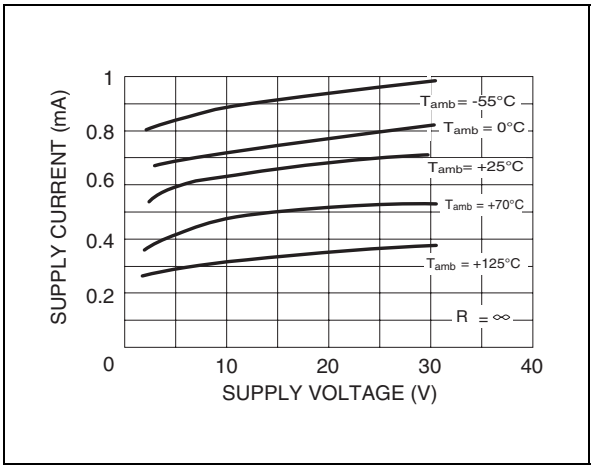

Figure 2. Output saturation voltage vs. output current

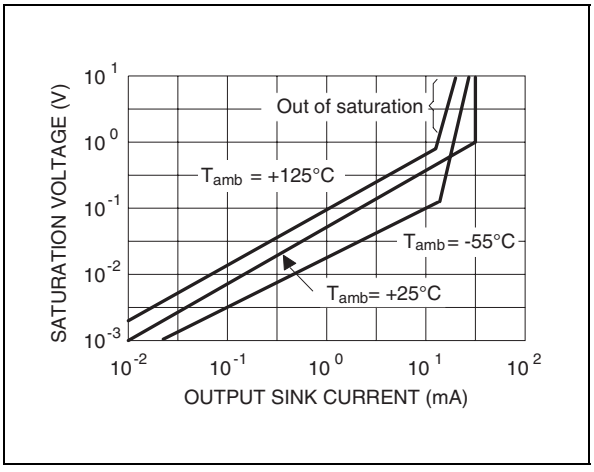

Figure 3. Response time for various input overdrives - positive transition

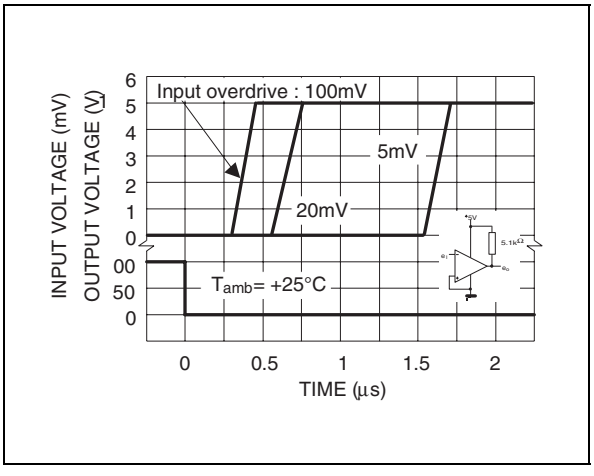

Figure 4. Input current vs. supply voltage

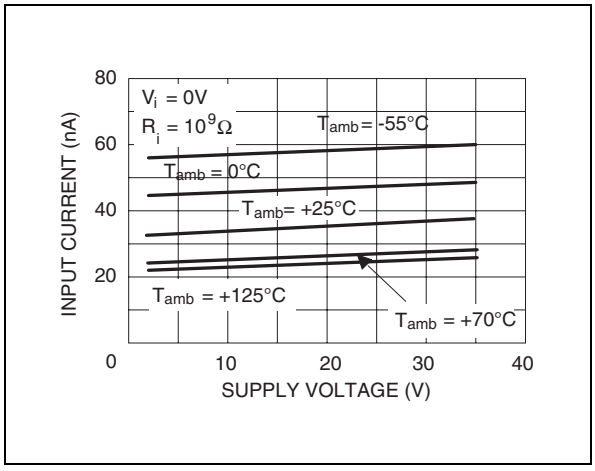

Figure 5. Response time for various input overdrives - negative transition

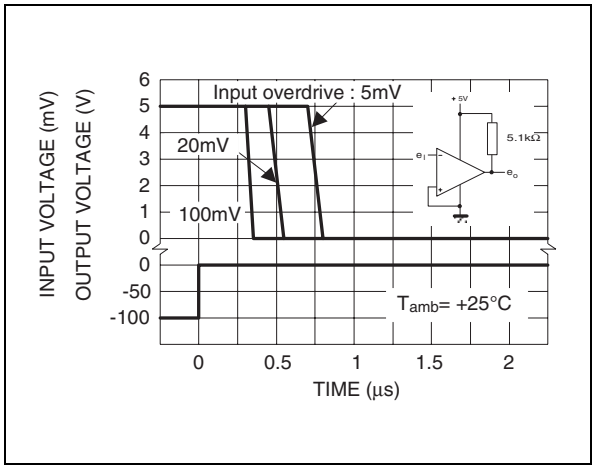

4 Typical Applications

Figure 6. Basic comparator

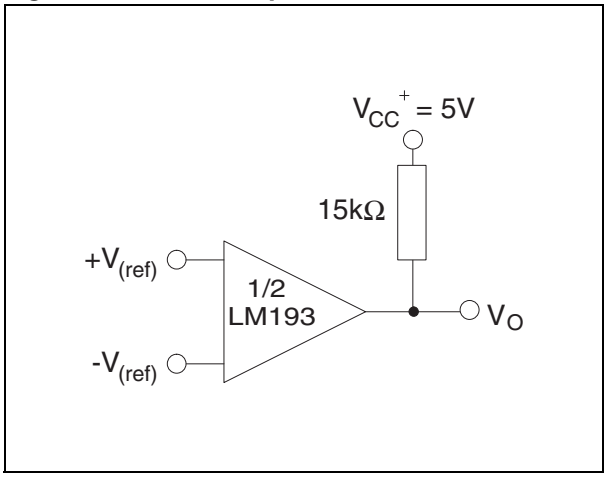

Figure 7. driving TTL

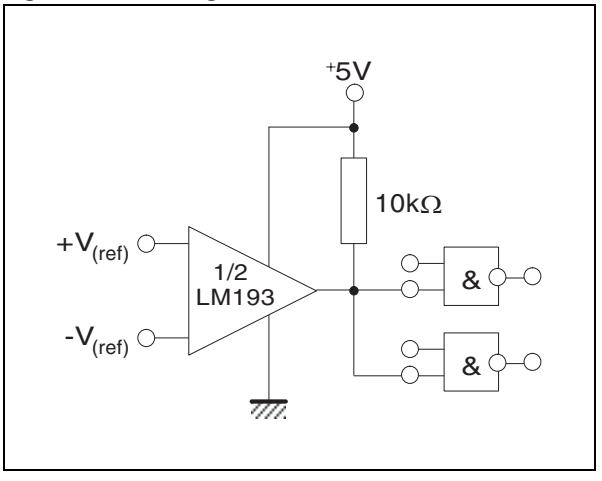

Figure 8. Low frequency op-amp

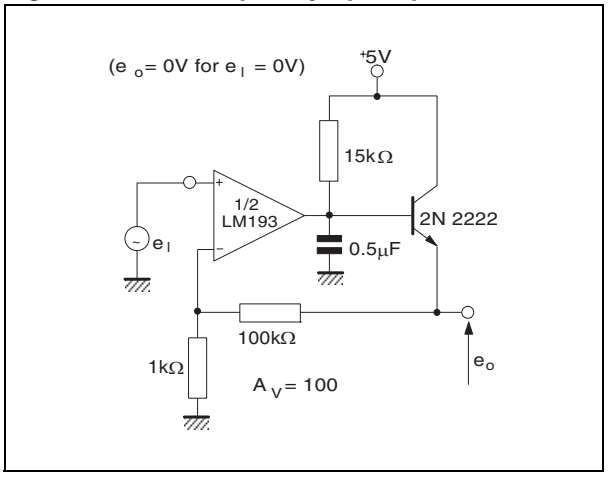

Figure 9. Driving CMOS

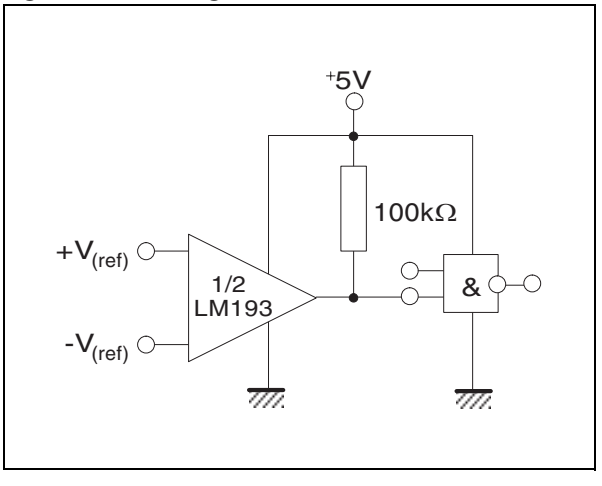

Figure 10. Low frequency op-amp

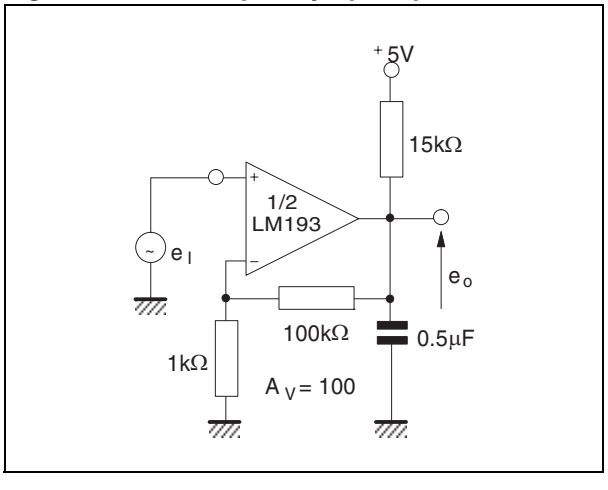

Figure 11. Transducer amplifier

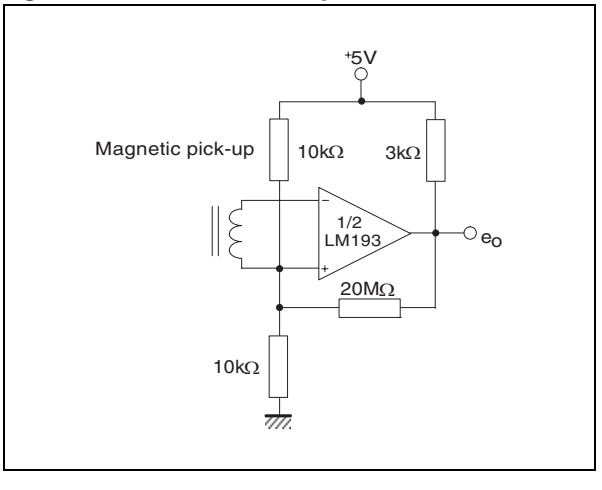

Figure 12. Low frequency op-amp with offset adjust

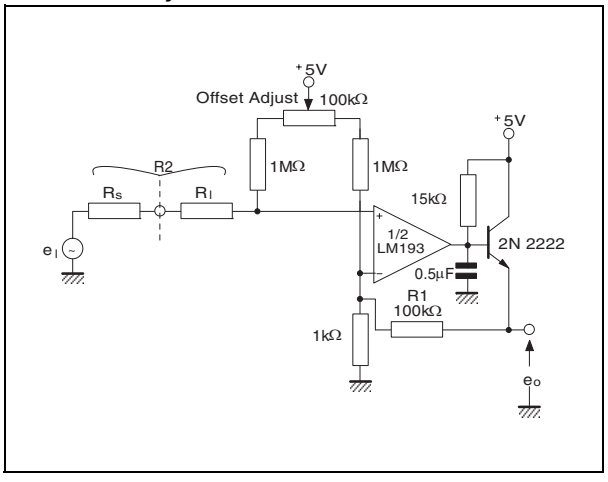

Figure 13. Zero crossing detector (single power supply)

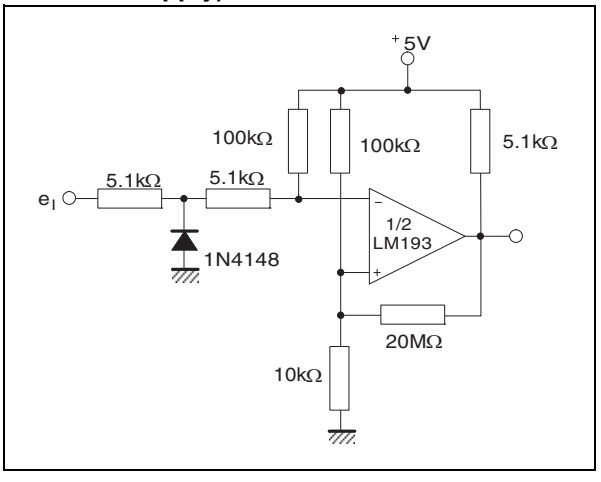

Figure 14. Two-decade high-frequency VCO

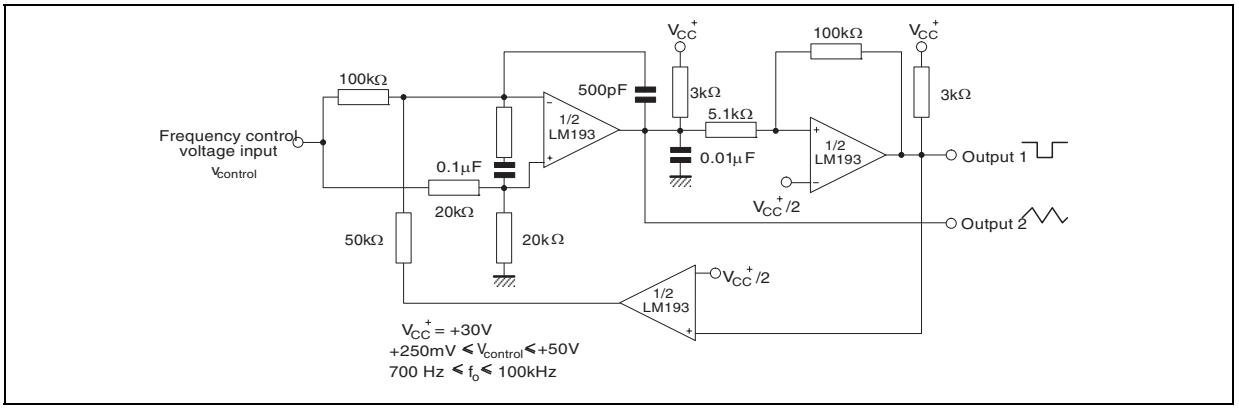

Figure 15. Limit comparator

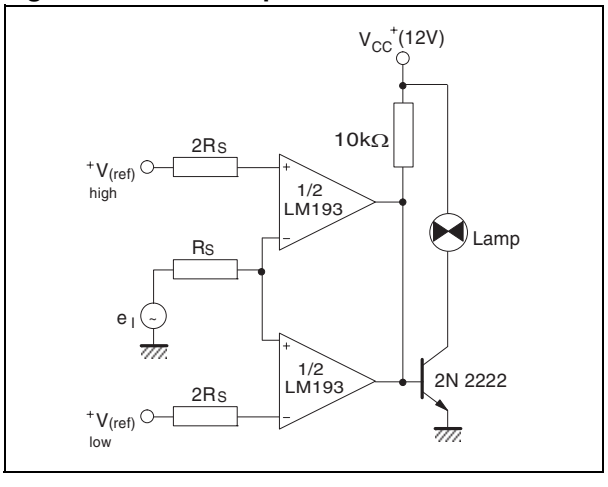

Figure 16. Crystal controlled oscillator

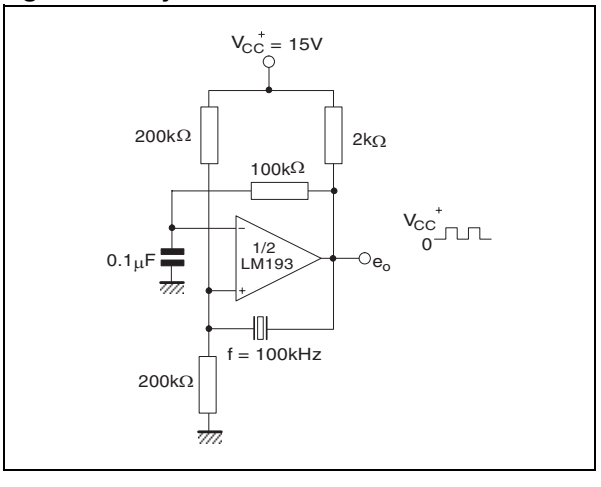

Figure 17. Split-supply applications - zero crossing detector

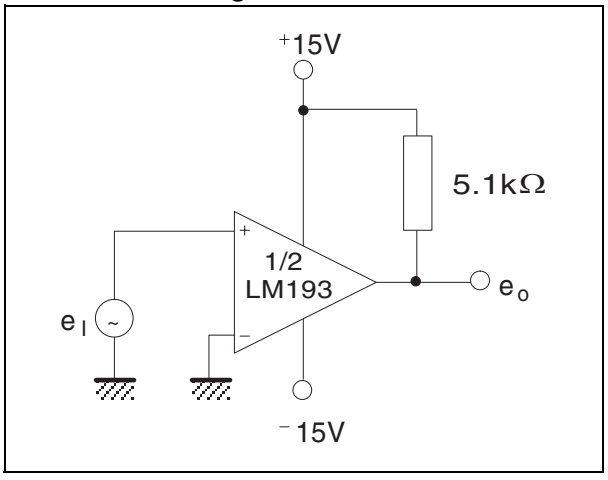

Figure 18. Comparator with a negative reference

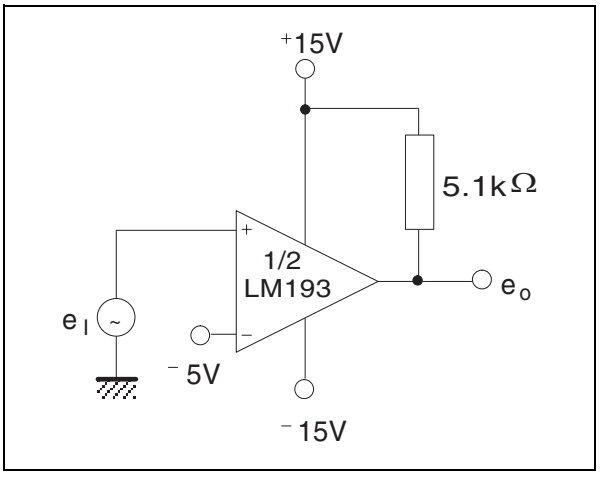

5 Package Mechanical Data

Plastic DIP-8 MECHANICAL DATA

DIM.	mm.			inch		
	MIN.	TYP	MAX.	MIN.	TYP.	MAX.
A		3.3			0.130	
a1	0.7			0.028		
B	1.39		1.65	0.055		0.065
B1	0.91		1.04	0.036		0.041
b		0.5			0.020	
b1	0.38		0.5	0.015		0.020
D			9.8			0.386
E		8.8			0.346	
e		2.54			0.100	
e3		7.62			0.300	
e4		7.62			0.300	
F			7.1			0.280
I			4.8			0.189
L		3.3			0.130	
Z	0.44		1.6	0.017		0.063

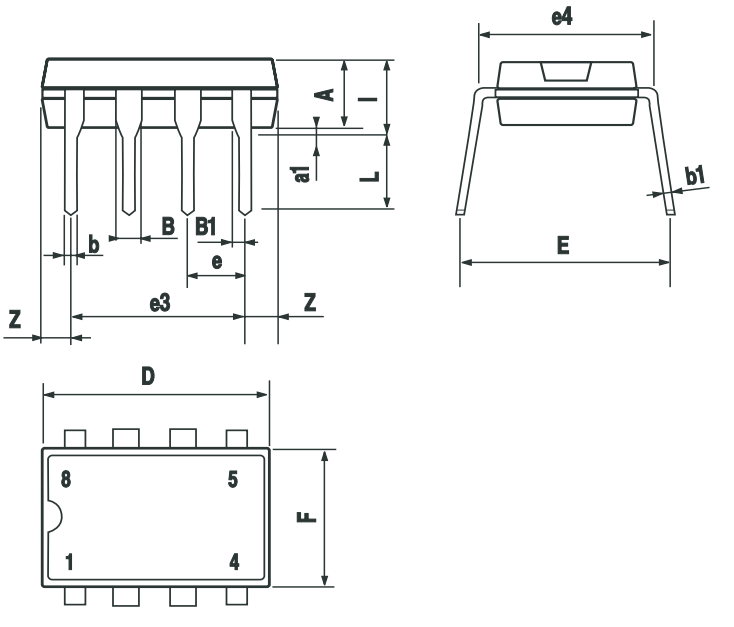

P001F

SO-8 MECHANICAL DATA

DIM.	mm.			inch		
	MIN.	TYP	MAX.	MIN.	TYP.	MAX.
A	1.35		1.75	0.053		0.069
A1	0.10		0.25	0.04		0.010
A2	1.10		1.65	0.043		0.065
B	0.33		0.51	0.013		0.020
C	0.19		0.25	0.007		0.010
D	4.80		5.00	0.189		0.197
E	3.80		4.00	0.150		0.157
e		1.27			0.050	
H	5.80		6.20	0.228		0.244
h	0.25		0.50	0.010		0.020
L	0.40		1.27	0.016		0.050
k	8° (max.)					
ddd			0.1			0.04

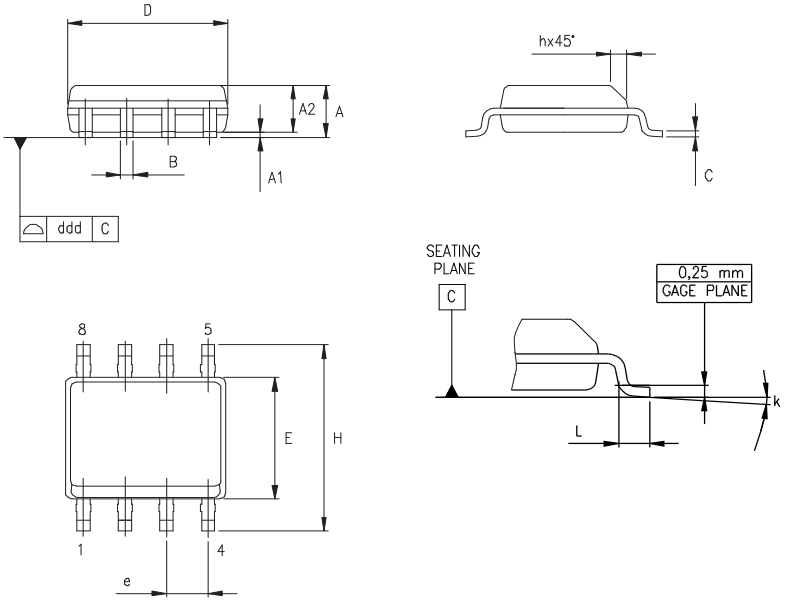

0016023/C

TSSOP8 MECHANICAL DATA

DIM.	mm.			inch		
	MIN.	TYP	MAX.	MIN.	TYP.	MAX.
A			1.2			0.047
A1	0.05		0.15	0.002		0.006
A2	0.80	1.00	1.05	0.031	0.039	0.041
b	0.19		0.30	0.007		0.012
c	0.09		0.20	0.004		0.008
D	2.90	3.00	3.10	0.114	0.118	0.122
E	6.20	6.40	6.60	0.244	0.252	0.260
E1	4.30	4.40	4.50	0.169	0.173	0.177
e		0.65			0.0256	
K	0°		8°	0°		8°
L	0.45	0.60	0.75	0.018	0.024	0.030
L1		1			0.039	

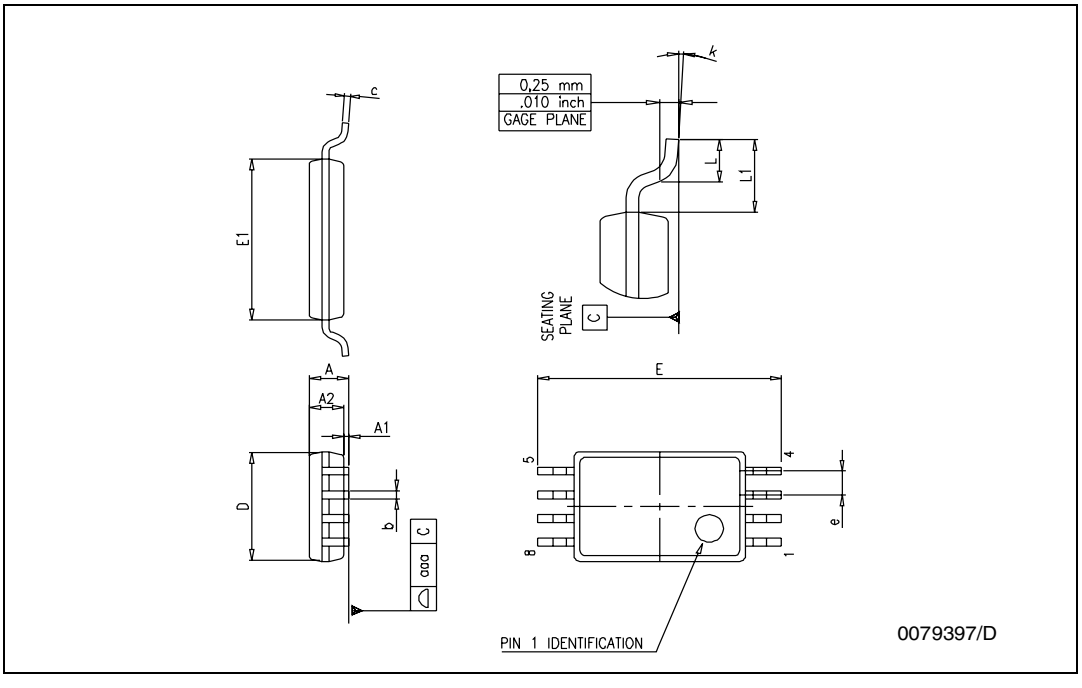

miniSO-8 MECHANICAL DATA

DIM.	mm.			inch		
	MIN.	TYP	MAX.	MIN.	TYP.	MAX.
A			1.1			0.043
A1	0.05	0.10	0.15	0.002	0.004	0.006
A2	0.78	0.86	0.94	0.031	0.031	0.037
b	0.25	0.33	0.40	0.010	0.13	0.013
c	0.13	0.18	0.23	0.005	0.007	0.009
D	2.90	3.00	3.10	0.114	0.118	0.122
E	4.75	4.90	5.05	0.187	0.193	0.199
E1	2.90	3.00	3.10	.0114	0.118	0.122
e		0.65			0.026	
K	0°		6°	0°		6°
L	0.40	0.55	0.70	0.016	0.022	0.028
L1			0.10			0.004

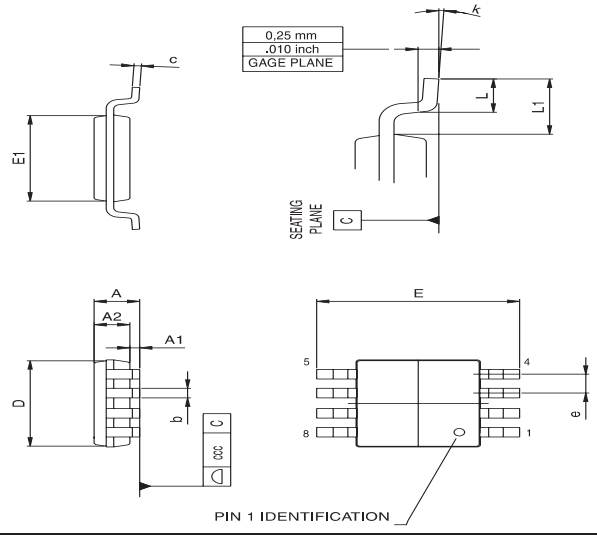

6 Revision History

Date	Revision	Description of Changes
01 July 2002	1	First Release
01 Jan. 2005	2	Class A of the product included in the datasheet.

Information furnished is believed to be accurate and reliable. However, STMicroelectronics assumes no responsibility for the consequences of use of such information nor for any infringement of patents or other rights of third parties which may result from its use. No license is granted by implication or otherwise under any patent or patent rights of STMicroelectronics. Specifications mentioned in this publication are subject to change without notice. This publication supersedes and replaces all information previously supplied. STMicroelectronics products are not authorized for use as critical components in life support devices or systems without express written approval of STMicroelectronics.

The ST logo is a registered trademark of STMicroelectronics
All other names are the property of their respective owners

© 2005 STMicroelectronics - All rights reserved

STMicroelectronics group of companies
Australia - Belgium - Brazil - Canada - China - Czech Republic - Finland - France - Germany - Hong Kong - India - Israel - Italy - Japan - Malaysia - Malta - Morocco - Singapore - Spain - Sweden - Switzerland - United Kingdom - United States of America
www.st.com

ENTEGRECİ

Bu belge www.entegreci.com üzerinden sunulmaktadır.

Elektronik komponent tedarikinde Entegreci

Entegreci, Eskişehir merkezli, Türkiye geneline satış yapan bir elektronik komponent mağazasıdır. Entegreler (IC), mikrodenetleyiciler, transistörler, diyotlar, pasif elemanlar, konnektörler, modüller ve geliştirme kartları tek adetten seri üretim adetlerine kadar satılır. Ürün sayfalarında güncel stok durumunu, fiyatı ve datasheet bağlantısını bulabilirsiniz.

Parça koduyla arama

Üretici parça numarasını yazın; stok ve fiyatı hemen görün.

www.entegreci.com

Ürün kategorileri

Entegreden kapasitöre tüm elektronik komponent kategorileri.

Kategorilere göz atın

Üreticiler

Aradığınız üreticinin ürünlerini tek sayfada inceleyin.

Üreticileri görün

Toplu alım ve teklif

Listede olmayan ya da yüksek adetli parçalar için teklif isteyin.

Teklif isteyin

www.entegreci.com | **destek@entegreci.com** | **0850 305 90 34**

Entegreci is an online electronic components store based in Türkiye. Search by manufacturer part number to see stock, prices and datasheets for integrated circuits, microcontrollers, transistors, passive components and connectors, or request a quote for parts that are not listed.

Bu sayfa Entegreci tarafından eklenmiştir. Belgenin önceki sayfaları asıl yayıncısına aittir ve içeriği değiştirilmemiştir; en güncel sürüm için belgenin yayıncısına başvurun.