Distributed by:

JAMECO® ELECTRONICS

www.Jameco.com ✦ 1-800-831-4242

The content and copyrights of the attached material are the property of its owner.

Jameco Part Number 838621

May 1998

National Semiconductor

LM138/LM338
5-Amp Adjustable Regulators

General Description

The LM138 series of adjustable 3-terminal positive voltage regulators is capable of supplying in excess of 5A over a 1.2V to 32V output range. They are exceptionally easy to use and require only 2 resistors to set the output voltage. Careful circuit design has resulted in outstanding load and line regulation — comparable to many commercial power supplies. The LM138 family is supplied in a standard 3-lead transistor package.

A unique feature of the LM138 family is time-dependent current limiting. The current limit circuitry allows peak currents of up to 12A to be drawn from the regulator for short periods of time. This allows the LM138 to be used with heavy transient loads and speeds start-up under full-load conditions. Under sustained loading conditions, the current limit decreases to a safe value protecting the regulator. Also included on the chip are thermal overload protection and safe area protection for the power transistor. Overload protection remains functional even if the adjustment pin is accidentally disconnected.

Normally, no capacitors are needed unless the device is situated more than 6 inches from the input filter capacitors in which case an input bypass is needed. An output capacitor can be added to improve transient response, while bypassing the adjustment pin will increase the regulator's ripple rejection.

Besides replacing fixed regulators or discrete designs, the LM138 is useful in a wide variety of other applications. Since the regulator is "floating" and sees only the input-to-output differential voltage, supplies of several hundred volts can be regulated as long as the maximum input to output differential is not exceeded, i.e., do not short-circuit output to ground. The part numbers in the LM138 series which have a K suffix are packaged in a standard Steel TO-3 package, while those with a T suffix are packaged in a TO-220 plastic package. The LM138 is rated for $-55^{\circ}C \leq T_J \leq +150^{\circ}C$, and the LM338 is rated for $0^{\circ}C \leq T_J \leq +125^{\circ}C$.

Features

- Guaranteed 7A peak output current
- Guaranteed 5A output current
- Adjustable output down to 1.2V
- Guaranteed thermal regulation
- Current limit constant with temperature
- P^+ Product Enhancement tested
- Output is short-circuit protected

Applications

- Adjustable power supplies
- Constant current regulators
- Battery chargers

Connection Diagrams (See Physical Dimension section for further information)

(TO-3 STEEL)
Metal Can Package

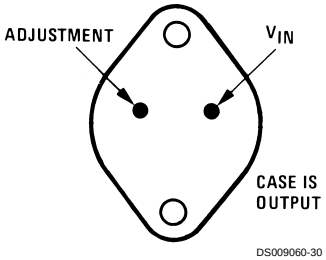

Bottom View
Order Number LM138K STEEL or LM338K STEEL
See NS Package Number K02A

(TO-220)
Plastic Package

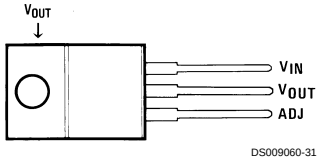

Front View
Order Number LM338T
See NS Package Number T03B

© 1999 National Semiconductor Corporation

Absolute Maximum Ratings (Note 1)

If Military/Aerospace specified devices are required, please contact the National Semiconductor Sales Office/ Distributors for availability and specifications.

(Note 4)

Power Dissipation	Internally limited
Input/Output Voltage Differential	+40V, −0.3V
Storage Temperature	−65˚C to +150˚C
Lead Temperature	
Metal Package (Soldering, 10 seconds)	300˚C
Plastic Package (Soldering, 4 seconds)	260˚C
ESD Tolerance	TBD

Operating Temperature Range

LM138	$-55^{\circ}C \le T_J \le +150^{\circ}C$
LM338	$0^{\circ}C \le T_J \le +125^{\circ}C$

Electrical Characteristics

Specifications with standard type face are for T_J = 25˚C, and those with **boldface type** apply over **full Operating Temperature Range.** Unless otherwise specified, $V_{IN} - V_{OUT}$ = 5V; and I_{OUT} = 10 mA. (Note 2)

Symbol	Parameter	Conditions	LM138			Units
			Min	Typ	Max	
V_{REF}	Reference Voltage	$3V \le (V_{IN} - V_{OUT}) \le 35V$, $10\ mA \le I_{OUT} \le 5A$, $P \le 50W$	**1.19**	**1.24**	**1.29**	V
V_{RLINE}	Line Regulation	$3V \le (V_{IN} - V_{OUT}) \le 35V$ (Note 3)		0.005	0.01	%/V
				0.02	**0.04**	%/V
V_{RLOAD}	Load Regulation	$10\ mA \le I_{OUT} \le 5A$ (Note 3)		0.1	0.3	%
				0.3	**0.6**	%
	Thermal Regulation	20 ms Pulse		0.002	0.01	%/W
I_{ADJ}	Adjustment Pin Current			**45**	**100**	µA
ΔI_{ADJ}	Adjustment Pin Current Change	$10\ mA \le I_{OUT} \le 5A$, $3V \le (V_{IN} - V_{OUT}) \le 35V$		**0.2**	**5**	µA
$\Delta V_{R/T}$	Temperature Stability	$T_{MIN} \le T_J \le T_{MAX}$		**1**		%
I_{LOAD}(Min)	Minimum Load Current	$V_{IN} - V_{OUT}$ = 35V		**3.5**	**5**	mA
I_{CL}	Current Limit	$V_{IN} - V_{OUT} \le 10V$				
		DC	**5**	**8**		A
		0.5 ms Peak	**7**	**12**		A
		$V_{IN} - V_{OUT}$ = 30V		1	1	A
V_N	RMS Output Noise, % of V_{OUT}	10 Hz ≤ f ≤ 10 kHz		0.003		%
$\frac{\Delta V_R}{\Delta V_{IN}}$	Ripple Rejection Ratio	V_{OUT} = 10V, f = 120 Hz, C_{ADJ} = 0 µF		**60**		dB
		V_{OUT} = 10V, f = 120 Hz, C_{ADJ} = 10 µF	**60**	**75**		dB
	Long-Term Stability	T_J = 125˚C, 1000 Hrs		0.3	1	%
θ_{JC}	Thermal Resistance, Junction to Case	K Package			1	˚C/W
θ_{JA}	Thermal Resistance, Junction to Ambient (No Heat Sink)	K Package		35		˚C/W

Electrical Characteristics

Symbol	Parameter	Conditions	LM338			Units
			Min	Typ	Max	
V_{REF}	Reference Voltage	$3V \le (V_{IN} - V_{OUT}) \le 35V$, $10\ mA \le I_{OUT} \le 5A$, $P \le 50W$	**1.19**	**1.24**	**1.29**	V
V_{RLINE}	Line Regulation	$3V \le (V_{IN} - V_{OUT}) \le 35V$ (Note 3)		0.005	0.03	%/V
				0.02	**0.06**	%/V
V_{RLOAD}	Load Regulation	$10\ mA \le I_{OUT} \le 5A$ (Note 3)		0.1	0.5	%
				0.3	**1**	%
	Thermal Regulation	20 ms Pulse		0.002	0.02	%/W
I_{ADJ}	Adjustment Pin Current			**45**	**100**	µA
ΔI_{ADJ}	Adjustment Pin Current Change	$10\ mA \le I_{OUT} \le 5A$, $3V \le (V_{IN} - V_{OUT}) \le 35V$		**0.2**	**5**	µA

Electrical Characteristics (Continued)

Symbol	Parameter	Conditions	LM338			Units
			Min	Typ	Max	
$\Delta V_{R/T}$	Temperature Stability	$T_{MIN} \le T_J \le T_{MAX}$		**1**		%
I_{LOAD}(Min)	Minimum Load Current	$V_{IN} - V_{OUT}$ = 35V		**3.5**	**10**	mA
I_{CL}	Current Limit	$V_{IN} - V_{OUT} \le 10V$				
		DC	**5**	**8**		A
		0.5 ms Peak	**7**	**12**		A
		$V_{IN} - V_{OUT}$ = 30V			1	A
V_N	RMS Output Noise, % of V_{OUT}	10 Hz ≤ f ≤ 10 kHz		0.003		%
$\frac{\Delta V_R}{\Delta V_{IN}}$	Ripple Rejection Ratio	V_{OUT} = 10V, f = 120 Hz, C_{ADJ} = 0 µF		**60**		dB
		V_{OUT} = 10V, f = 120 Hz, C_{ADJ} = 10 µF	**60**	**75**		dB
	Long-Term Stability	T_J = 125˚C, 1000 hrs		0.3	1	%
θ_{JC}	Thermal Resistance	K Package			1	˚C/W
	Junction to Case	T Package			4	˚C/W
θ_{JA}	Thermal Resistance, Junction to	K Package		35		˚C/W
	Ambient (No Heat Sink)	T Package		50		˚C/W

Note 1: Absolute Maximum Ratings indicate limits beyond which damage to the device may occur. Operating Ratings indicate conditions for which the device is intended to be functional, but do not guarantee specific performance limits. For guaranteed specifications and test conditions, see the Electrical Characteristics.

Note 2: These specifications are applicable for power dissipations up to 50W for the TO-3 (K) package and 25W for the TO-220 (T) package. Power dissipation is guaranteed at these values up to 15V input-output differential. Above 15V differential, power dissipation will be limited by internal protection circuitry. All limits (i.e., the numbers in the Min. and Max. columns) are guaranteed to National's AOQL (Average Outgoing Quality Level).

Note 3: Regulation is measured at a constant junction temperature, using pulse testing with a low duty cycle. Changes in output voltage due to heating effects are covered under the specifications for thermal regulation.

Note 4: Refer to RETS138K drawing for military specifications of LM138K.

Typical Performance Characteristics

Current Limit

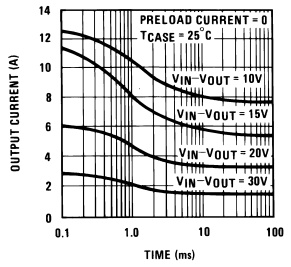

DS009060-32

Current Limit

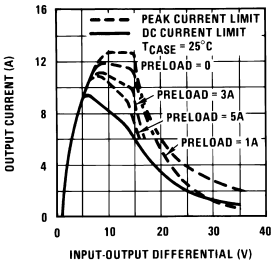

DS009060-33

Current Limit

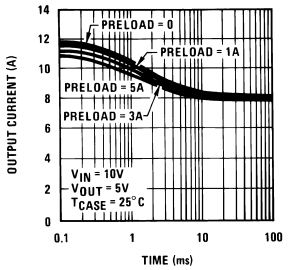

DS009060-34

Load Regulation

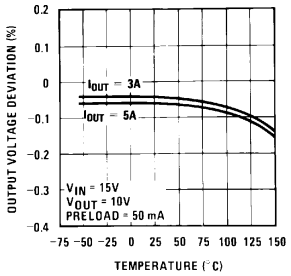

DS009060-35

Dropout Voltage

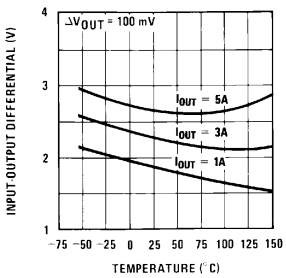

DS009060-36

Adjustment Current

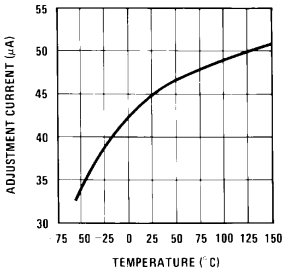

DS009060-37

Typical Performance Characteristics (Continued)

Temperature Stability

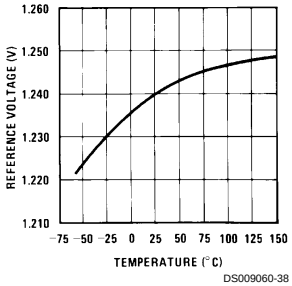

DS009060-38

Output Impedance

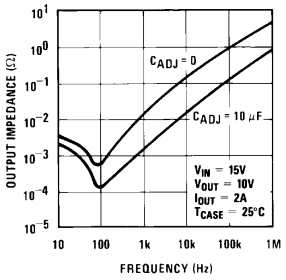

DS009060-39

Minimum Operating Current

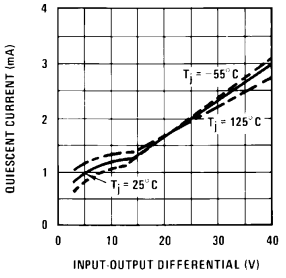

DS009060-40

Ripple Rejection

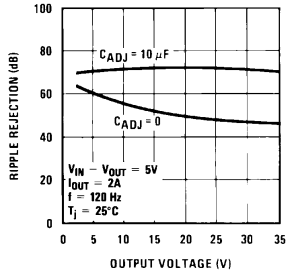

DS009060-41

Ripple Rejection

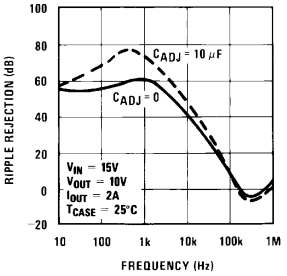

DS009060-42

Ripple Rejection

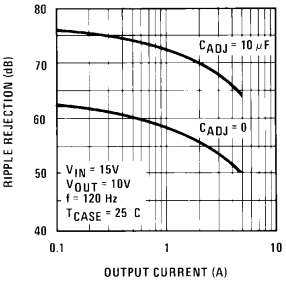

DS009060-43

Line Transient Response

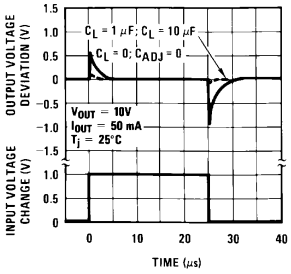

DS009060-44

Load Transient Response

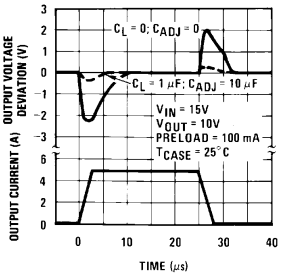

DS009060-45

Application Hints

In operation, the LM138 develops a nominal 1.25V reference voltage, V_{REF}, between the output and adjustment terminal. The reference voltage is impressed across program resistor R1 and, since the voltage is constant, a constant current I_1 then flows through the output set resistor R2, giving an output voltage of

$$V_{OUT} = V_{REF}\left(1 + \frac{R2}{R1}\right) + I_{ADJ}R2.$$

Application Hints (Continued)

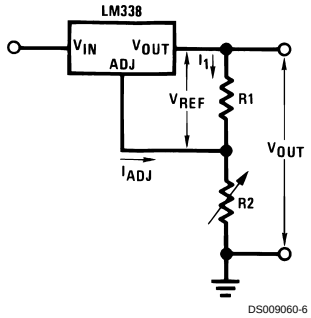

FIGURE 1.

Since the 50 µA current from the adjustment terminal represents an error term, the LM138 was designed to minimize I_{ADJ} and make it very constant with line and load changes. To do this, all quiescent operating current is returned to the output establishing a minimum load current requirement. If there is insufficient load on the output, the output will rise.

External Capacitors

An input bypass capacitor is recommended. A 0.1 µF disc or 1 µF solid tantalum on the input is suitable input bypassing for almost all applications. The device is more sensitive to the absence of input bypassiing when adjustment or output capacitors are used but the above values will eliminate the possiblity of problems.

The adjustment terminal can be bypassed to ground on the LM138 to improve ripple rejection. This bypass capacitor prevents ripple from being amplified as the output voltage is increased. With a 10 µF bypass capacitor 75 dB ripple rejection is obtainable at any output level. Increases over 20 µF do not appreciably improve the ripple rejection at frequencies above 120 Hz. If the bypass capacitor is used, it is sometimes necessary to include protection diodes to prevent the capacitor from discharging through internal low current paths and damaging the device.

In general, the best type of capacitors to use are solid tantalum. Solid tantalum capacitors have low impedance even at high frequencies. Depending upon capacitor construction, it takes about 25 µF in aluminum electrolytic to equal 1 µF solid tantalum at high frequencies. Ceramic capacitors are also good at high frequencies; but some types have a large decrease in capacitance at frequencies around 0.5 MHz. For this reason, 0.01 µF disc may seem to work better than a 0.1 µF disc as a bypass.

Although the LM138 is stable with no output capacitors, like any feedback circuit, certain values of external capacitance can cause excessive ringing. This occurs with values between 500 pF and 5000 pF. A 1 µF solid tantalum (or 25 µF aluminum electrolytic) on the output swamps this effect and insures stability.

Load Regulation

The LM138 is capable of providing extremely good load regulation but a few precautions are needed to obtain maximum performance. The current set resistor connected between the adjustment terminal and the output terminal (usually 240Ω) should be tied directly to the output of the regulator (case) rather than near the load. This eliminates line drops from appearing effectively in series with the reference and degrading regulation. For example, a 15V regulator with 0.05Ω resistance between the regulator and load will have a load regulation due to line resistance of 0.05Ω x I_L. If the set resistor is connected near the load the effective line resistance will be 0.05Ω (1 + R2/R1) or in this case, 11.5 times worse.

Figure 2 shows the effect of resistance between the regulator and 240Ω set resistor.

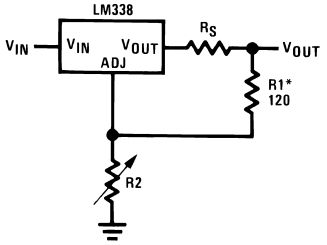

FIGURE 2. Regulator with Line Resistance in Output Lead

With the TO-3 package, it is easy to minimize the resistance from the case to the set resistor, by using 2 separate leads to the case. The ground of R2 can be returned near the ground of the load to provide remote ground sensing and improve load regulation.

Protection Diodes

When external capacitors are used with *any* IC regulator it is sometimes necessary to add protection diodes to prevent the capacitors from discharging through low current points into the regulator. Most 20 µF capacitors have low enough internal series resistance to deliver 20A spikes when shorted. Although the surge is short, there is enough energy to damage parts of the IC.

When an output capacitor is connected to a regulator and the input is shorted, the output capacitor will discharge into the output of the regulator. The discharge current depends on the value of the capacitor, the output voltage of the regulator, and the rate of decrease of V_{IN}. In the LM138 this discharge path is through a large junction that is able to sustain 25A surge with no problem. This is not true of other types of positive regulators. For output capacitors of 100 µF or less at output of 15V or less, there is no need to use diodes.

The bypass capacitor on the adjustment terminal can discharge through a low current junction. Discharge occurs when *either* the input or output is shorted. Internal to the LM138 is a 50Ω resistor which limits the peak discharge current. No protection is needed for output voltages of 25V or less and 10 µF capacitance. *Figure 3* shows an LM138 with protection diodes included for use with outputs greater than 25V and high values of output capacitance.

Application Hints (Continued)

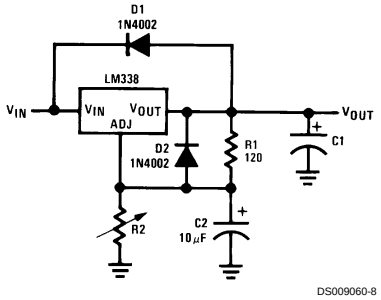

D1 protects against C1
D2 protects against C2

$$V_{OUT} = 1.25V \left(1 + \frac{R2}{R1}\right) + I_{ADJ}R2$$

FIGURE 3. Regulator with Protection Diodes

Typical Applications

Regulator and Voltage Reference

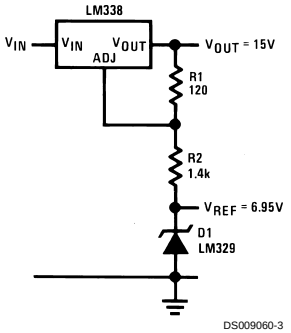

DS009060-3

1.2V–25V Adjustable Regulator

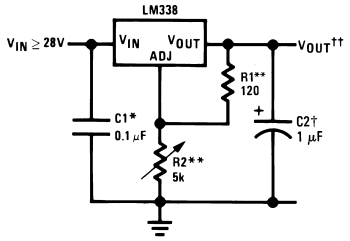

DS009060-1

Temperature Controller

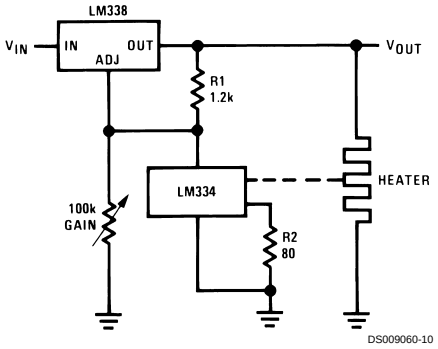

DS009060-10

Full output current not available

at high input-output voltages

†Optional — improves transient response. Output capacitors in the range of 1 μF to 1000 μF of aluminum or tantalum electrolytic are commonly used to provide improved output impedance and rejection of transients.

*Needed if device is more than 6 inches from filter capacitors.

$$\dagger\dagger V_{OUT} = 1.25V \left(1 + \frac{R2}{R1}\right) + I_{ADJ}\,(R_2)$$

**R1 = 240Ω for LM138. R1, R2 as an assembly can be ordered from Bourns:

MIL part no. 7105A-AT2-502

COMM part no. 7105A-AT7-502

Schematic Diagram

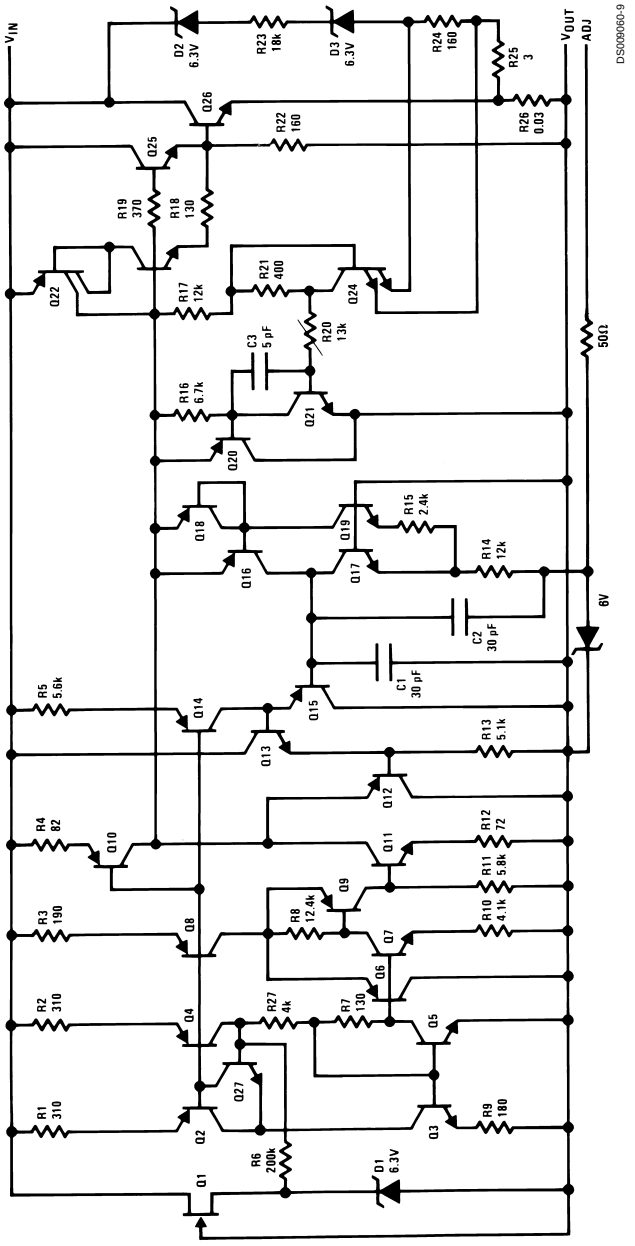

Typical Applications

Precision Power Regulator with Low Temperature Coefficient

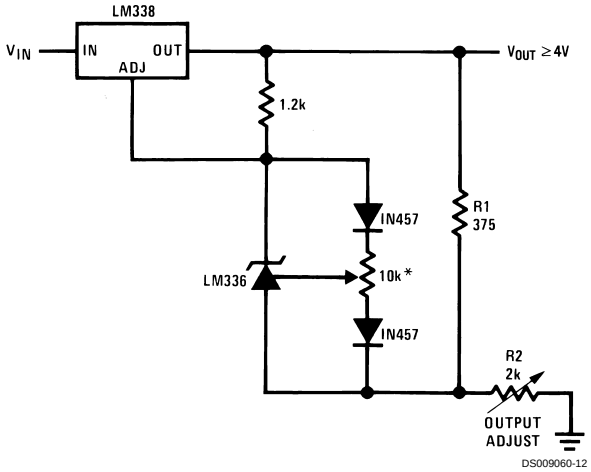

DS009060-12

* Adjust for 3.75 across R1

Slow Turn-On 15V Regulator

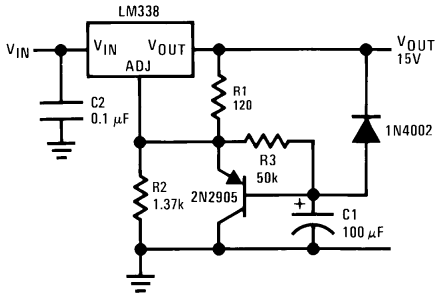

DS009060-13

Adjustable Regulator with Improved Ripple Rejection

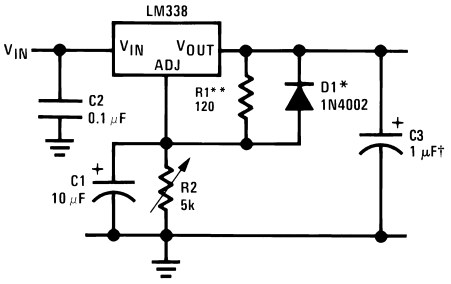

DS009060-14

†Solid tantalum
*Discharges C1 if output is shorted to ground
**R1 = 240Ω for LM138

High Stability 10V Regulator

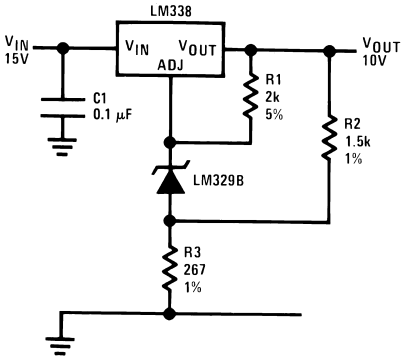

DS009060-15

Digitally Selected Outputs

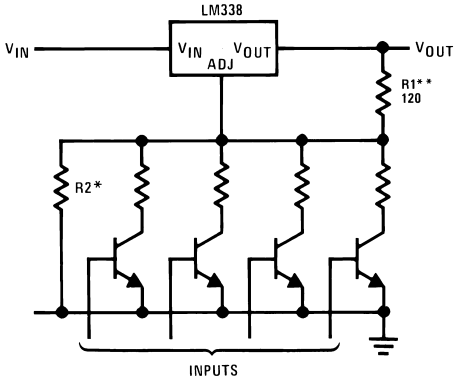

DS009060-16

*Sets maximum V_{OUT}
**R1 = 240Ω for LM138

Typical Applications (Continued)

15A Regulator

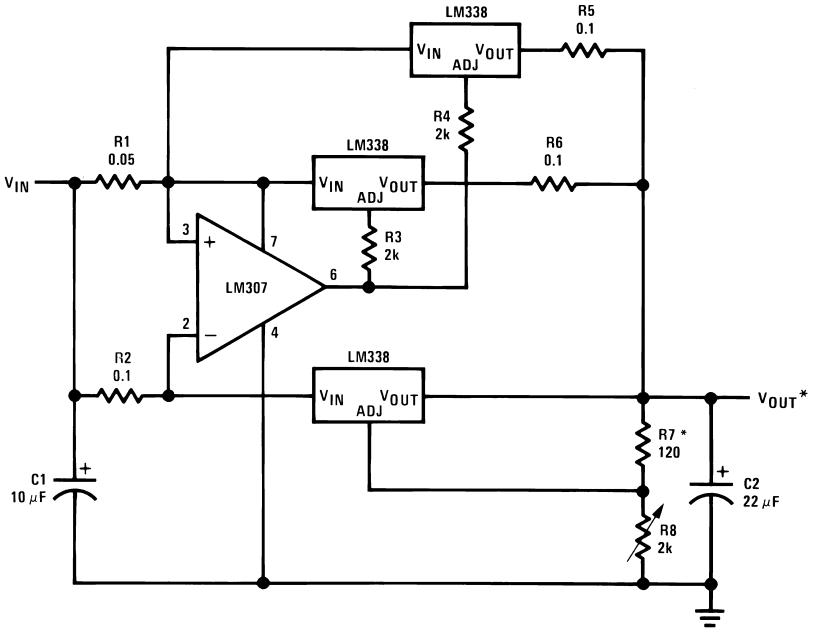

* Minimum load — 100 mA

5V Logic Regulator with Electronic Shutdown**

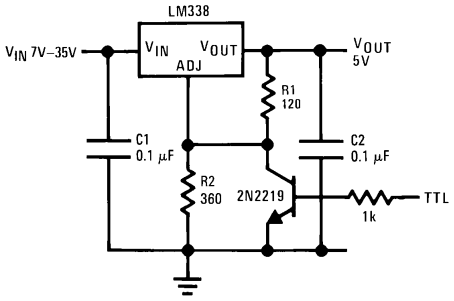

Light Controller

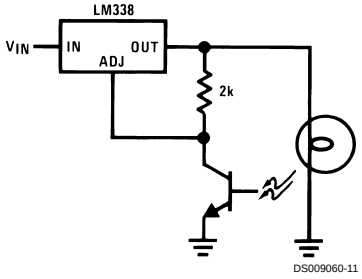

** Minimum output ≈ 1.2V

Typical Applications (Continued)

0 to 22V Regulator

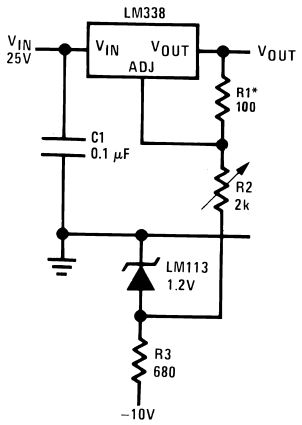

DS009060-19

* R1 = 240Ω, R2 = 5k for LM138
Full output current not available
at high input-output voltages

12V Battery Charger

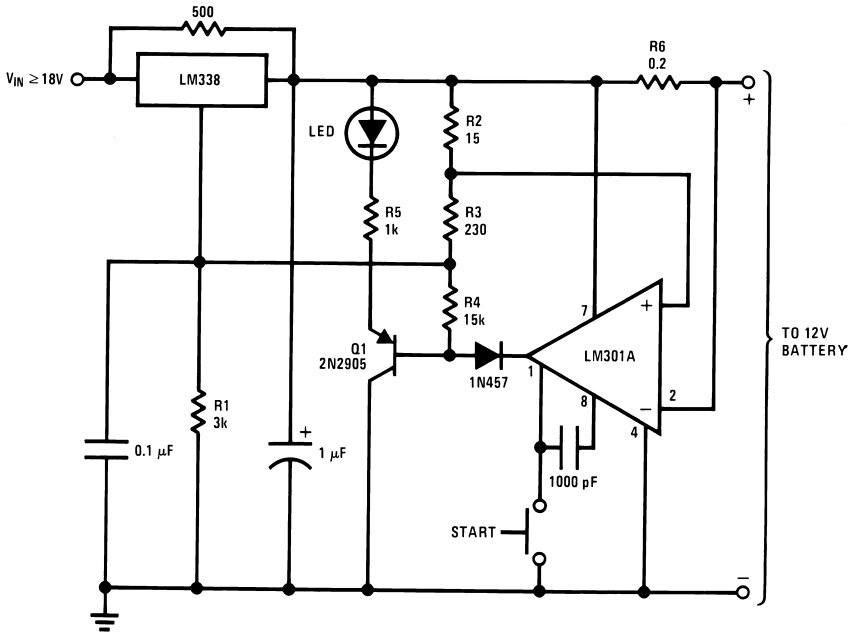

DS009060-20

Typical Applications (Continued)

Adjustable Current Regulator

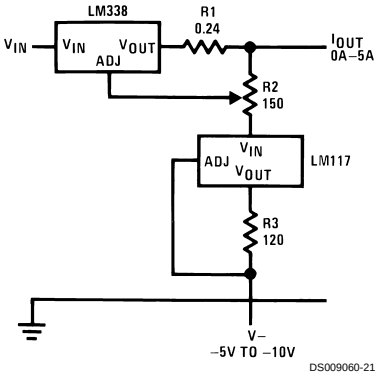

DS009060-21

Precision Current Limiter

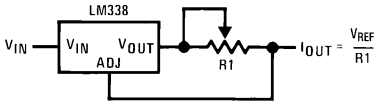

DS009060-22

5A Current Regulator

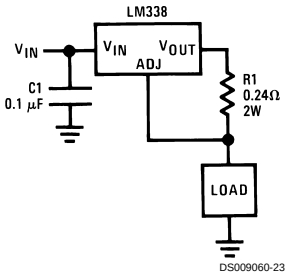

DS009060-23

Tracking Preregulator

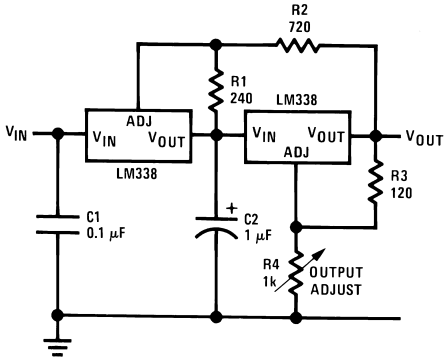

DS009060-24

Adjusting Multiple On-Card Regulators with Single Control*

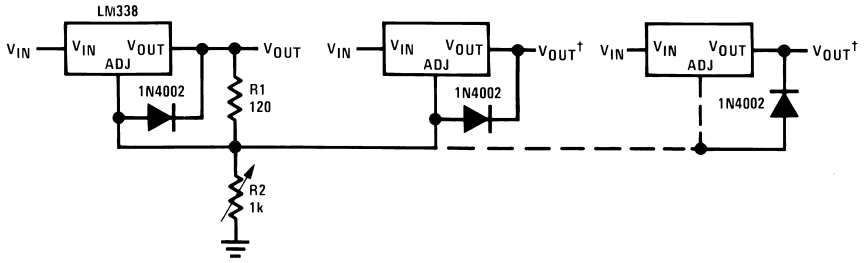

DS009060-25

† Minimum load — 10 mA

* All outputs within ±100 mV

Typical Applications (Continued)

Power Amplifier

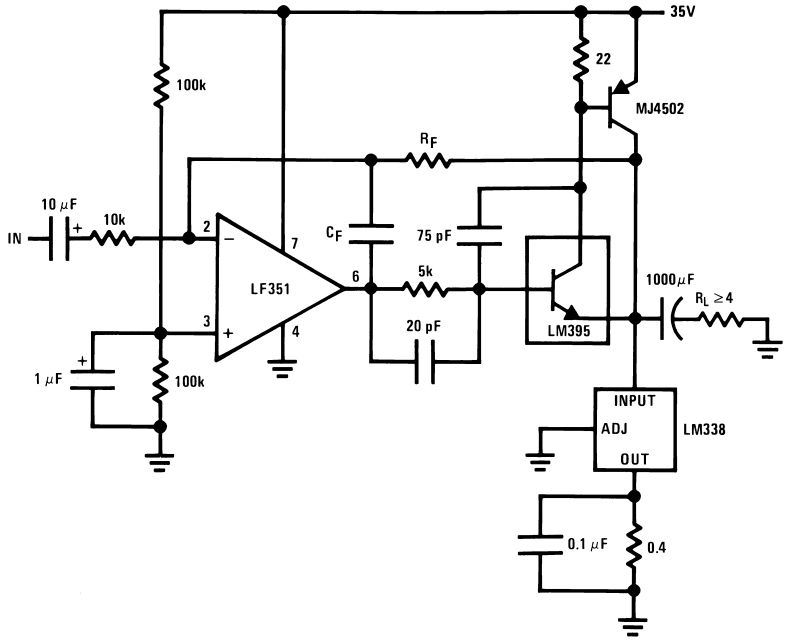

DS009060-27

A_V = 1, R_F = 10k, C_F = 100 pF
A_V = 10, R_F = 100k, C_F = 10 pF
Bandwidth ≥ 100 kHz
Distortion ≤ 0.1%

Simple 12V Battery Charger

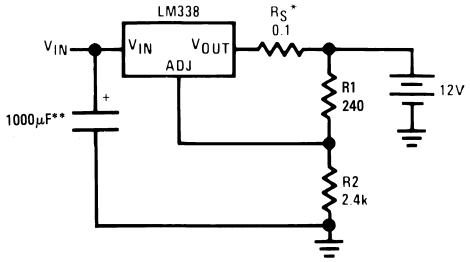

DS009060-28

*R_S—sets output impedance of charger $Z_{OUT} = R_S \left(1 + \frac{R2}{R1}\right)$

Use of R_S allows low charging rates with fully charged battery.
**The 1000 μF is recommended to filter out input transients

Typical Applications (Continued)

Adjustable 15A Regulator

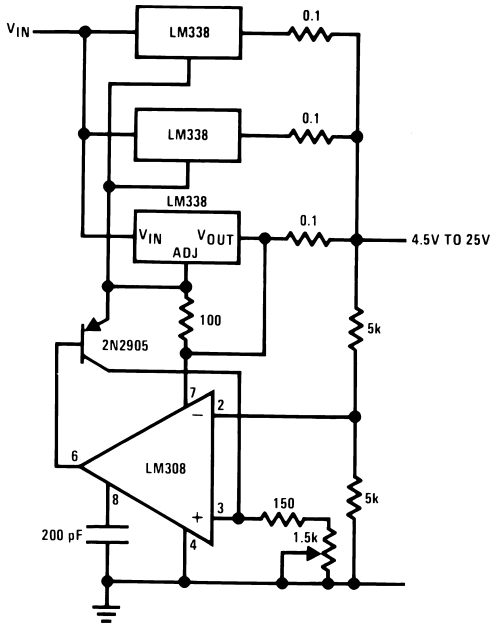

DS009060-26

Current Limited 6V Charger

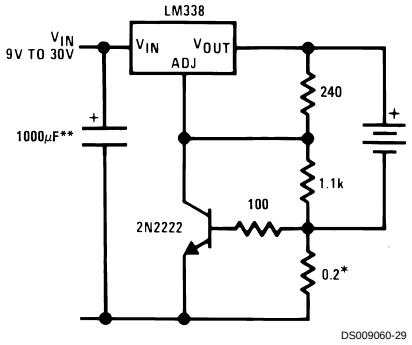

DS009060-29

* Set max charge current to 3A

** THE 1000 µF is recommended to filter out input transients.

10A Regulator

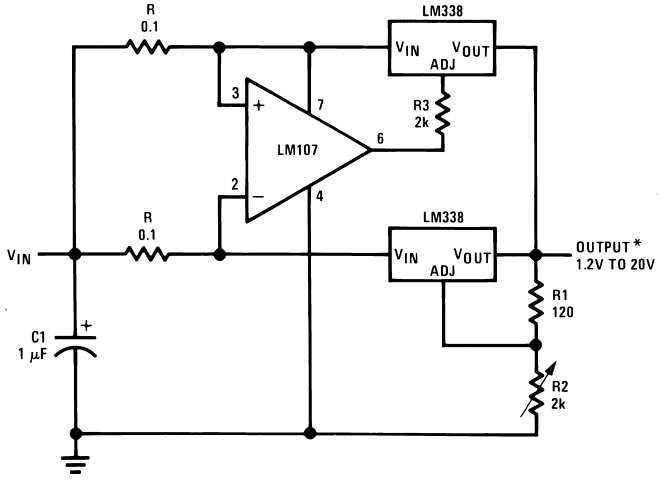

DS009060-2

* Minimum load — 100 mA

Physical Dimensions inches (millimeters) unless otherwise noted

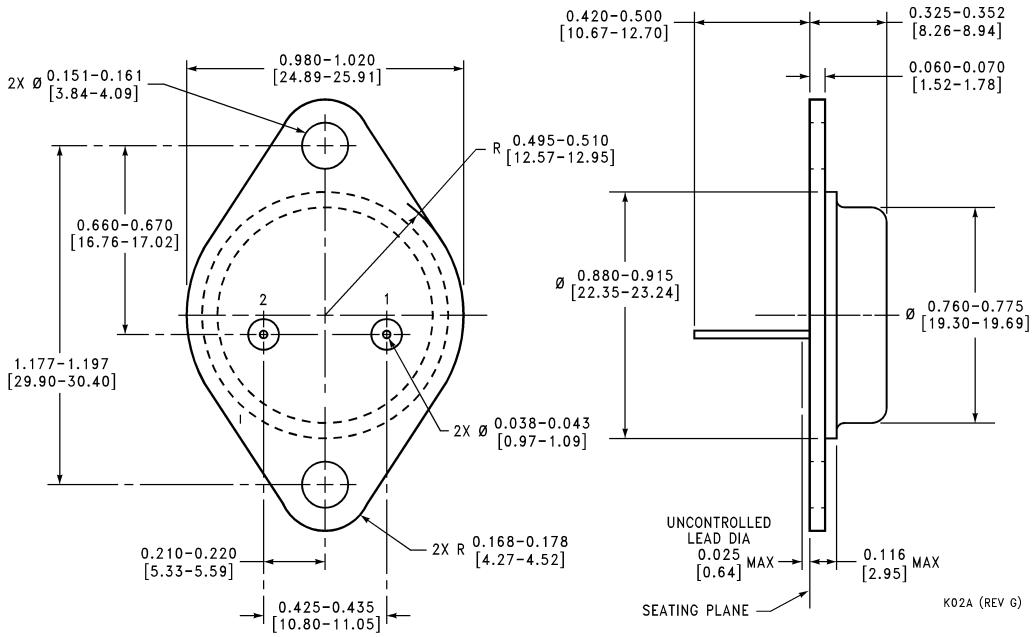

2 Lead TO-3 Metal Can Package (K)
Order Number LM138K or LM338K STEEL
NS Package Number K02A

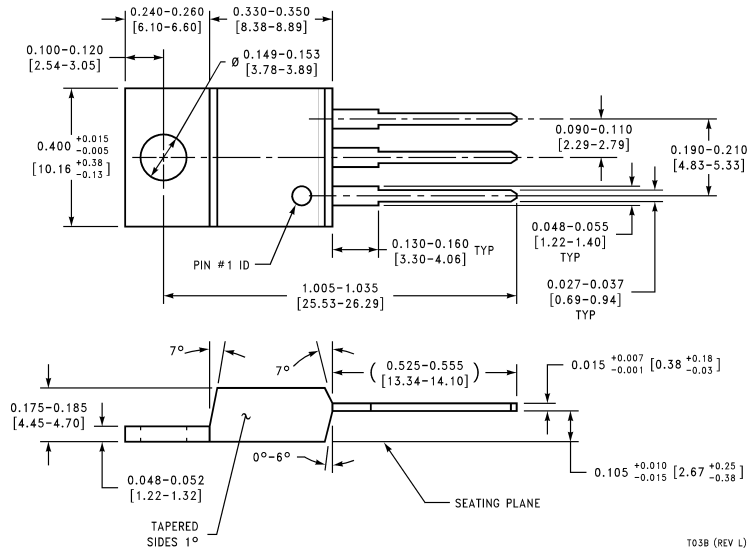

3 Lead Molded TO-220 (T)
Order Number LM338T
NS Package Number T03B

LIFE SUPPORT POLICY

NATIONAL'S PRODUCTS ARE NOT AUTHORIZED FOR USE AS CRITICAL COMPONENTS IN LIFE SUPPORT DEVICES OR SYSTEMS WITHOUT THE EXPRESS WRITTEN APPROVAL OF THE PRESIDENT OF NATIONAL SEMICONDUCTOR CORPORATION. As used herein:

1. Life support devices or systems are devices or systems which, (a) are intended for surgical implant into the body, or (b) support or sustain life, and whose failure to perform when properly used in accordance with instructions for use provided in the labeling, can be reasonably expected to result in a significant injury to the user.
2. A critical component is any component of a life support device or system whose failure to perform can be reasonably expected to cause the failure of the life support device or system, or to affect its safety or effectiveness.

National Semiconductor Corporation
Americas
Tel: 1-800-272-9959
Fax: 1-800-737-7018
Email: support@nsc.com

www.national.com

National Semiconductor Europe
Fax: +49 (0) 1 80-530 85 86
Email: europe.support@nsc.com
Deutsch Tel: +49 (0) 1 80-530 85 85
English Tel: +49 (0) 1 80-532 78 32
Français Tel: +49 (0) 1 80-532 93 58
Italiano Tel: +49 (0) 1 80-534 16 80

National Semiconductor Asia Pacific Customer Response Group
Tel: 65-2544466
Fax: 65-2504466
Email: sea.support@nsc.com

National Semiconductor Japan Ltd.
Tel: 81-3-5639-7560
Fax: 81-3-5639-7507

National does not assume any responsibility for use of any circuitry described, no circuit patent licenses are implied and National reserves the right at any time without notice to change said circuitry and specifications.

ENTEGRECİ

Bu belge www.entegreci.com üzerinden sunulmaktadır.

Elektronik komponent tedarikinde Entegreci

Entegreci, Eskişehir merkezli, Türkiye geneline satış yapan bir elektronik komponent mağazasıdır. Entegreler (IC), mikrodenetleyiciler, transistörler, diyotlar, pasif elemanlar, konnektörler, modüller ve geliştirme kartları tek adetten seri üretim adetlerine kadar satılır. Ürün sayfalarında güncel stok durumunu, fiyatı ve datasheet bağlantısını bulabilirsiniz.

Parça koduyla arama

Üretici parça numarasını yazın; stok ve fiyatı hemen görün.

www.entegreci.com

Ürün kategorileri

Entegreden kapasitöre tüm elektronik komponent kategorileri.

Kategorilere göz atın

Üreticiler

Aradığınız üreticinin ürünlerini tek sayfada inceleyin.

Üreticileri görün

Toplu alım ve teklif

Listede olmayan ya da yüksek adetli parçalar için teklif isteyin.

Teklif isteyin

www.entegreci.com | **destek@entegreci.com** | **0850 305 90 34**

Entegreci is an online electronic components store based in Türkiye. Search by manufacturer part number to see stock, prices and datasheets for integrated circuits, microcontrollers, transistors, passive components and connectors, or request a quote for parts that are not listed.

Bu sayfa Entegreci tarafından eklenmiştir. Belgenin önceki sayfaları asıl yayıncısına aittir ve içeriği değiştirilmemiştir; en güncel sürüm için belgenin yayıncısına başvurun.