L78L

Positive voltage regulators

Datasheet - production data

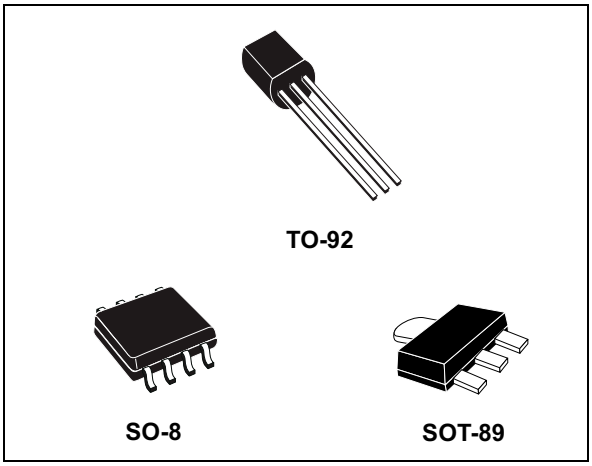

Features

- Output current up to 100 mA
- Output voltages of 3.3; 5; 6; 8; 9; 10; 12; 15; 18; 24 V thermal overload protection
- Short-circuit protection
- No external components are required
- Available in either ± 4% (A) or ± 8% (C) selection

Description

The L78L series of three-terminal positive regulators employ internal current limiting and thermal shutdown, making them essentially indestructible. If adequate heat-sink is provided, they can deliver up to 100 mA output current. They are intended as fixed voltage regulators in a wide range of applications including local or on-card regulation for elimination of noise and distribution problems associated with single-point regulation. In addition, they can be used with power pass elements to make high-current voltage regulators. The L78L series used as Zener diode/resistor combination replacement, offers e improvement along with lower quiescent current and lower noise.

This is information on a product in full production. www.st.com

Contents

1 Diagram 3

2 Pin configuration 4

3 Maximum ratings 5

4 Electrical characteristics 6

5 Typical performance 25

6 Typical application 27

7 Package information 29

7.1 TO-92 package information 29

7.2 TO-92 packing information 30

7.3 TO-92 Ammopack packing information 32

7.4 SO-8 package information 34

7.5 SO-8 packing information 37

7.6 SOT-89 package information 38

7.7 SOT-89 packing information 41

8 Ordering information 42

9 Revision history 45

1 Diagram

Figure 1. Schematic diagram

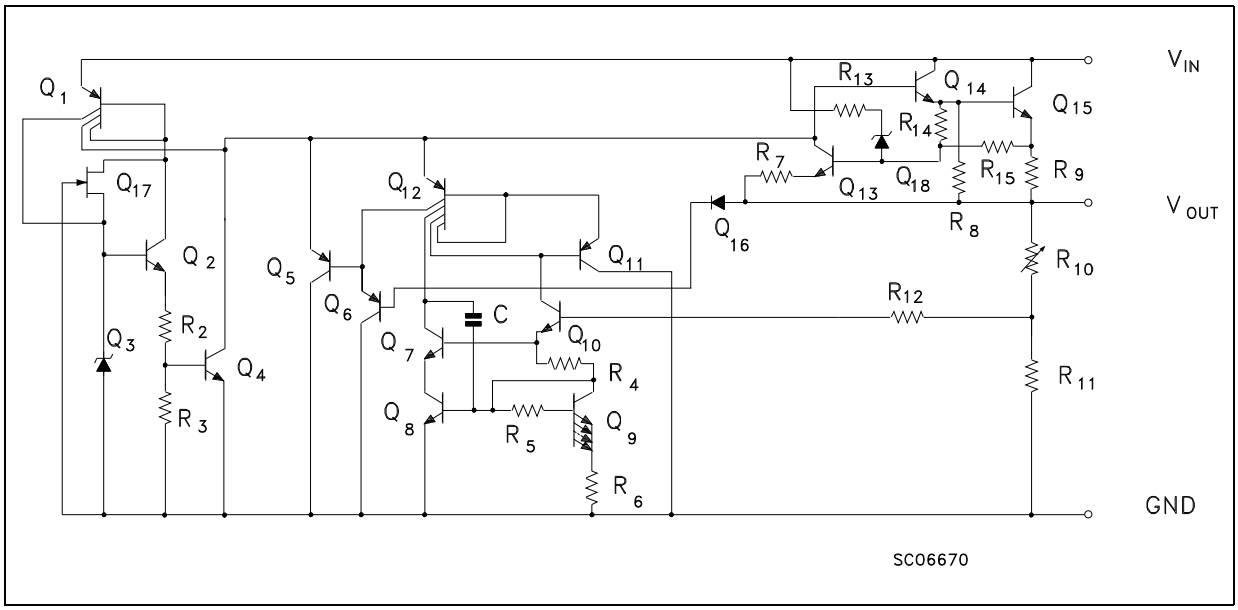

2 Pin configuration

Figure 2. Pin connection (top view, bottom view for TO-92)

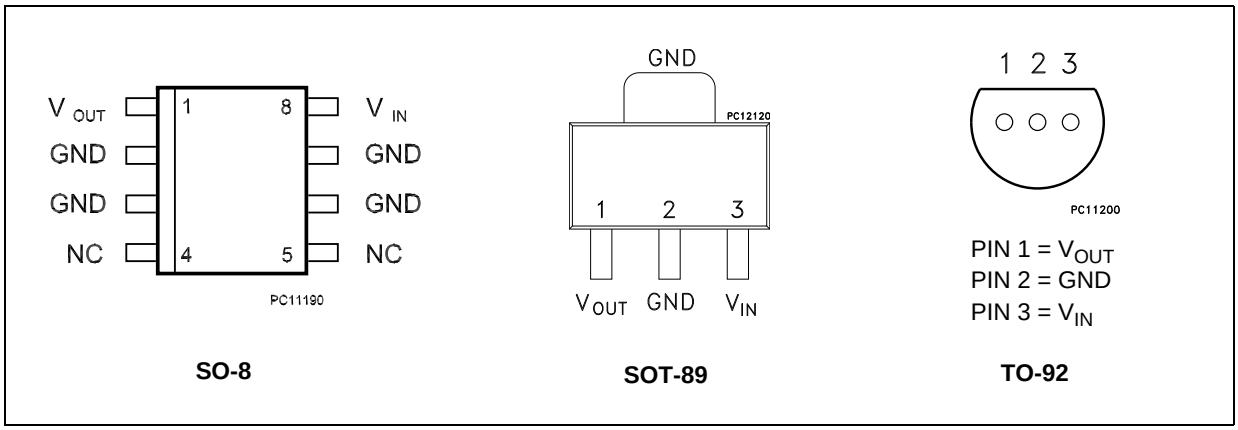

Figure 3. Test circuits

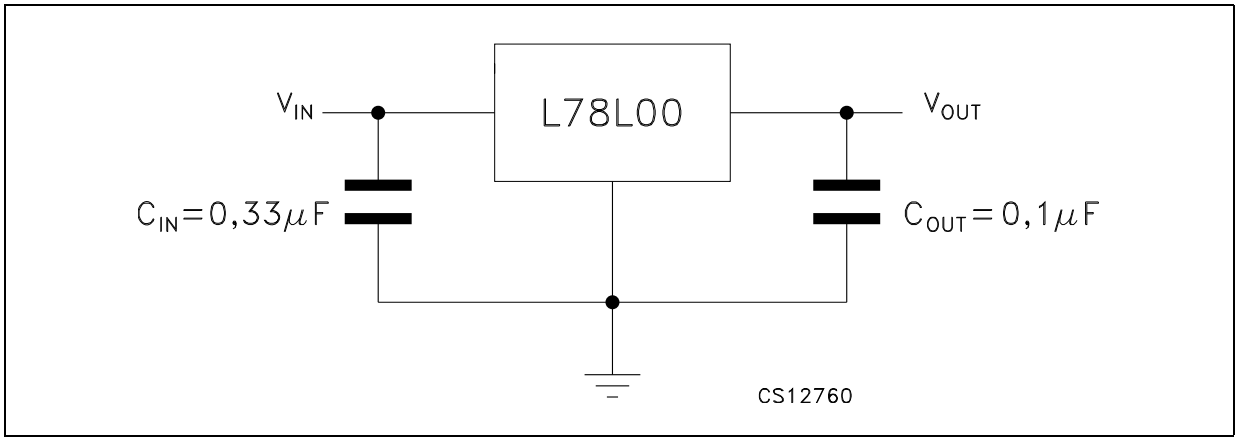

3 Maximum ratings

Table 1. Absolute maximum ratings

Symbol	Parameter		Value	Unit
V_I	DC Input voltage	V_O = 3.3 to 9 V	30	V
		V_O = 12 to 15 V	35	
		V_O = 18 to 24 V	40	
I_O	Output current		100	mA
P_D	Power dissipation		Internally limited (1)	mW
T_{STG}	Storage temperature range		-65 to 150	°C
T_{OP}	Operating junction temperature range	for L78LxxAC / L78LxxC	0 to 125	°C
		for L78LxxAB	-40 to 125	

1. Our SO-8 package used for voltage regulators is modified internally to have pins 2, 3, 6 and 7 electrically communed to the die attach flag. This particular frame decreases the total thermal resistance of the package and increases its ability to dissipate power when an appropriate area of copper on the printed circuit board is available for heat-sinking. The external dimensions are the same as for the standard SO-8.

Table 2. Thermal data

Symbol	Parameter	SO-8	TO-92	SOT-89	Unit
R_{thJC}	Thermal resistance junction-case (max)	20		15	°C/W
R_{thJA}	Thermal resistance junction-ambient (max)	55 (1)	200	55 (1)	°C/W

1. Considering 6 cm² of copper Board heat-sink.

4 Electrical characteristics

Refer to the test circuits, T_J = 0 to 125 °C, V_I = 8.3 V, I_O = 40 mA, C_I = 0.33 µF, C_O = 0.1 µF unless otherwise specified.

Table 3. Electrical characteristics of L78L33C

Symbol	Parameter	Test conditions	Min.	Typ.	Max.	Unit
V_O	Output voltage	T_J = 25 °C	3.036	3.3	3.564	V
V_O	Output voltage	I_O = 1 to 40 mA, V_I = 5.3 to 20 V	2.97		3.63	V
		I_O = 1 to 70 mA, V_I = 8.3 V	2.97		3.63	
DV_O	Line regulation	V_I = 5.3 to 20 V, T_J = 25 °C			150	mV
		V_I = 6.3 to 20 V, T_J = 25 °C			100	
DV_O	Load regulation	I_O = 1 to 100 mA, T_J = 25 °C			60	mV
		I_O = 1 to 40 mA, T_J = 25 °C			30	
I_d	Quiescent current	T_J = 25 °C			6	mA
		T_J = 125 °C			5.5	mA
DI_d	Quiescent current change	I_O = 1 to 40 mA			0.2	mA
		V_I = 6.3 to 20 V			1.5	
eN	Output noise voltage	B = 10 Hz to 100 kHz, T_J = 25 °C		40		µV
SVR	Supply voltage rejection	V_I = 6.3 to 16.3 V, f = 120 Hz I_O = 40 mA, T_J = 25 °C	41	49		dB
V_d	Dropout voltage			1.7		V

Refer to the test circuits, T_J = 0 to 125 °C, V_I = 10 V, I_O = 40 mA, C_I = 0.33 µF, C_O = 0.1 µF unless otherwise specified.

Table 4. Electrical characteristics of L78L05C

Symbol	Parameter	Test conditions	Min.	Typ.	Max.	Unit
V_O	Output voltage	T_J = 25 °C	4.6	5	5.4	V
V_O	Output voltage	I_O = 1 to 40 mA, V_I = 7 to 20 V	4.5		5.5	V
		I_O = 1 to 70 mA, V_I = 10 V	4.5		5.5	
DV_O	Line regulation	V_I = 8.5 to 20 V, T_J = 25 °C			200	mV
		V_I = 9 to 20 V, T_J = 25 °C			150	
DV_O	Load regulation	I_O = 1 to 100 mA, T_J = 25 °C			60	mV
		I_O = 1 to 40 mA, T_J = 25 °C			30	
I_d	Quiescent current	T_J = 25 °C			6	mA
		T_J = 125 °C			5.5	mA
DI_d	Quiescent current change	I_O = 1 to 40 mA			0.2	mA
		V_I = 8 to 20 V			1.5	
eN	Output noise voltage	B = 10 Hz to 100 kHz, T_J = 25 °C		40		µV
SVR	Supply voltage rejection	V_I = 9 to 20 V, f = 120 Hz I_O = 40 mA, T_J = 25 °C	40	49		dB
V_d	Dropout voltage			1.7		V

Refer to the test circuits, T_J = 0 to 125 °C,V_I = 14 V, I_O = 40 mA, C_I = 0.33 µF, C_O = 0.1 µF unless otherwise specified.

Table 5. Electrical characteristics of L78L08C

Symbol	Parameter	Test conditions	Min.	Typ.	Max.	Unit
V_O	Output voltage	T_J = 25 °C	7.36	8	8.64	V
V_O	Output voltage	I_O = 1 to 40 mA, V_I = 8.5 to 20 V	7.2		8.8	V
		I_O = 1 to 70 mA, V_I = 12 V	7.2		8.8	
DV_O	Line regulation	V_I = 8.5 to 20 V, T_J = 25 °C			200	mV
		V_I = 9 to 20 V, T_J = 25 °C			150	
DV_O	Load regulation	I_O = 1 to 100 mA, T_J = 25 °C			80	mV
		I_O = 1 to 40 mA, T_J = 25 °C			40	
I_d	Quiescent current	T_J = 25 °C			6	mA
		T_J = 125 °C			5.5	mA
DI_d	Quiescent current change	I_O = 1 to 40 mA			0.2	mA
		V_I = 8 to 20 V			1.5	
eN	Output noise voltage	B = 10 Hz to 100 kHz, T_J = 25 °C		60		µV
SVR	Supply voltage rejection	V_I = 9 to 20 V, f = 120 Hz I_O = 40 mA, T_J = 25 °C	36	45		dB
V_d	Dropout voltage			1.7		V

Refer to the test circuits, T_J = 0 to 125 °C, V_I = 15 V, I_O = 40 mA, C_I = 0.33 µF, C_O = 0.1 µF unless otherwise specified.

Table 6. Electrical characteristics of L78L09C

Symbol	Parameter	Test conditions	Min.	Typ.	Max.	Unit
V_O	Output voltage	T_J = 25 °C	8.28	9	9.72	V
V_O	Output voltage	I_O = 1 to 40 mA, V_I = 11.5 to 23 V	8.1		9.9	V
		I_O = 1 to 70 mA, V_I = 15 V	8.1		9.9	
DV_O	Line regulation	V_I = 11.5 to 23 V, T_J = 25 °C			250	mV
		V_I = 12 to 23 V, T_J = 25 °C			200	
DV_O	Load regulation	I_O = 1 to 100 mA, T_J = 25 °C			80	mV
		I_O = 1 to 40 mA, T_J = 25 °C			40	
I_d	Quiescent current	T_J = 25 °C			6	mA
		T_J = 125 °C			5.5	mA
DI_d	Quiescent current change	I_O = 1 to 40 mA			0.2	mA
		V_I = 12 to 23 V			1.5	
eN	Output noise voltage	B = 10 Hz to 100 kHz, T_J = 25 °C		70		µV
SVR	Supply voltage rejection	V_I = 12 to 23 V, f = 120 Hz I_O = 40 mA, T_J = 25 °C	36	44		dB
V_d	Dropout voltage			1.7		V

Refer to the test circuits, T_J = 0 to 125 °C, V_I = 16 V, I_O = 40 mA, C_I = 0.33 µF, C_O = 0.1 µF unless otherwise specified.

Table 7. Electrical characteristics of L78L10C

Symbol	Parameter	Test conditions	Min.	Typ.	Max.	Unit
V_O	Output voltage	T_J = 25 °C	9.2	10	10.8	V
V_O	Output voltage	I_O = 1 to 40 mA, V_I = 12.5 to 23 V	9		11	V
		I_O = 1 to 70 mA, V_I = 16 V	9		11	
DV_O	Line regulation	V_I = 12.5 to 23 V, T_J = 25 °C			230	mV
		V_I = 13 to 23 V, T_J = 25 °C			170	
DV_O	Load regulation	I_O = 1 to 100 mA, T_J = 25 °C			80	mV
		I_O = 1 to 40 mA, T_J = 25 °C			40	
I_d	Quiescent current	T_J = 25 °C			6	mA
		T_J = 125 °C			5.5	mA
DI_d	Quiescent current change	I_O = 1 to 40 mA			0.1	mA
		V_I = 13 to 23 V			1.5	
eN	Output noise voltage	B = 10 Hz to 100 kHz, T_J = 25 °C		60		µV
SVR	Supply voltage rejection	V_I = 14 to 23 V, f = 120 Hz I_O = 40 mA, T_J = 25 °C	37	45		dB
V_d	Dropout voltage			1.7		V

Refer to the test circuits, T_J = 0 to 125 °C, V_I = 19 V, I_O = 40 mA, C_I = 0.33 µF, C_O = 0.1 µF unless otherwise specified.

Table 8. Electrical characteristics of L78L12C

Symbol	Parameter	Test conditions	Min.	Typ.	Max.	Unit
V_O	Output voltage	T_J = 25 °C	11.1	12	12.9	V
V_O	Output voltage	I_O = 1 to 40 mA, V_I = 14.5 to 27 V	10.8		13.2	V
		I_O = 1 to 70 mA, V_I = 19 V	10.8		13.2	
DV_O	Line regulation	V_I = 14.5 to 27 V, T_J = 25 °C			250	mV
		V_I = 16 to 27 V, T_J = 25 °C			200	
DV_O	Load regulation	I_O = 1 to 100 mA, T_J = 25 °C			100	mV
		I_O = 1 to 40 mA, T_J = 25 °C			50	
I_d	Quiescent current	T_J = 25 °C			6.5	mA
		T_J = 125 °C			6	mA
DI_d	Quiescent current change	I_O = 1 to 40 mA			0.2	mA
		V_I = 16 to 27 V			1.5	
eN	Output noise voltage	B = 10 Hz to 100 kHz, T_J = 25 °C		80		µV
SVR	Supply voltage rejection	V_I = 15 to 25 V, f = 120 Hz I_O = 40 mA, T_J = 25 °C	36	42		dB
V_d	Dropout voltage			1.7		V

Refer to the test circuits, T_J = 0 to 125 °C, V_I = 23 V, I_O = 40 mA, C_I = 0.33 µF, C_O = 0.1 µF unless otherwise specified

Table 9. Electrical characteristics of L78L15C

Symbol	Parameter	Test conditions	Min.	Typ.	Max.	Unit
V_O	Output voltage	T_J = 25 °C	13.8	15	16.2	V
V_O	Output voltage	I_O = 1 to 40 mA, V_I = 17.5 to 30 V	13.5		16.5	V
		I_O = 1 to 70 mA, V_I = 23 V	13.5		16.5	
DV_O	Line regulation	V_I = 17.5 to 30 V, T_J = 25 °C			300	mV
		V_I = 20 to 30 V, T_J = 25 °C			250	
DV_O	Load regulation	I_O = 1 to 100 mA, T_J = 25 °C			150	mV
		I_O = 1 to 40 mA, T_J = 25 °C			75	
I_d	Quiescent current	T_J = 25 °C			6.5	mA
		T_J = 125 °C			6	mA
DI_d	Quiescent current change	I_O = 1 to 40 mA			0.2	mA
		V_I = 20 to 30 V			1.5	
eN	Output noise voltage	B = 10 Hz to 100 kHz, T_J = 25 °C		90		µV
SVR	Supply voltage rejection	V_I = 18.5 to 28.5 V, f = 120 Hz I_O = 40 mA, T_J = 25 °C	33	39		dB
V_d	Dropout voltage			1.7		V

Refer to the test circuits, T_J = 0 to 125 °C, V_I = 27 V, I_O = 40 mA, C_I = 0.33 µF, C_O = 0.1 µF unless otherwise specified.

Table 10. Electrical characteristics of L78L18C

Symbol	Parameter	Test conditions	Min.	Typ.	Max.	Unit
V_O	Output voltage	T_J = 25 °C	16.6	18	19.4	V
V_O	Output voltage	I_O = 1 to 40 mA, V_I = 22 to 33 V	16.2		19.8	V
		I_O = 1 to 70 mA, V_I = 27 V	16.2		19.8	
DV_O	Line regulation	V_I = 22 to 33 V, T_J = 25 °C			320	mV
		V_I = 22 to 33 V, T_J = 25 °C			270	
DV_O	Load regulation	I_O = 1 to 100 mA, T_J = 25 °C			170	mV
		I_O = 1 to 40 mA, T_J = 25 °C			85	
I_d	Quiescent current	T_J = 25 °C			6.5	mA
		T_J = 125 °C			6	mA
DI_d	Quiescent current change	I_O = 1 to 40 mA			0.2	mA
		V_I = 23 to 33 V			1.5	
eN	Output noise voltage	B = 10 Hz to 100 kHz, T_J = 25 °C		120		µV
SVR	Supply voltage rejection	V_I = 23 to 33 V, f = 120 Hz I_O = 40 mA, T_J = 25 °C	32	38		dB
V_d	Dropout voltage			1.7		V

Refer to the test circuits, T_J = 0 to 125 °C, V_I = 33 V, I_O = 40 mA, C_I = 0.33 µF, C_O = 0.1 µF unless otherwise specified.

Table 11. Electrical characteristics of L78L24C

Symbol	Parameter	Test conditions	Min.	Typ.	Max.	Unit
V_O	Output voltage	T_J = 25 °C	22.1	24	25.9	V
V_O	Output voltage	I_O = 1 to 40 mA, V_I = 27 to 38 V	21.6		26.4	V
		I_O = 1 to 70 mA, V_I = 33 V	21.6		26.4	
DV_O	Line regulation	V_I = 27 to 38 V, T_J = 25 °C			350	mV
		V_I = 28 to 38 V, T_J = 25 °C			300	
DV_O	Load regulation	I_O = 1 to 100 mA, T_J = 25 °C			200	mV
		I_O = 1 to 40 mA, T_J = 25 °C			100	
I_d	Quiescent current	T_J = 25 °C			6.5	mA
		T_J = 125 °C			6	mA
DI_d	Quiescent current change	I_O = 1 to 40 mA			0.2	mA
		V_I = 28 to 38 V			1.5	
eN	Output noise voltage	B = 10 Hz to 100 kHz, T_J = 25 °C		200		µV
SVR	Supply voltage rejection	V_I = 29 to 35 V, f = 120 Hz I_O = 40 mA, T_J = 25 °C	30	37		dB
V_d	Dropout voltage			1.7		V

Refer to the test circuits, T_J = 0 to 125 °C (AC) T_J = -40 to 125 °C (AB),V_I = 8.3 V, I_O = 40mA, C_I = 0.33 µF, C_O = 0.1 µF unless otherwise specified.

Table 12. Electrical characteristics of L78L33AB and L78L33AC

Symbol	Parameter	Test conditions	Min.	Typ.	Max.	Unit
V_O	Output voltage	T_J = 25 °C	3.168	3.3	3.432	V
V_O	Output voltage	I_O = 1 to 40 mA, V_I = 5.3 to 20 V	3.135		3.465	V
		I_O = 1 to 70 mA, V_I = 8.3 V	3.135		3.465	
DV_O	Line regulation	V_I = 5.3 to 20 V, T_J = 25 °C			150	mV
		V_I = 6.3 to 20 V, T_J = 25 °C			100	
DV_O	Load regulation	I_O = 1 to 100 mA, T_J = 25 °C			60	mV
		I_O = 1 to 40 mA, T_J = 25 °C			30	
I_d	Quiescent current	T_J = 25 °C			6	mA
		T_J = 125 °C			5.5	mA
DI_d	Quiescent current change	I_O = 1 to 40 mA			0.1	mA
		V_I = 6.3 to 20 V			1.5	
eN	Output noise voltage	B = 10 Hz to 100 kHz, T_J = 25 °C		40		µV
SVR	Supply voltage rejection	V_I = 6.3 to 16.3 V, f = 120 Hz I_O = 40 mA, T_J = 25 °C	41	49		dB
V_d	Dropout voltage			1.7		V

Refer to the test circuits, T_J = 0 to 125 °C (AC) T_J = -40 to 125 °C (AB), V_I = 10 V, I_O = 40 mA, C_I = 0.33 µF, C_O = 0.1 µF unless otherwise specified.

Table 13. Electrical characteristics of L78L05AB and L78L05AC

Symbol	Parameter	Test conditions	Min.	Typ.	Max.	Unit
V_O	Output voltage	T_J = 25 °C	4.8	5	5.2	V
V_O	Output voltage	I_O = 1 to 40 mA, V_I = 7 to 20 V	4.75		5.25	V
		I_O = 1 to 70 mA, V_I = 10 V	4.75		5.25	
DV_O	Line regulation	V_I = 7 to 20 V, T_J = 25 °C			150	mV
		V_I = 8 to 20 V, T_J = 25 °C			100	
DV_O	Load regulation	I_O = 1 to 100 mA, T_J = 25 °C			60	mV
		I_O = 1 to 40 mA, T_J = 25 °C			30	
I_d	Quiescent current	T_J = 25 °C			6	mA
		T_J = 125 °C			5.5	mA
DI_d	Quiescent current change	I_O = 1 to 40 mA			0.1	mA
		V_I = 8 to 20 V			1.5	
eN	Output noise voltage	B = 10 Hz to 100 kHz, T_J = 25 °C		40		µV
SVR	Supply voltage rejection	V_I = 8 to 18 V, f = 120 Hz I_O = 40 mA, T_J = 25 °C	41	49		dB
V_d	Dropout voltage			1.7		V

Refer to the test circuits, T_J = 0 to 125 °C (AC) T_J = -40 to 125 °C (AB), V_I = 12 V, I_O = 40 mA, C_I = 0.33 µF, C_O = 0.1 µF unless otherwise specified.

Table 14. Electrical characteristics of L78L06AB and L78L06AC

Symbol	Parameter	Test conditions	Min.	Typ.	Max.	Unit
V_O	Output voltage	T_J = 25 °C	5.76	6	6.24	V
V_O	Output voltage	I_O = 1 to 40 mA, V_I = 8.5 to 20 V	5.7		6.3	V
		I_O = 1 to 70 mA, V_I = 12 V	5.7		6.3	
ΔV_O	Line regulation	V_I = 8.5 to 20 V, T_J = 25 °C			150	mV
		V_I = 9 to 20 V, T_J = 25 °C			100	
ΔV_O	Load regulation	I_O = 1 to 100 mA, T_J = 25 °C			60	mV
		I_O = 1 to 40 mA, T_J = 25 °C			30	
I_d	Quiescent current	T_J = 25 °C			6	mA
		T_J = 125 °C			5.5	mA
ΔI_d	Quiescent current change	I_O = 1 to 40 mA			0.1	mA
		V_I = 9 to 20 V			1.5	
eN	Output noise voltage	B = 10 Hz to 100 kHz, T_J = 25 °C		50		µV
SVR	Supply voltage rejection	V_I = 9 to 20 V, f = 120 Hz I_O = 40 mA, T_J = 25 °C	39	46		dB
V_d	Dropout voltage			1.7		V

Refer to the test circuits, T_J = 0 to 125 °C (AC) T_J = -40 to 125 °C (AB), V_I = 14 V, I_O = 40 mA, C_I = 0.33 µF, C_O = 0.1 µF unless otherwise specified.

Table 15. Electrical characteristics of L78L08AB and L78L08AC

Symbol	Parameter	Test conditions	Min.	Typ.	Max.	Unit
V_O	Output voltage	T_J = 25 °C	7.68	8	8.32	V
V_O	Output voltage	I_O = 1 to 40 mA, V_I = 10.5 to 23 V	7.6		8.4	V
		I_O = 1 to 70 mA, V_I = 14 V	7.6		8.4	
DV_O	Line regulation	V_I = 10.5 to 23 V, T_J = 25 °C			175	mV
		V_I = 11 to 23 V, T_J = 25 °C			125	
DV_O	Load regulation	I_O = 1 to 100 mA, T_J = 25 °C			80	mV
		I_O = 1 to 40 mA, T_J = 25 °C			40	
I_d	Quiescent current	T_J = 25 °C			6	mA
		T_J = 125 °C			5.5	mA
DI_d	Quiescent current change	I_O = 1 to 40 mA			0.1	mA
		V_I = 11 to 23 V			1.5	
eN	Output noise voltage	B = 10 Hz to 100 kHz, T_J = 25 °C		60		µV
SVR	Supply voltage rejection	V_I = 12 to 23 V, f = 120 Hz I_O = 40 mA, T_J = 25 °C	37	45		dB
V_d	Dropout voltage			1.7		V

Refer to the test circuits, T_J = 0 to 125 °C (AC) T_J = -40 to 125 °C (AB), V_I =15 V, I_O= 40 mA, C_I = 0.33 µF, C_O = 0.1 µF unless otherwise specified.

Table 16. Electrical characteristics of L78L09AB and L78L09AC

Symbol	Parameter	Test conditions	Min.	Typ.	Max.	Unit
V_O	Output voltage	T_J = 25 °C	8.64	9	9.36	V
V_O	Output voltage	I_O = 1 to 40 mA, V_I = 11.5 to 23 V	8.55		9.45	V
		I_O = 1 to 70 mA, V_I = 15 V	8.55		9.45	
DV_O	Line regulation	V_I = 11.5 to 23 V, T_J = 25 °C			225	mV
		V_I = 12 to 23 V, T_J = 25 °C			150	
DV_O	Load regulation	I_O = 1 to 100 mA, T_J = 25 °C			80	mV
		I_O = 1 to 40 mA, T_J = 25 °C			40	
I_d	Quiescent current	T_J = 25 °C			6	mA
		T_J = 125 °C			5.5	mA
DI_d	Quiescent current change	I_O = 1 to 40 mA			0.1	mA
		V_I = 12 to 23 V			1.5	
eN	Output noise voltage	B = 10 Hz to 100 kHz, T_J = 25 °C		70		µV
SVR	Supply voltage rejection	V_I = 12 to 23 V, f = 120 Hz I_O = 40 mA, T_J = 25 °C	37	44		dB
V_d	Dropout voltage			1.7		V

Refer to the test circuits, T_J = 0 to 125 °C (AC) T_J = -40 to 125 °C (AB), V_I= 16 V, I_O = 40mA, C_I = 0.33 µF, C_O = 0.1 µF unless otherwise specified.

Table 17. Electrical characteristics of L78L10AC

Symbol	Parameter	Test conditions	Min.	Typ.	Max.	Unit
V_O	Output voltage	T_J = 25 °C	9.6	10	10.4	V
V_O	Output voltage	I_O = 1 to 40 mA, V_I = 12.5 to 23 V	9.5		10.5	V
		I_O = 1 to 70 mA, V_I = 16 V	9.5		10.5	
DV_O	Line regulation	V_I = 12.5 to 23 V, T_J = 25 °C			230	mV
		V_I = 13 to 23 V, T_J = 25 °C			170	
DV_O	Load regulation	I_O = 1 to 100 mA, T_J = 25 °C			80	mV
		I_O = 1 to 40 mA, T_J = 25 °C			40	
I_d	Quiescent current	T_J = 25 °C			6	mA
		T_J = 125 °C			5.5	mA
DI_d	Quiescent current change	I_O = 1 to 40 mA			0.1	mA
		V_I = 13 to 23 V			1.5	
eN	Output noise voltage	B = 10 Hz to 100 kHz, T_J = 25 °C		60		µV
SVR	Supply voltage rejection	V_I = 14 to 23 V, f = 120 Hz I_O = 40 mA, T_J = 25 °C	37	45		dB
V_d	Dropout voltage			1.7		V

Refer to the test circuits, T_J = 0 to 125 °C (AC) T_J = -40 to 125 °C (AB), V_I =19 V, I_O = 40 mA, C_I = 0.33 µF, C_O = 0.1 µF unless otherwise specified.

Table 18. Electrical characteristics of L78L12AB and L78L12AC

Symbol	Parameter	Test conditions	Min.	Typ.	Max.	Unit
V_O	Output voltage	T_J = 25 °C	11.5	12	12.5	V
V_O	Output voltage	I_O = 1 to 40 mA, V_I = 14.5 to 27 V	11.4		12.6	V
		I_O = 1 to 70 mA, V_I = 19 V	11.4		12.6	
DV_O	Line regulation	V_I = 14.5 to 27 V, T_J = 25 °C			250	mV
		V_I = 16 to 27 V, T_J = 25 °C			200	
DV_O	Load regulation	I_O = 1 to 100 mA, T_J = 25 °C			100	mV
		I_O = 1 to 40 mA, T_J = 25 °C			50	
I_d	Quiescent current	T_J = 25 °C			6.5	mA
		T_J = 125 °C			6	mA
DI_d	Quiescent current change	I_O = 1 to 40 mA			0.1	mA
		V_I = 16 to 27 V			1.5	
eN	Output noise voltage	B = 10 Hz to 100 kHz, T_J = 25 °C		80		µV
SVR	Supply voltage rejection	V_I = 15 to 25 V, f = 120 Hz I_O = 40 mA, T_J = 25 °C	37	42		dB
V_d	Dropout voltage			1.7		V

Refer to the test circuits, T_J = 0 to 125 °C (AC) T_J = -40 to 125 °C (AB),V_I = 23 V, I_O= 40 mA, C_I = 0.33 µF, C_O = 0.1 µF unless otherwise specified.

Table 19. Electrical characteristics of L78L15AB and L78L15AC

Symbol	Parameter	Test conditions	Min.	Typ.	Max.	Unit
V_O	Output voltage	T_J = 25 °C	14.4	15	15.6	V
V_O	Output voltage	I_O = 1 to 40 mA, V_I = 17.5 to 30 V	14.25		15.75	V
		I_O = 1 to 70 mA, V_I = 23 V	14.25		15.75	
DV_O	Line regulation	V_I = 17.5 to 30 V, T_J = 25 °C			300	mV
		V_I = 20 to 30 V, T_J = 25 °C			250	
DV_O	Load regulation	I_O = 1 to 100 mA, T_J = 25 °C			150	mV
		I_O = 1 to 40 mA, T_J = 25 °C			75	
I_d	Quiescent current	T_J = 25 °C			6.5	mA
		T_J = 125 °C			6	mA
DI_d	Quiescent current change	I_O = 1 to 40 mA			0.1	mA
		V_I = 20 to 30 V			1.5	
eN	Output noise voltage	B = 10 Hz to 100 kHz, T_J = 25 °C		90		µV
SVR	Supply voltage rejection	V_I = 18.5 to 28.5 V, f = 120 Hz I_O = 40 mA, T_J = 25 °C	34	39		dB
V_d	Dropout voltage			1.7		V

Refer to the test circuits, T_J = 0 to 125 °C (AC) T_J = -40 to 125 °C (AB),V_I = 27 V, I_O = 40 mA, C_I = 0.33 µF, C_O = 0.1 µF unless otherwise specified.

Table 20. Electrical characteristics of L78L18AC

Symbol	Parameter	Test conditions	Min.	Typ.	Max.	Unit
V_O	Output voltage	T_J = 25 °C	17.3	18	18.7	V
V_O	Output voltage	I_O = 1 to 40 mA, V_I = 22 to 33 V	17.1		18.9	V
		I_O = 1 to 70 mA, V_I = 27 V	17.1		18.9	
DV_O	Line regulation	V_I = 22 to 33 V, T_J = 25 °C			320	mV
		V_I = 22 to 33 V, T_J = 25 °C			270	
DV_O	Load regulation	I_O = 1 to 100 mA, T_J = 25 °C			170	mV
		I_O = 1 to 40 mA, T_J = 25 °C			85	
I_d	Quiescent current	T_J = 25 °C			6.5	mA
		T_J = 125 °C			6	mA
DI_d	Quiescent current change	I_O = 1 to 40 mA			0.1	mA
		V_I = 23 to 33 V			1.5	
eN	Output noise voltage	B = 10 Hz to 100 kHz, T_J = 25 °C		120		µV
SVR	Supply voltage rejection	V_I = 23 to 33 V, f = 120 Hz I_O = 40 mA, T_J = 25 °C	33	38		dB
V_d	Dropout voltage			1.7		V

Refer to the test circuits, T_J = 0 to 125 °C (AC) T_J = -40 to 125 °C (AB),V_I = 33 V, I_O = 40 mA, C_I = 0.33 µF, C_O = 0.1 µF unless otherwise specified.

Table 21. Electrical characteristics of L78L24AB and L78L24AC

Symbol	Parameter	Test conditions	Min.	Typ.	Max.	Unit
V_O	Output voltage	T_J = 25 °C	23	24	25	V
V_O	Output voltage	I_O = 1 to 40 mA, V_I = 27 to 38 V	22.8		25.2	V
		I_O = 1 to 70 mA, V_I = 33 V	22.8		25.2	
DV_O	Line regulation	V_I = 27 to 38 V, T_J = 25 °C			350	mV
		V_I = 28 to 38 V, T_J = 25 °C			300	
DV_O	Load regulation	I_O = 1 to 100 mA, T_J = 25 °C			200	mV
		I_O = 1 to 40 mA, T_J = 25 °C			100	
I_d	Quiescent current	T_J = 25 °C			6.5	mA
		T_J = 125 °C			6	mA
DI_d	Quiescent current change	I_O = 1 to 40 mA			0.1	mA
		V_I = 28 to 38 V			1.5	
eN	Output noise voltage	B = 10 Hz to 100 kHz, T_J = 25 °C		200		µV5y
SVR	Supply voltage rejection	V_I = 29 to 33 V, f = 120 Hz I_O = 40 mA, T_J = 25 °C	31	37		dB
V_d	Dropout voltage			1.7		V

5 Typical performance

Figure 4. L78L05/12 output voltage vs. ambient temperature

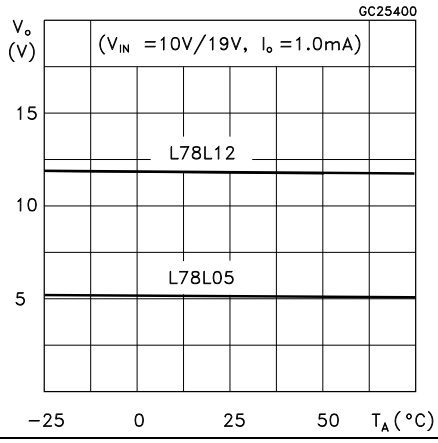

Figure 5. L78L05/12/24 load characteristics

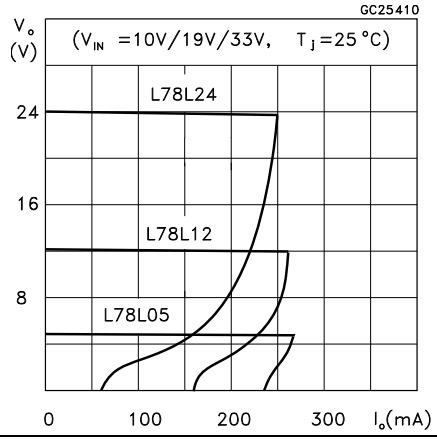

Figure 6. L78L05/12/24 thermal shutdown

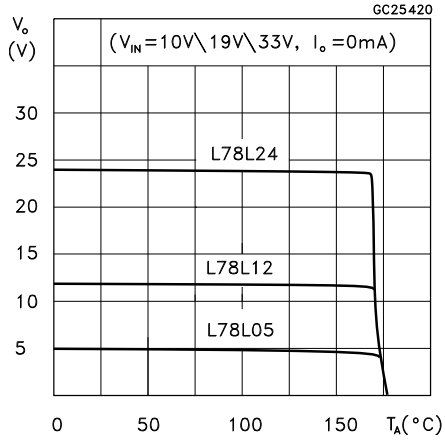

Figure 7. L78L05/12 quiescent current vs. output current

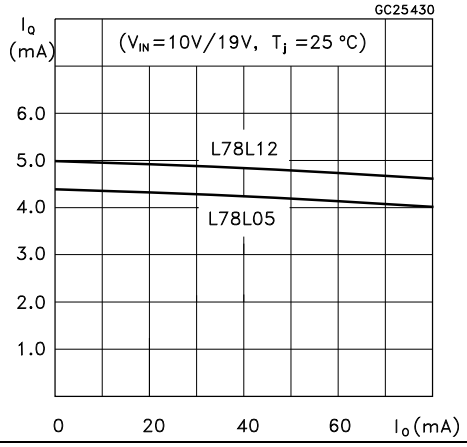

Figure 8. L78L05 quiescent current vs. input voltage

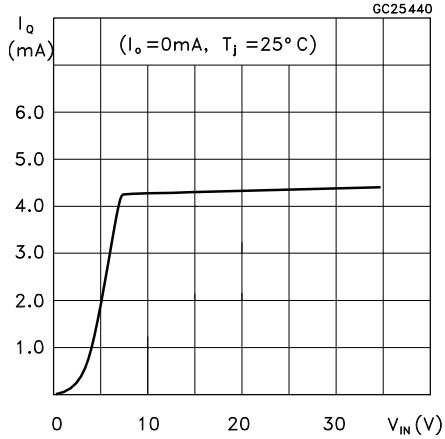

Figure 9. L78L05/12/24 output characteristics

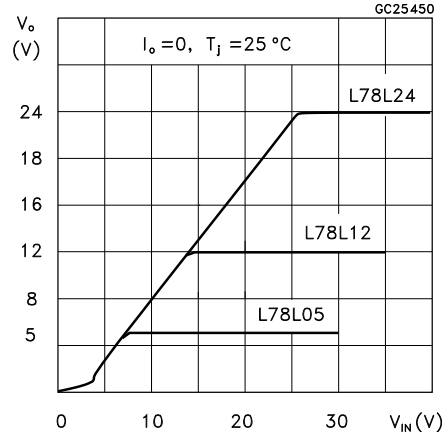

Figure 10. L78L05/12/24 ripple rejection

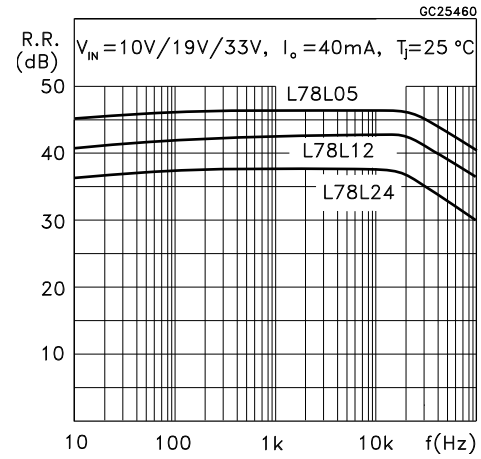

Figure 11. L78L05 dropout characteristics

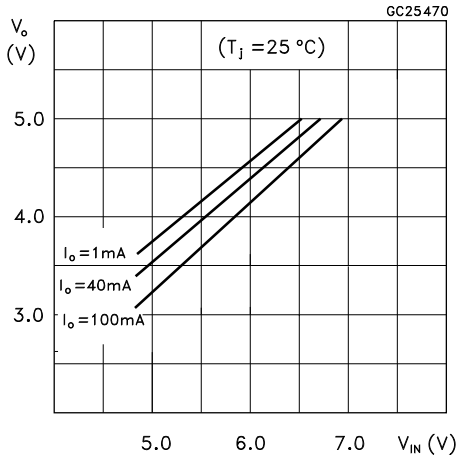

Figure 12. L78L short-circuit output current

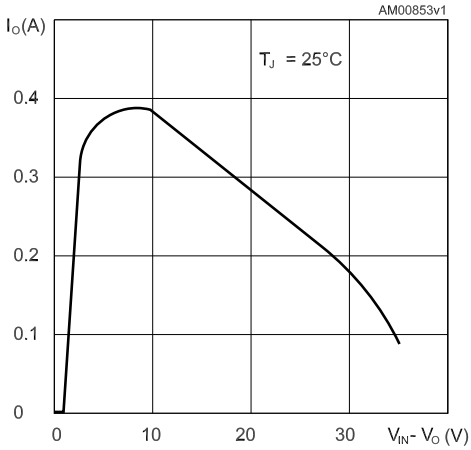

6 Typical application

Figure 13. High output current short-circuit protected

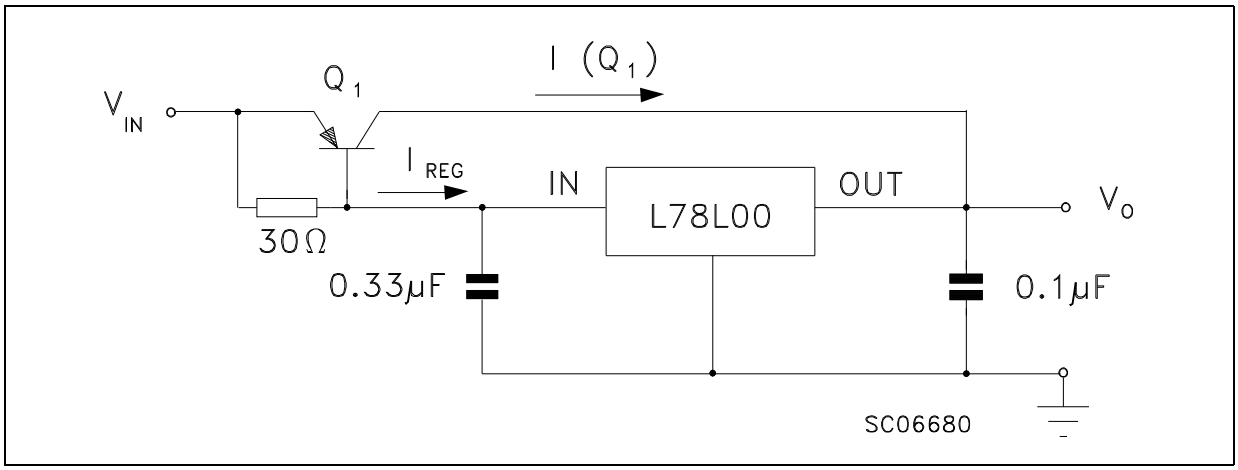

Figure 14. Outuput boost circuit

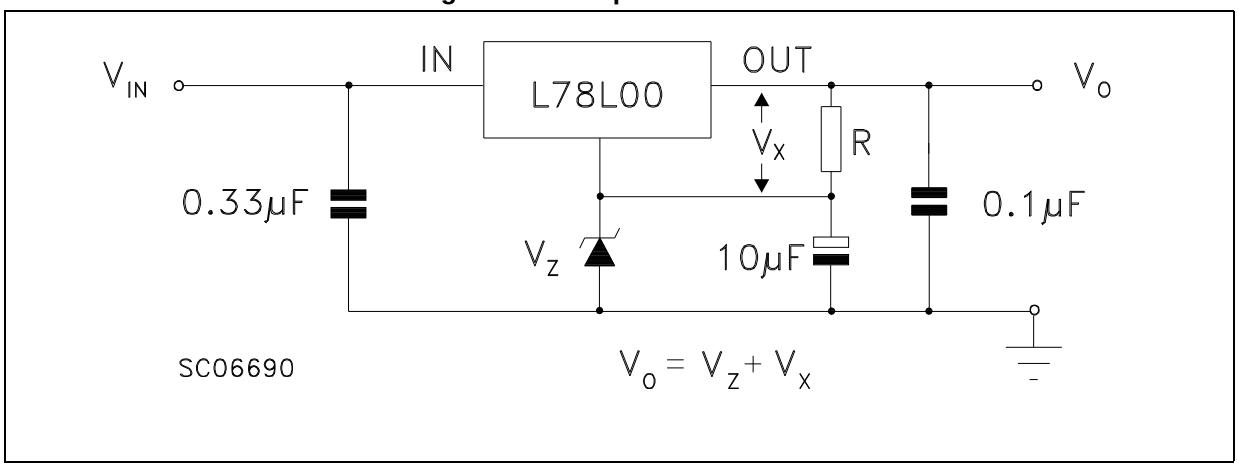

Figure 15. Current regulator

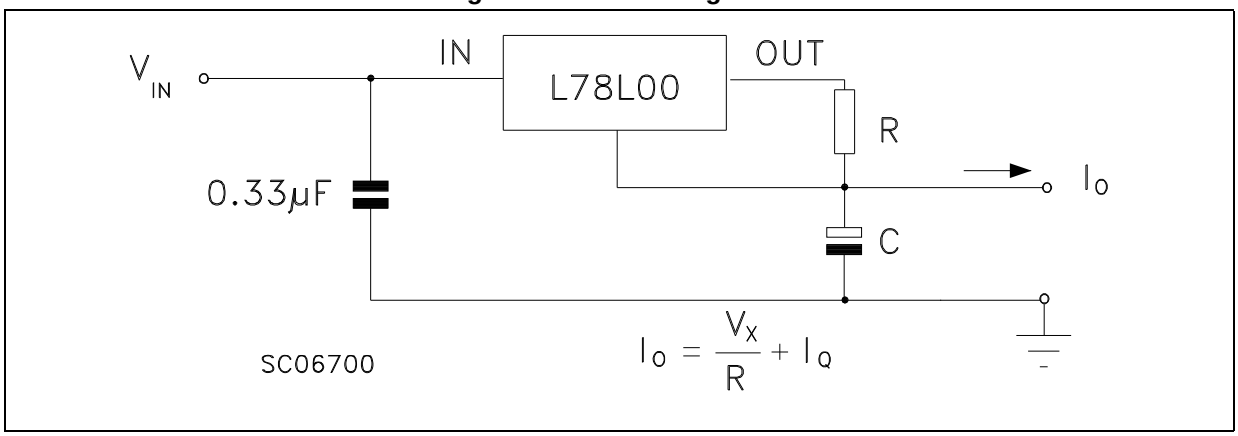

Figure 16. Adjustable output regulator

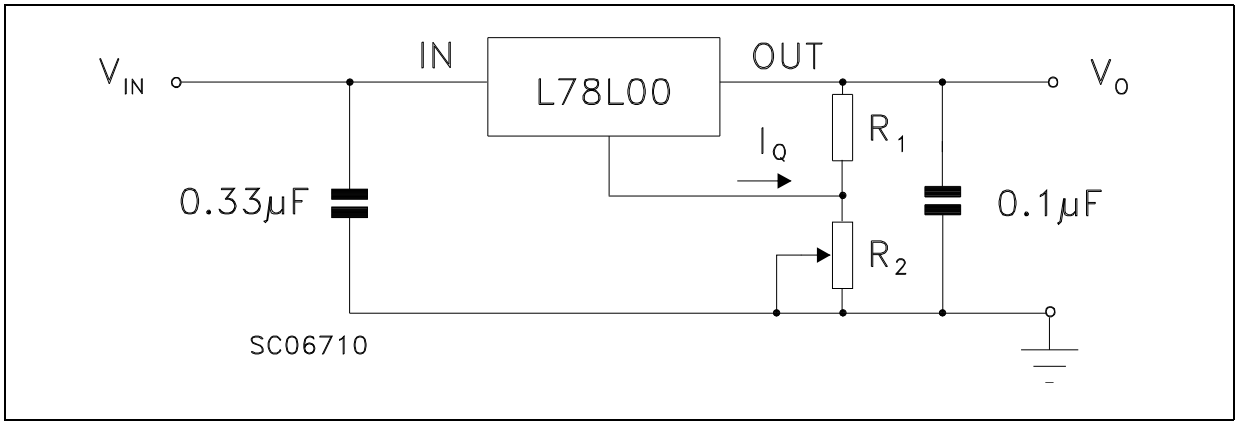

7 Package information

In order to meet environmental requirements, ST offers these devices in different grades of ECOPACK® packages, depending on their level of environmental compliance. ECOPACK® specifications, grade definitions and product status are available at: *www.st.com*. ECOPACK® is an ST trademark.

7.1 TO-92 package information

Figure 17. TO-92 package outline

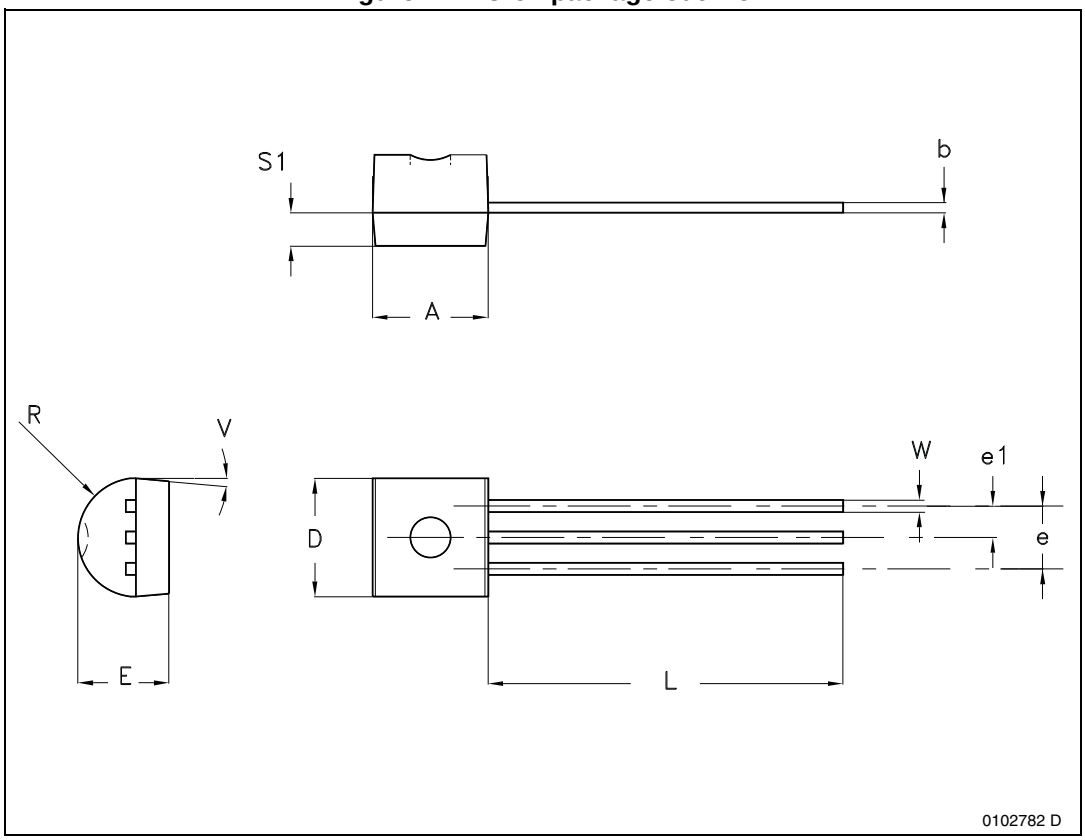

Table 22. TO-92 mechanical data

Dim.	mm		
	Min.	Typ.	Max.
A	4.32		4.95
b	0.36		0.51
D	4.45		4.95
E	3.30		3.94
e	2.41		2.67
e1	1.14		1.40
L	12.70		15.49
R	2.16		2.41
S1	0.92		1.52
W	0.41		0.56
V		5°	

7.2 TO-92 packing information

Figure 18. TO-92 tape and reel outline

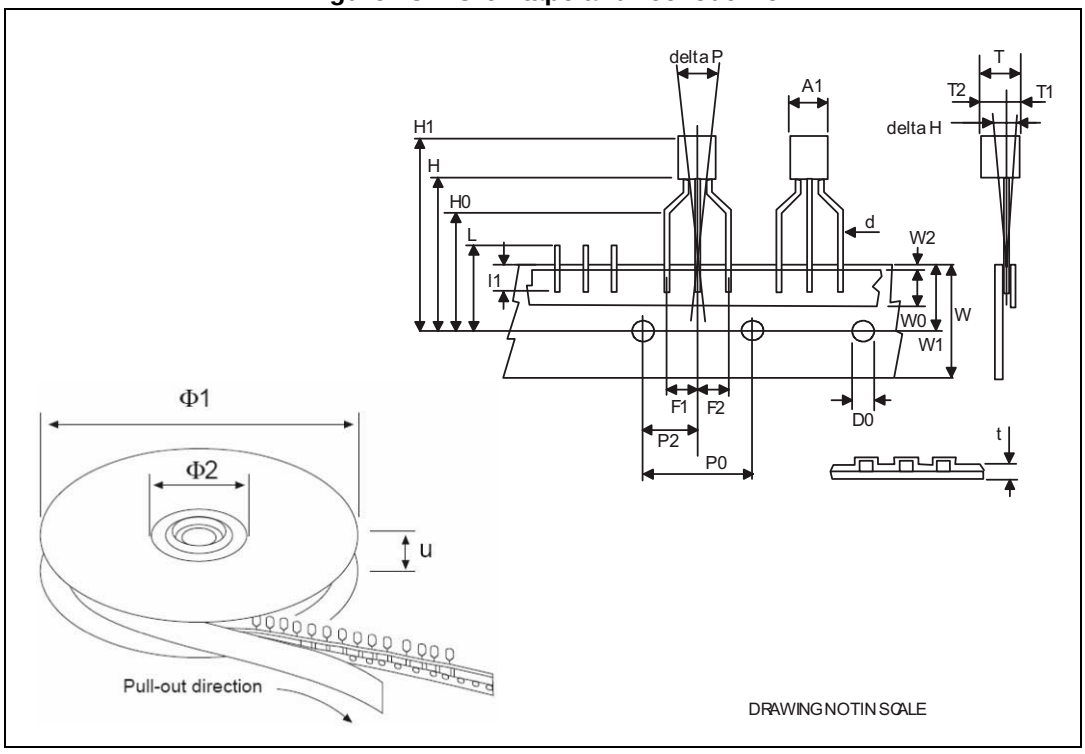

Table 23. TO-92 tape and reel mechanical data

Dim.	mm		
	Min.	Typ.	Max.
A1			4.80
T			3.80
T1			1.60
T2			2.30
d	0.45	0.47	0.48
P0	12.50	12.70	12.90
P2	5.65	6.35	7.05
F1, F2	2.40	2.50	2.94
F3	4.98	5.08	5.48
delta H	-2.00		2.00
W	17.50	18.00	19.00
W0	5.5	6.00	6.5
W1	8.50	9.00	9.25
W2			0.50
H		18.50	21
H3	0.5	1	2
H0	15.50	16.00	18.8
H1		25.0	27.0
D0	3.80	4.00	4.20
t			0.90
L			11.00
l1	3.00		
delta P	-1.00		1.00
Ø1	352	355	358
Ø2	28	30	32
u	44	47	50

7.3 TO-92 Ammopack packing information

Figure 19. TO-92 Ammopack tape and reel outline

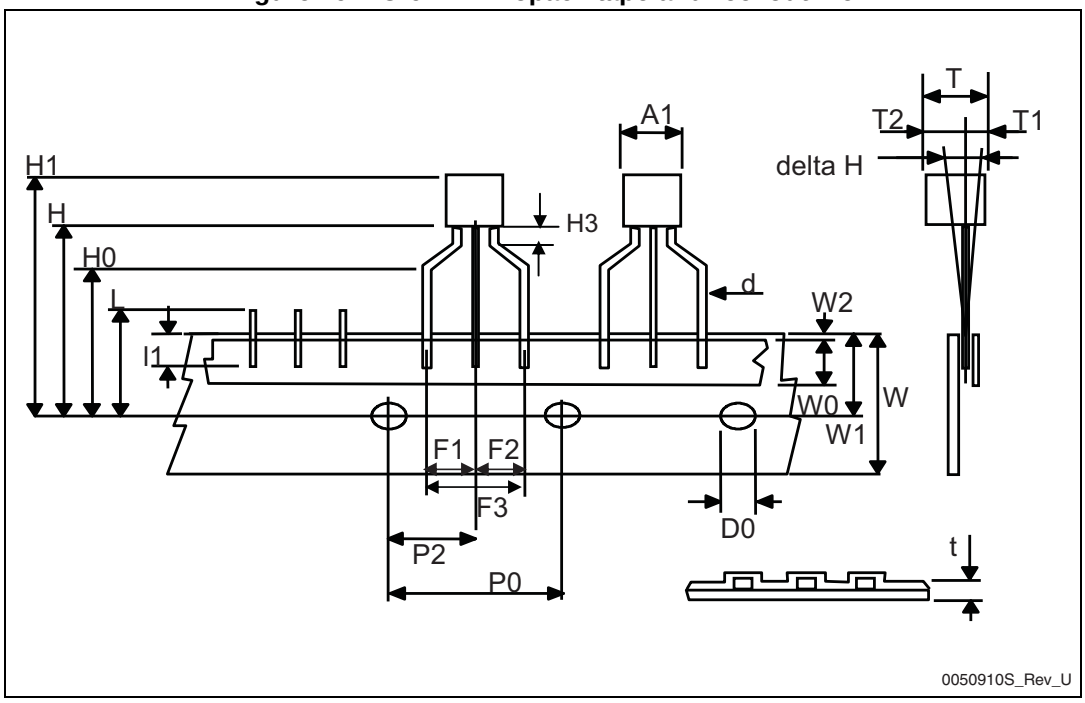

Table 24. TO-92 Ammopack tape and reel mechanical data

Dim.	mm		
	Min.	Typ.	Max.
A1			4.80
T			3.80
T1			1.60
T2			2.30
d	0.45	0.47	0.48
P0	12.50	12.70	12.90
P2	5.65	6.35	7.05
F1, F2	2.40	2.50	2.94
F3	4.98	5.08	5.48
delta H	-2.00		2.00
W	17.50	18.00	19.00
W0	5.5	6.00	6.5
W1	8.50	9.00	9.25
W2			0.50
H		18.50	21
H3	0.5	1	2
H0	15.50	16.00	18.8
H1		25.0	27.0
D0	3.80	4.00	4.20
t			0.90
L			11.00
l1	3.00		
delta P	-1.00		1.00

7.4 SO-8 package information

Figure 20. SO-8 package outline

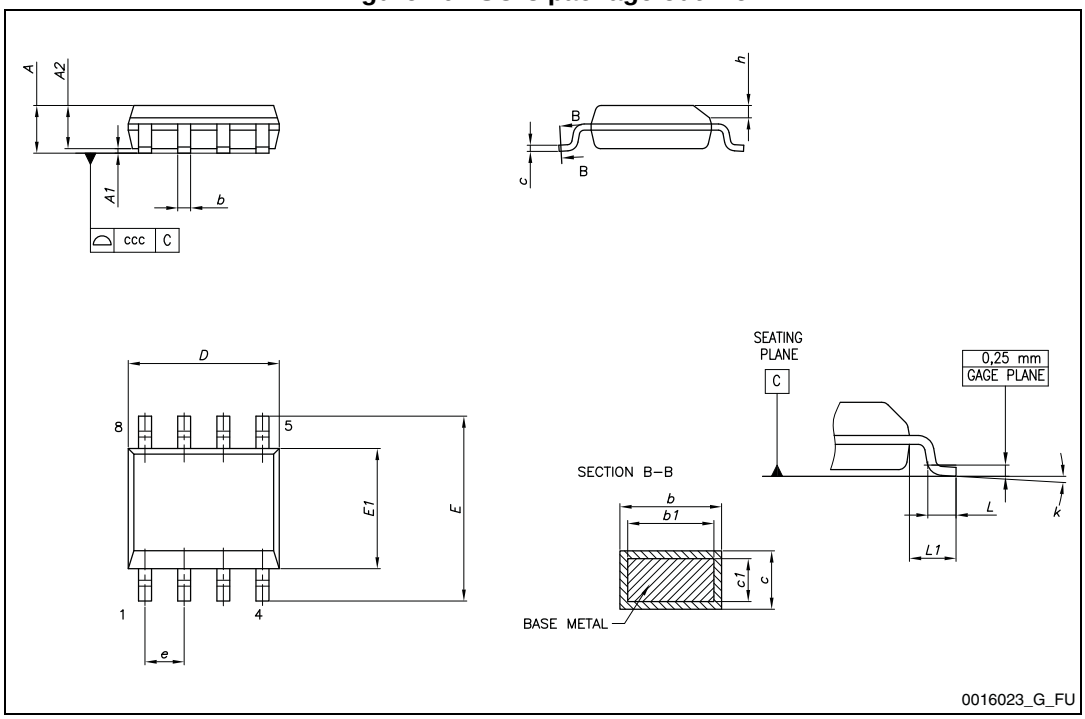

Table 25. SO-8 mechanical data

Dim.	mm		
	Min.	Typ.	Max.
A			1.75
A1	0.10		0.25
A2	1.25		
b	0.31		0.51
b1	0.28		0.48
c	0.10		0.25
c1	0.10		0.23
D	4.80	4.90	5.00
E	5.80	6.00	6.20
E1	3.80	3.90	4.00
e		1.27	
h	0.25		0.50
L	0.40		1.27
L1		1.04	
L2		0.25	
k	0°		8°
ccc			0.10

Figure 21. SO-8 recommended footprint

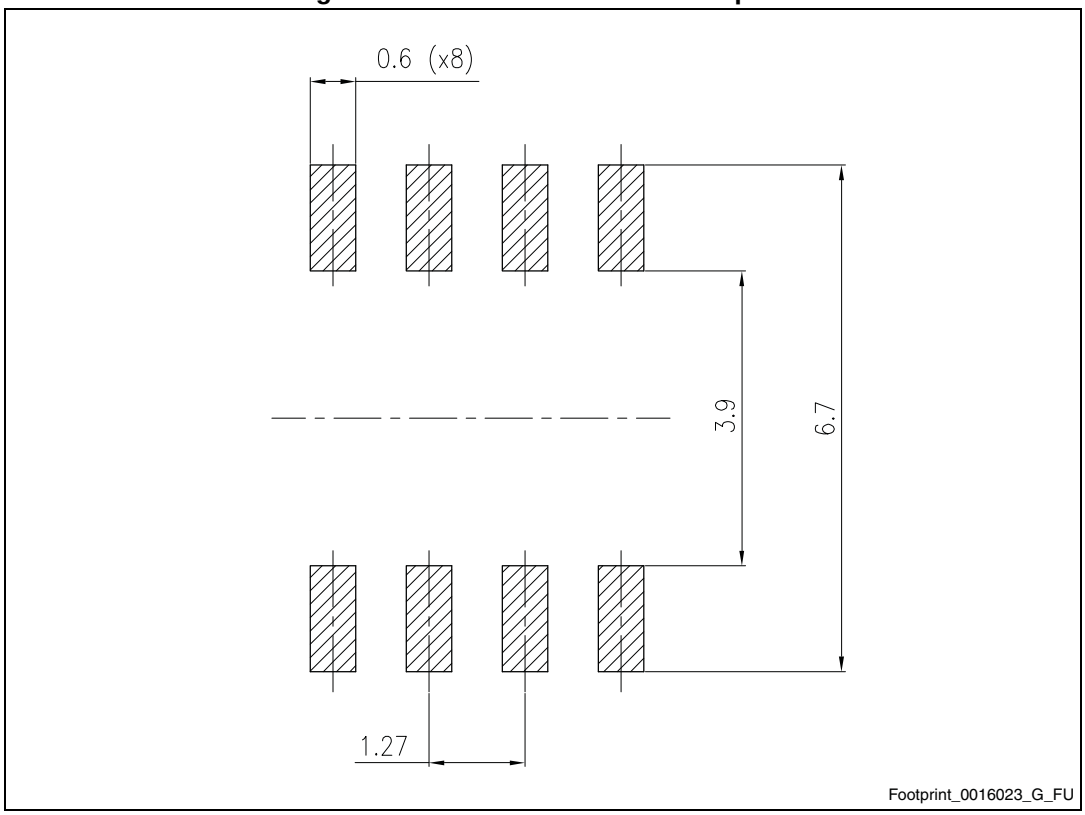

7.5 SO-8 packing information

Figure 22. SO-8 tape and reel outline

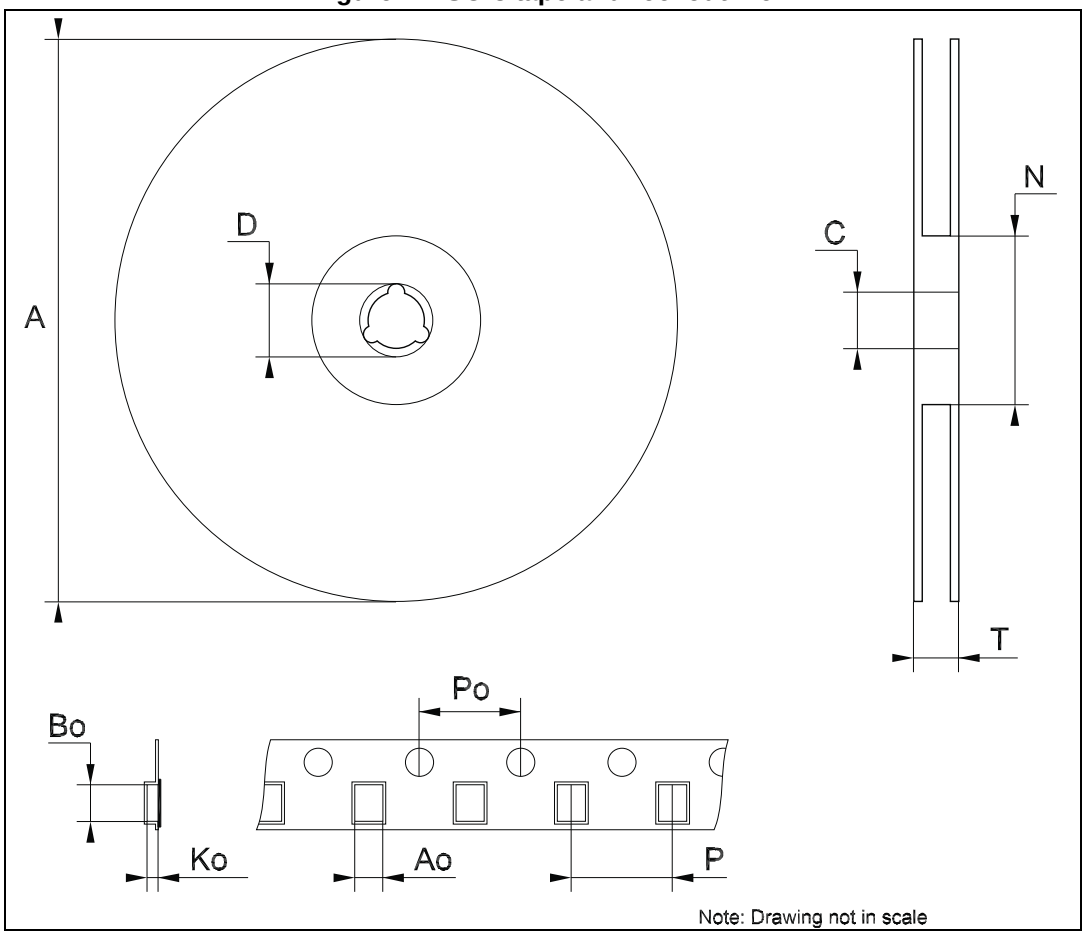

Figure 23. SO-8 tape and reel mechanical data

Dim.	mm		
	Min.	Typ.	Max.
A		-	330
C	12.8		13.2
D	20.2		
N	60		
T			22.4
Ao	8.1		8.5
Bo	5.5		5.9
Ko	2.1		2.3
Po	3.9		4.1
P	7.9		8.1

7.6 SOT-89 package information

Figure 24. SOT-89 package outline

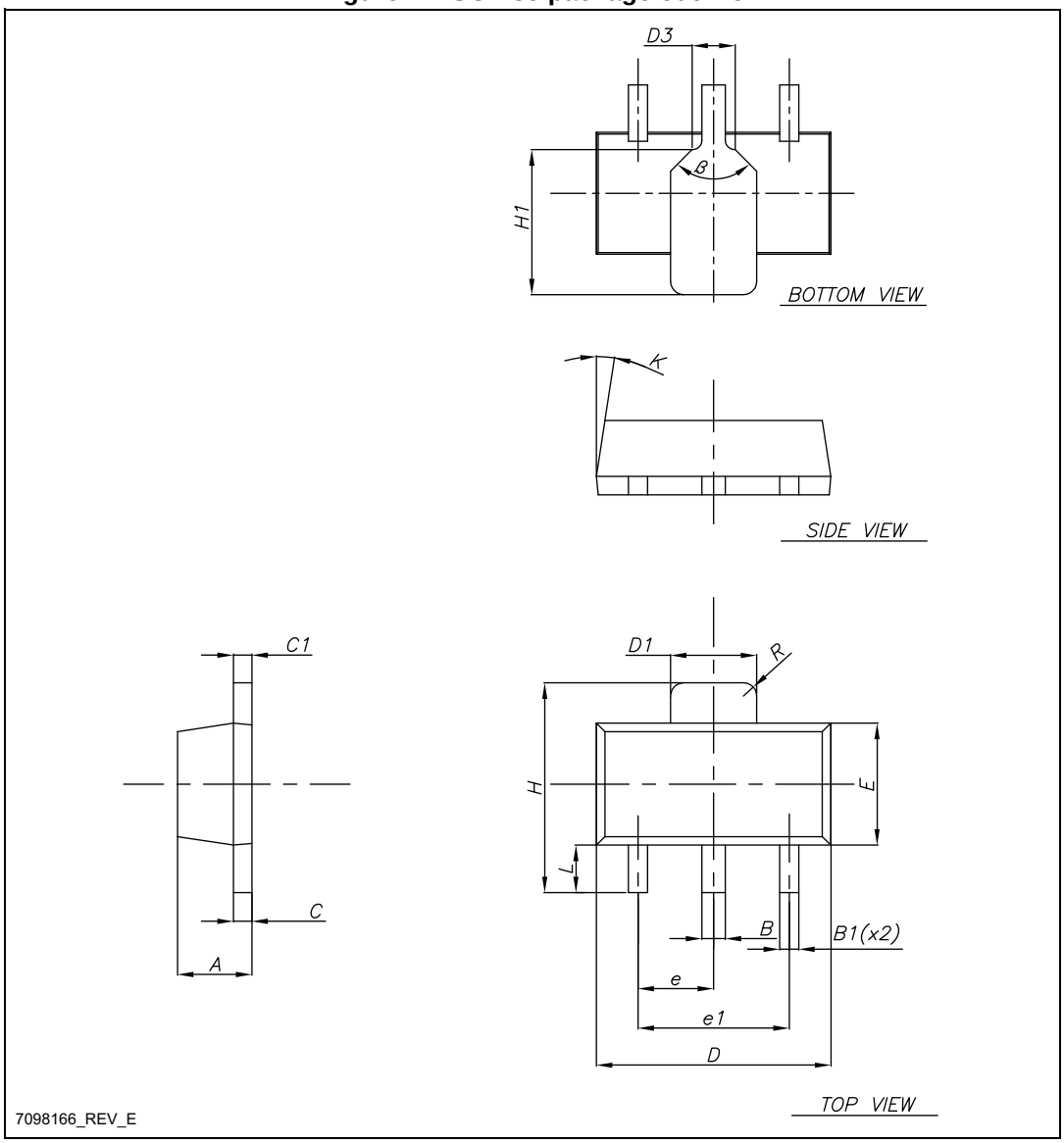

Table 26. SOT-89 mechanical data

Dim.	mm		
	Min.	Typ.	Max.
A	1.40		1.60
B	0.44		0.56
B1	0.36		0.48
C	0.35		0.44
C1	0.35		0.44
D	4.40		4.60
D1	1.62		1.83
D3		0.90	
E	2.29		2.60
e	1.42		1.57
e1	2.92		3.07
H	3.94		4.25
H1	2.70		3.10
K	1°		8°
L	0.89		1.20
R		0.25	
b		90°	

Figure 25. SOT-89 recommended footprint

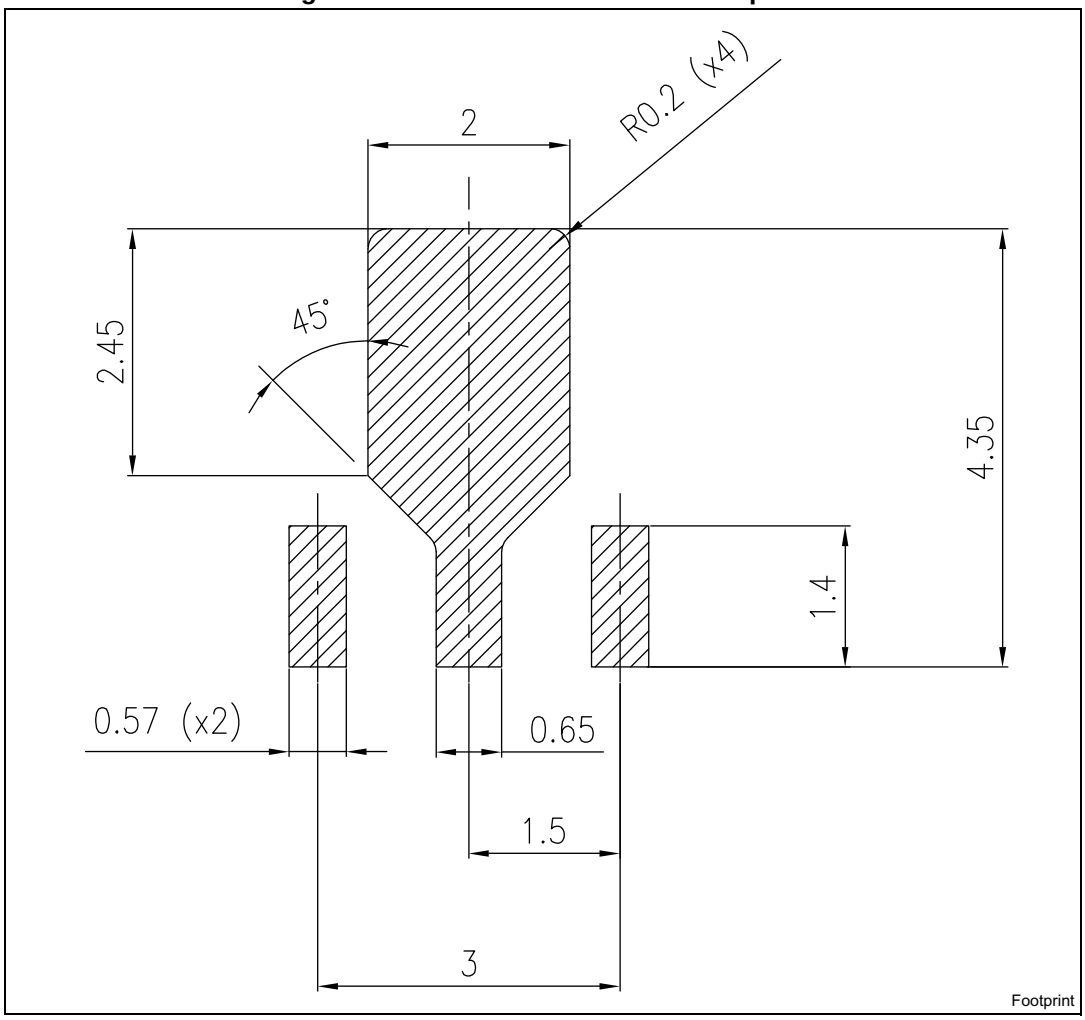

7.7 SOT-89 packing information

Figure 26. SOT-89 carrier tape outline

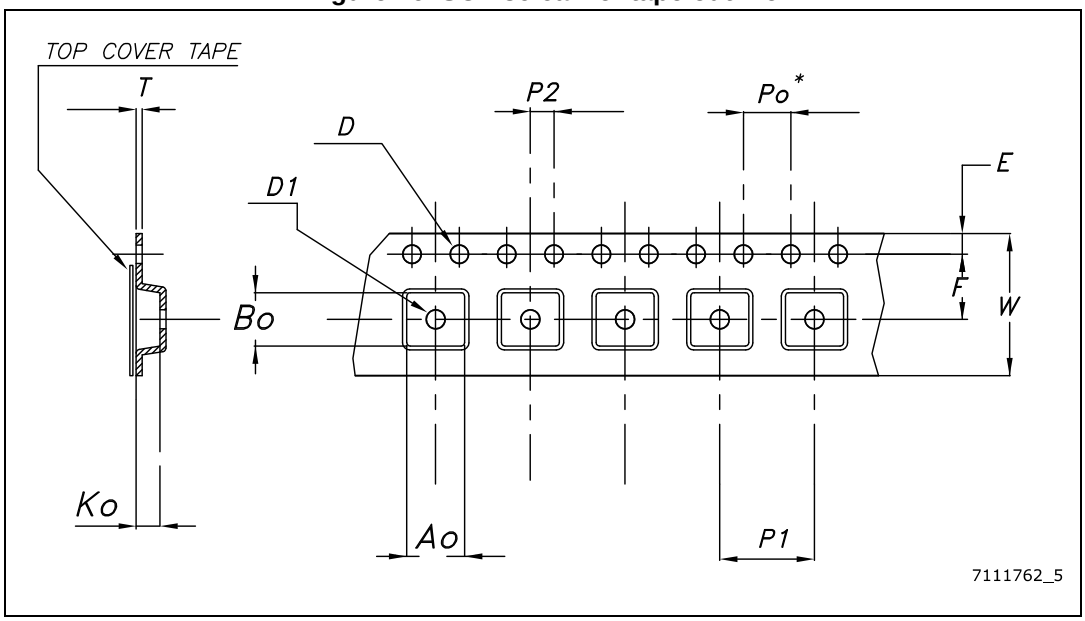

Table 27. SOT-89 carrier tape dimensions

Dim.	mm.	
	Values	Tolerance
Ao	4.91	± 0.10
Bo	4.52	± 0.10
Ko	1.90	± 0.10
F	5.50	± 0.10
E	1.75	± 0.10
W	12	± 0.30
P2	2	± 0.10
Po	4	± 0.10
P1	8	± 0.10
T	0.30	± 0.10
D	Ø 1.55	± 0.05
D1	Ø 1.60	± 0.10

8 Ordering information

Table 28. Order codes

Part numbers					Output voltages (V)
SO-8	TO-92 (Bag) [1]	TO-92 (ammopack)	TO-92 (tape and reel)	SOT-89	
L78L33ABD-TR		L78L33ABZ-AP		L78L33ABUTR	3.3
L78L33ACD13TR	L78L33ACZ	L78L33ACZ-AP	L78L33ACZTR	L78L33ACUTR	3.3
L78L33CD-TR					3.3
L78L05ABD13TR	L78L05ABZ	L78L05ABZ-AP	L78L05ABZ-TR	L78L05ABUTR	5
L78L05ACD13TR	L78L05ACZ	L78L05ACZ-AP	L78L05ACZTR	L78L05ACUTR	5
L78L05CD13TR	L78L05CZ				5
	L78L06ABZ			L78L06ABUTR	6
L78L06ACD13TR				L78L06ACUTR	6
L78L08ABD13TR		L78L08ABZ-AP	L78L08ABZTR	L78L08ABUTR	8
L78L08ACD13TR	L78L08ACZ	L78L08ACZ-AP	L78L08ACZTR	L78L08ACUTR	8
L78L08CD13TR					8
L78L09ABD13TR	L78L09ABZ			L78L09ABUTR	9
L78L09ACD13TR		L78L09ACZ-AP	L78L09ACZ-TR	L78L09ACUTR	9
L78L09CD13TR					9
				L78L10ACUTR	10
L78L12ABD-TR	L78L12ABZ	L78L12ABZ-AP		L78L12ABUTR	12
L78L12ACD13TR	L78L12ACZ	L78L12ACZ-AP	L78L12ACZ-TR	L78L12ACUTR	12
L78L12CD13TR					12
		L78L15ABZ-AP		L78L15ABUTR	15
L78L15ACD13TR	L78L15ACZ			L78L15ACUTR	15
L78L15CD-TR					15
				L78L18ACUTR	18
L78L18CD13TR					18
	L78L24ABZ-TR				24
			L78L24ACZ-AP	L78L24ACUTR	24
L78L24CD-TR					24

1. Available in Ammopak with the suffix "-AP" or in tape and reel with the suffix "TR". Please note that in these cases pins are shaped according to tape and reel specifications.

Table 29. Marking information

Part numbers	Marking	Packages	Output voltages
L78L05ABD13TR	78L05B	SO-8	5 V
L78L05ABUTR	8C	SOT-89	5 V
L78L05ABZ	L78L05A	TO-92	5 V
L78L05ABZ-AP	L78L05A	TO-92	5 V
L78L05ABZ-TR	L78L05A	TO-92	5 V
L78L05ACD13TR	78L05A	SO-8	5 V
L78L05ACUTR	8C	SOT-89	5 V
L78L05ACZ	L78L05A	TO-92	5 V
L78L05ACZ-AP	L78L05A	TO-92	5 V
L78L05ACZTR	L78L05A	TO-92	5 V
L78L05CD13TR	78L05	SO-8	5 V
L78L05CZ	L78L05A	TO-92	5 V
L78L06ABUTR	8E	SOT-89	6 V
L78L06ABZ	L78L06A	TO-92	6 V
L78L06ACD13TR	L78L06A	SO-8	6 V
L78L06ACUTR	8E	SOT-89	6 V
L78L08ABD13TR	78L08B	SO-8	8 V
L78L08ABUTR	8G	SOT-89	8 V
L78L08ABZ-AP	L78L08A	TO-92	8 V
L78L08ABZTR	L78L08A	TO-92	8 V
L78L08ACD13TR	78L08A	SO-8	8 V
L78L08ACUTR	8G	SOT-89	8 V
L78L08ACZ	L78L08A	TO-92	8 V
L78L08ACZ-AP	L78L08A	TO-92	8 V
L78L08ACZTR	L78L08A	TO-92	8 V
L78L08CD13TR	78L08	SO-8	8 V
L78L09ABD13TR	78L09B	SO-8	8 V
L78L09ABZ	L78L09A	TO-92	9 V
L78L09ABUTR	8H	SOT-89	9 V
L78L09ACD13TR	78L09A	SO8	9 V
L78L09ACUTR	8H	SOT-89	9 V
L78L09ACZ-AP	L78L09A	TO-92	9 V
L78L09ACZ-TR	L78L09A	TO-92	9 V
L78L09CD13TR	L78L09A	SO-8	9 V
L78L10ACUTR	8I	SOT-89	10 V

Table 29. Marking information (continued)

Part numbers	Marking	Packages	Output voltages
L78L12ABD-TR	78L12B	SO-8	12 V
L78L12ABUTR	8K	SOT-89	12 V
L78L12ABZ	L78L12A	TO-92	12 V
L78L12ABZ-AP	L78L12A	TO 92	12 V
L78L12ACD13TR	78L12A	SO-8	12 V
L78L12ACUTR	8K	SOT-89	12 V
L78L12ACZ	L78L12A	TO-92	12 V
L78L12ACZ-AP	L78L12A	TO-92	12 V
L78L12ACZ-TR	L78L12A	TO-92	12 V
L78L12CD13TR	78L12	SO-8	12 V
L78L15ABUTR	8L	SOT-89	15 V
L78L15ABZ-AP	L78L15A	TO-92	15 V
L78L15ACD13TR	78L15A	SO-8	15 V
L78L15ACUTR	8L	SOT-89	15 V
L78L15ACZ	L78L15A	TO-92	15 V
L78L15CD-TR	78L15	SO-8	15 V
L78L18ACUTR	8B	SOT-89	18 V
L78L18CD13TR	L78L18	SO-8	18 V
L78L24ABZ-TR	L78L24A	TO-92	24 V
L78L24ACUTR	8P	SOT-89	24 V
L78L24ACZ-AP	L78L24A	TO-92	24 V
L78L24CD-TR	78L24	SO-8	24 V
L78L33ABD-TR	78L33B	SO-8	3.3 V
L78L33ABUTR	8A	SOT-89	3.3 V
L78L33ABZ-AP	L78L33A	TO-92	3.3 V
L78L33ACD13TR	78L33A	SO-8	3.3 V
L78L33ACUTR	8A	SOT-89	3.3 V
L78L33ACZ	L78L33A	TO-92	3.3 V
L78L33ACZ-AP	L78L33A	TO-92	3.3 V
L78L33ACZTR	L78L33A	TO-92	3.3 V

9 Revision history

Table 30. Document revision history

Date	Revision	Changes
14-Mar-2005	9	Add tape and reel for TO-92.
15-Mar-2005	10	Add note on Table 3.
23-Dec-2005	11	Mistake on ordering Table in header.
12-Sep-2006	12	Order codes updated.
07-Jun-2007	13	Order codes updated.
18-Sep-2007	14	Added Table 1 in cover page.
15-Jul-2008	15	Modified: Table 1 and Table 28: Order codes.
18-Aug-2008	16	Modified Figure 12 on page 26.
03-Apr-2009	17	Added: RthJA value for SOT-89 Table 2 on page 5.
08-Feb-2011	18	Added note Table 26 on page 39
21-Feb-2012	19	Modified: SOT-89 Figure 2 on page 4.
14-Aug-2012	20	Updated TOP value for L78L00AC in Table 1 on page 5. Minor text changes.
07-Sep-2012	21	Added: Table 29: Marking information.
14-Apr-2014	22	Part numbers L78LxxAB, L78LxxAC, L78LxxC changed to L78L. Removed Table1: Device summary. Updated features and description in cover page, Table 28: Order codes, Table 29: Marking information and Section 7: Package information. Added Section: Packing mechanical data. Minor text changes.
06-Oct-2014	23	Updated Table 28: Order codes and Table 29: Marking information. Minor text changes.
10-Feb-2015	24	Updated Table 29: Marking information. Minor text changes.
10-Feb-2016	25	Updated *Table 29: Marking information* and *Section 7.7: SOT-89 packing information*. Minor text changes.

IMPORTANT NOTICE – PLEASE READ CAREFULLY

STMicroelectronics NV and its subsidiaries (“ST”) reserve the right to make changes, corrections, enhancements, modifications, and improvements to ST products and/or to this document at any time without notice. Purchasers should obtain the latest relevant information on ST products before placing orders. ST products are sold pursuant to ST’s terms and conditions of sale in place at the time of order acknowledgement.

Purchasers are solely responsible for the choice, selection, and use of ST products and ST assumes no liability for application assistance or the design of Purchasers’ products.

No license, express or implied, to any intellectual property right is granted by ST herein.

Resale of ST products with provisions different from the information set forth herein shall void any warranty granted by ST for such product.

ST and the ST logo are trademarks of ST. All other product or service names are the property of their respective owners.

Information in this document supersedes and replaces information previously supplied in any prior versions of this document.

© 2016 STMicroelectronics – All rights reserved

ENTEGRECİ

Bu belge www.entegreci.com üzerinden sunulmaktadır.

Elektronik komponent tedarikinde Entegreci

Entegreci, Eskişehir merkezli, Türkiye geneline satış yapan bir elektronik komponent mağazasıdır. Entegreler (IC), mikrodenetleyiciler, transistörler, diyotlar, pasif elemanlar, konnektörler, modüller ve geliştirme kartları tek adetten seri üretim adetlerine kadar satılır. Ürün sayfalarında güncel stok durumunu, fiyatı ve datasheet bağlantısını bulabilirsiniz.

Parça koduyla arama

Üretici parça numarasını yazın; stok ve fiyatı hemen görün.

www.entegreci.com

Ürün kategorileri

Entegreden kapasitöre tüm elektronik komponent kategorileri.

Kategorilere göz atın

Üreticiler

Aradığınız üreticinin ürünlerini tek sayfada inceleyin.

Üreticileri görün

Toplu alım ve teklif

Listede olmayan ya da yüksek adetli parçalar için teklif isteyin.

Teklif isteyin

www.entegreci.com | **destek@entegreci.com** | **0850 305 90 34**

Entegreci is an online electronic components store based in Türkiye. Search by manufacturer part number to see stock, prices and datasheets for integrated circuits, microcontrollers, transistors, passive components and connectors, or request a quote for parts that are not listed.

Bu sayfa Entegreci tarafından eklenmiştir. Belgenin önceki sayfaları asıl yayıncısına aittir ve içeriği değiştirilmemiştir; en güncel sürüm için belgenin yayıncısına başvurun.