SGS-THOMSON MICROELECTRONICS

L6376

0.5A HIGH-SIDE DRIVER QUAD INTELLIGENT POWER SWITCH

- 0.5 A FOUR INDEPENDENT OUTPUTS
- 9.5 TO 35 V SUPPLY VOLTAGE RANGE
- INTERNAL CURRENT LIMIT
- NON-DISSIPATIVE OVER-CURRENT PROTECTION
- THERMAL SHUTDOWN
- UNDER VOLTAGE LOCKOUT WITH HYSTERESYS
- DIAGNOSTIC OUTPUT FOR UNDER VOLTAGE, OVER TEMPERATURE AND OVER CURRENT
- EXTERNAL ASYNCHRONOUS RESET INPUT
- PRESETTABLE DELAY FOR OVERCURRENT DIAGNOSTIC
- OPEN GROUND PROTECTION
- IMMUNITY AGAINST BURST TRANSIENT (IEC 801-4)
- ESD PROTECTION (HUMAN BODY MODEL ± 2KV)

MULTIPOWER BCD TECHNOLOGY

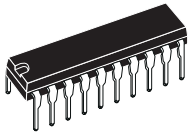

POWERDIP 16+2+2

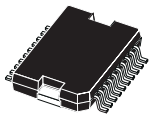

PowerSO20

ORDERING NUMBERS: L6376 (DIP
L6376PD (PSO)

DESCRIPTION

This device is a monolithic quad Intelligent Power Switch in Multipower BCD Technology, for driving inductive, capacitive or resistive loads. Diagnostic for CPU feedback and extensive use of electrical protections make this device inherently indistructible and suitable for general purpose industrial applications.

BLOCK DIAGRAM

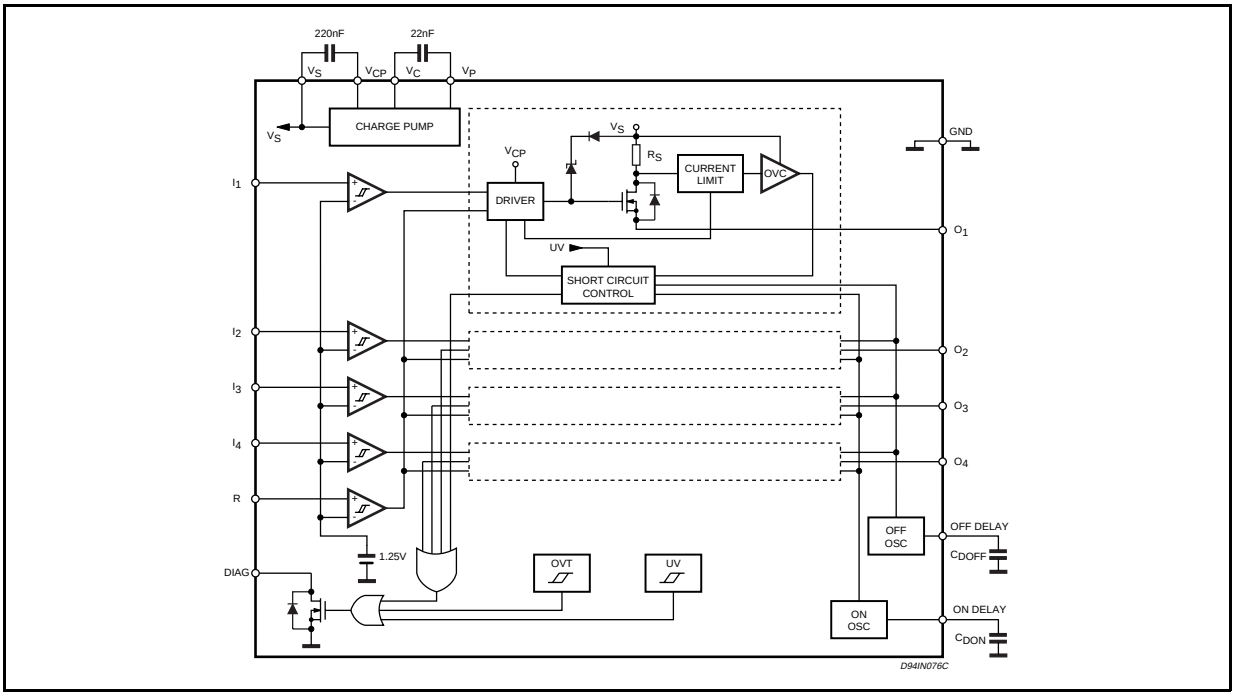

ABSOLUTE MAXIMUM RATINGS (Pin numering referred to PowerSO20 package)

Symbol	Pin	Parameter	Value	Unit
V_s	6	Supply Voltage ($t_w \leq 10ms$)	50	V
		Supply Voltage (DC)	40	V
$V_s - V_{out}$		Difference between supply voltage and output voltage	internally limited	
V_{id}	16, 17	Externally Forced Voltage	-0.3 to 7	V
I_{id}		Externally Forced Current	±1	mA
I_i	12, 13, 14, 15, 18	Channel Input Current (forced)	±2	mA
V_i		Channel Input Voltage	-0.3 to 40	V
I_{out}	2, 3, 8, 9	Output Current (see also I_{sc})	internally limited	
V_{out}		Output Voltage	internally limited	
E_{il}		Energy Inductive Load (T_j =125°C); Each Channel	200	mJ
P_{tot}		Power Dissipation	internally limited	
V_{diag}	19	External voltage	-0.3 to V_s+0.7	V
I_{diag}		Externally forced current	-10 to 10	mA
T_{op}		Ambient temperature, operating range	-25 to 85	°C
T_j		Junction temperature, operating range (see Overtemperature Protection)	-25 to 125	°C
T_{stg}		Storage temperature	-55 to 150	°C

PIN CONNECTIONS (Top view)

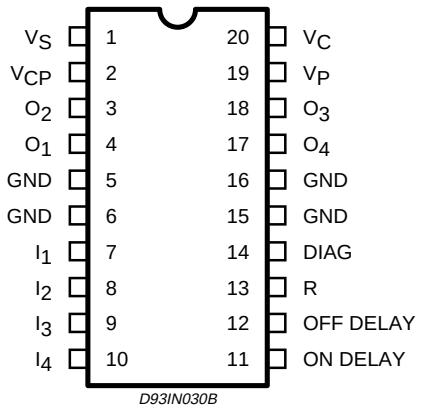

POWERDIP

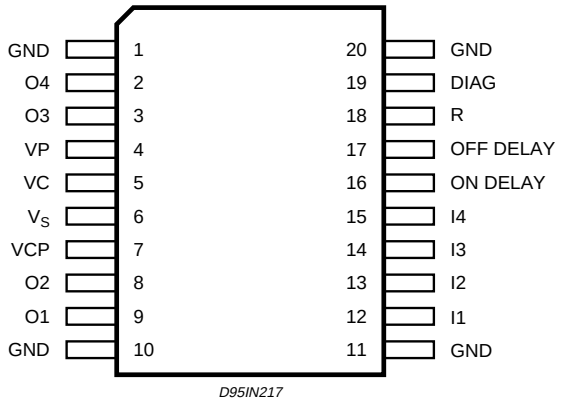

PowerSO20

PIN DESCRIPTION (Pin numering referred to PowerSO20 package).

No	Pins	Function
6	V_S	Positive supply voltage. An internal circuit, monitoring the supply voltage, maintains the IC in off-state until V_S reaches 9V or when V_S falls under 8.5V. The diagnostic is availlable since V_S = 5V.
7	V_{CP}	Switch driver supply. To minimize the output drop voltage, a supply of about 10V higher than V_S is required. In order to use the built-in charge pump, connect a filter capacitor from pin1 to pin. The suggested value assures a fast transition and a low supply ripple even in worse condition. Using the four channels contemporarily, values less than 68nF have to be avoided.
2, 3, 8, 9	O_1, O_2, O_3, O_4	High side outputs. Four independently controlled outputs with built-in current limitation.
1, 10, 11, 20	GND	Ground and power dissipating pins. These pins are connected to the bulk ground of the IC, so are useful for heat dissipation.
12,13, 14, 15	I_1, I_2, I_3, I_4	Control inputs. Four independent control signals. The output is held off until the voltage at the corresponding input pin reaches 1.35V and is turned off when the voltage at the pin goes below 1.15V.
16	ON DELAY	Programmable ON duration in short circuit. If an output is short circuited to ground or carryng a current exceeding the limit, the output is turned-off and the diagnostic activation are delayed. This procedure allows the driving of hard surge current loads. The delay is programmed connecting a capacitor (50pF to 15nF) versus ground with the internal time constant of 1.28µs/pF. The function can be disabled short circuiting this pin to ground.
17	OFF DELAY	Programmable OFF duration in short circuit. After the short circuit or overcurrent detection, the switch is held off before the next attempt to switch on again. The delay is programmed connecting a capacitor (50pF to 15nF) versus ground with the internal time constant of 1.28µs/pF. Short circuiting this pin to ground the OFF delay is 64 times the ON delay.
18	R	Asyncronous reset input. This active low input (with hysteresis), switch off all the outputs independently from the input signal. By default it is biased low.
19	DIAG	Diagnostic output. This open drain output reports the IC working condition. The bad condition (as undervoltage, overcurrent, overtemperature) turns the output low.
5	V_C	Pump oscillator voltage. At this pin is available the built-in circuitry to supply the switch driver at about 10V higher than V_S. To use this feature, connect a capacitor across pin 4 and pin 5. The suggested value assures a fast transition and a minimum output drop voltage even in worse condition. Using the four channels contemporarily, values less than 6.8nF have to be avoided.
4	V_P	Bootstrapped voltage. At this pin is available the 11V oscillation for the charge pump, at a typical frequency of 200kHz.

ELECTRICAL CHARACTERISTICS (V_S = 24V; T_j = -25 to 125°C; unless otherwise specified.)

DC OPERATION (Pin numering referred to PowerSO20 package).

Symbol	Pin	Parameter	Test Condition	Min.	Typ.	Max.	Unit
V_s	6	Supply Voltage		9.5	24	35	V
V_{sth}		UV UpperThreshold		8.5	9	9.5	V
V_{shys}		UV Hysteresis		200	500	800	mV
I_{qsc}		Quiescent Current	Outputs ON, No load		3	5	mA
V_{il}	12,13, 14,15, 18	Input Low Level		0		0.8	V
V_{ih}		Input High Level		2		40	V
I_{bias}		Input Bias Current	V_i = 0V	-5	-1	0	µA
			V_i = 40V	0	5	20	µA
V_{ihys}		Input Comparators Hysteresis		100	200	400	mV
Θ_{lim}		OVT Upper Threshold			150		°C
Θ_H		Threshold Hysteresis			20	30	°C
I_{sc}	2, 3, 8, 9	Short Circuit Current	V_s=9.5 to 35V; R_l =2Ω	0.65	0.9	1.2	A
		Output Voltage Drop	I_{out} =500mA; T_j =25°C		320	500	mV
			I_{out} =500mA; T_j =125°C		460	640	mV
I_{olk}		Output Leakage Current	V_o=0V; V_i<0.8V			100	µA
V_{cl}		Internal Voltage Clamp (V_s-V_o each Output)	I_o=100mA single pulsed T_p=300µs	47	52	57	V
V_{ol}		Low State Output Voltage	V_i = V_{il}; R_L = ∞		0.8	1.5	V
I_{dlkg}	19	Diagnostic Output Leakage	Diagnostic Off			25	µA
V_{diag}		Diagnostic Output Voltage Drop	I_{diag} = 5mA			1.5	V
I_{dch}	16, 17	Delay Capacitors Charge Current			40		µA

AC OPERATION (Pin numering referred to PowerSO20 package).

Symbol	Pin	Parameter	Test Condition	Min.	Typ.	Max.	Unit
t_r -t_f	2, 3, 8, 9	Rise or Fall Time	V_S = 24V; R_I = 47Ω R_I to ground		3.8		µs
t_d	12 vs 9 13 vs 8 14 vs 3 15 vs 2	Delay Time			1		µs
dV/dt	2, 3, 8, 9	Slew Rate (Rise and Fall Edge)	V_S = 24V; R_I = 47Ω RISE R_I to ground FALL	3 4	5 7.6	7 10	V/µs
t_{ON}	16	On Time during Short Circuit Condition	50 pF < C_{DON} < 15nF		1.28		µs/pF
t_{OFF}	17	Off Time during Short Circuit Condition	pin 13 grounded		64		t_{ON}
			50pF < C_{DOFF} < 15nF		1.28		µs/pF
f_{max}		Maximum Operating Frequency			25		kHz

SOURCE DRAIN NDMOS DIODE

Symbol	Parameter	Test Condition	Min.	Typ.	Max.	Unit
V_{fsd}	Forward On Voltage	I_{fsd} = 500mA		1	1.5	V
I_{fp}	Forward Peak Current	t_p = 10ms; duty cycle = 20%			1.5	A
t_{rr}	Reverse Recovery Time	I_{fsd} = 500mA; dI_{fsd}/dt = 25A/µs		200		ns
t_{fr}	Forward Recovery Time			50		ns

UNDERVOLTAGE COMPARATOR HYSTERESIS

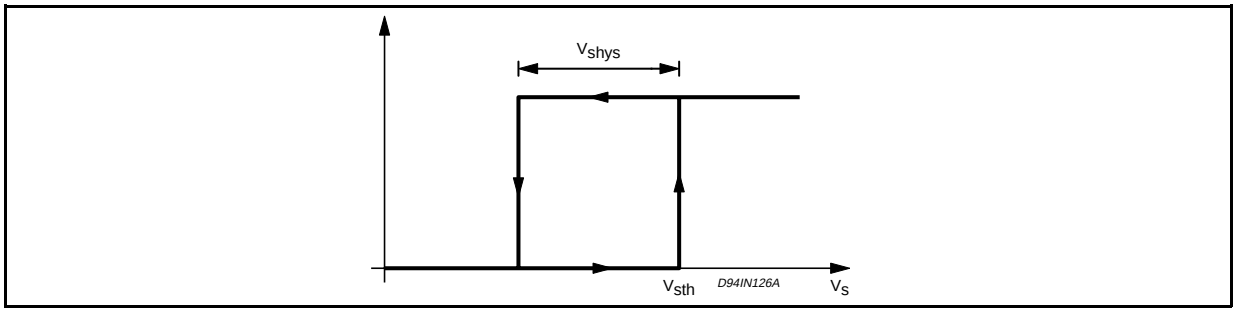

SWITCHING WAVEFORMS

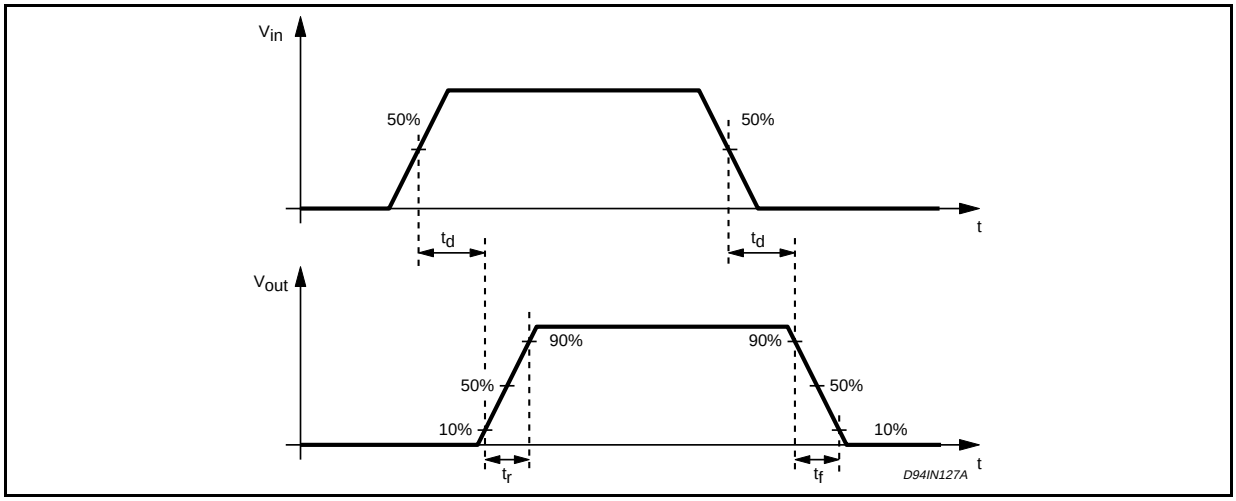

THERMAL DATA

Symbol	Parameter	DIP16+2+2	PowerSO20	Unit
$R_{th\ j\text{-}pin}$	Thermal Resistance, Junction to Pin	12	–	°C/W
$R_{th\ j\text{-}amb1}$	Thermal Resistance, Junction to Ambient (see Thermal Characteristics)	40	–	°C/W
$R_{th\ j\text{-}amb2}$	Thermal Resistance, Junction to Ambient (see Thermal Characteristics)	50	–	°C/W
$R_{th\ j\text{-}case}$	Thermal Residance Junction-case	–	1.5	°C/W

THERMAL CHARACTERISTICS

$R_{th\ j\text{-}pins}$

DIP16+2+2. The thermal resistance is referred to the thermal path from the dissipating region on the top surface of the silicon chip, to the points along the four central pins of the package, at a distance of 1.5 mm away from the stand-offs.

$R_{th\ j\text{-}amb1}$

If a dissipating surface, thick at least 35 µm, and with a surface similar or bigger than the one shown, is created making use of the printed circuit.
Such heatsinking surface is considered on the bottom side of an horizontal PCB (worst case).

$R_{th\ j\text{-}amb2}$

If the power dissipating pins (the four central ones), as well as the others, have a minimum thermal connection with the external world (very thin strips only) so that the dissipation takes place through still air and through the PCB itself.

It is the same situation of point above, without any heatsinking surface created on purpose on the board.

Additional data on the PowerDip and the PowerSO20 package can be found in:

Application Note AN467:
Thermal Characteristics of the PowerDip 20,24 Packages Soldered on 1,2,3 oz. Copper PCB

Application Note AN668:
A New High Power IC Surface Mount Package: PowerSO20 Power IC Packaging from Insertion to Surface Mounting.

Figure 1: Printed Heatsink

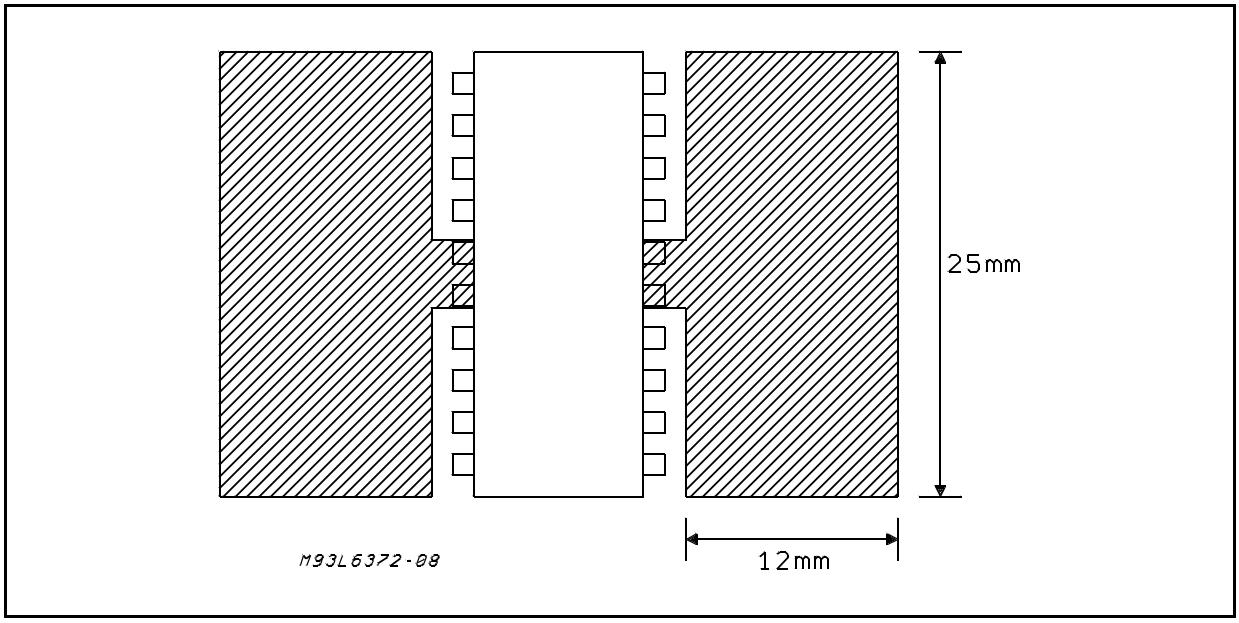

OVERTEMPERATURE PROTECTION (OVT)

If the chip temperature exceeds Θ_{lim} (measured in a central position in the chip) the chip deactivates itself.
The following actions are taken:

- all the output stages are switched off;
- the signal DIAG is activated (active low).

Normal operation is resumed as soon as (typically after some seconds) the chip temperature monitored goes back below Θ_{lim}-Θ_H.
The different thresholds with hysteretic behavior assure that no intermittent conditions can be generated.

UNDERVOLTAGE PROTECTION (UV)

The supply voltage is expected to range from 9.5V to 35V, even if its reference value is considered to be 24V.
In this range the device operates correctly.
Below 9.5V the overall system has to be considered not reliable.
Consequently the supply voltage is monitored continuously and a signal, called UV, is internally generated and used.
The signal is “on” as long as the supply voltage does not reach the upper internal threshold of the V_s comparator V_{sth}. The UV signal disappears above V_{sth}.
Once the UV signal has been removed, the supply voltage must decrease below the lower threshold (i.e. V_{sth}-V_{shys}) before it is turned on again.
The hysteresis V_{shys} is provided to prevent intermittent operation of the device at low supply voltages that may have a superimposed ripple around the average value.
The UV signal switches off the outputs, but has no effect on the creation of the reference voltages for the internal comparators, nor on the continuous operation of the charge-pump circuits.

DIAGNOSTIC LOGIC

The situations that are monitored and signalled with the DIAG output pin are:

- current limit (OVC) in action; there are 4 individual current limiting circuits, one per each output; they limit the current that can be sunk from each output, to a typical value of 800mA, equal for all of them;
- under voltage (UV);
- over temperature protection (OVT).

The diagnostic signal is transmitted via an open drain output (for ease of wired-or connection of several such signals) and a low level represents the presence of at least one of the monitored conditions, mentioned above.

SHORT CIRCUIT OPERATION

In order to allow normal operation of the other inputs when one channel is in short cirtuit, an innovative non dissipative over current protection (patent pending) is implemented in the device.

Figure 2: Short Circuit Operation Waveforms

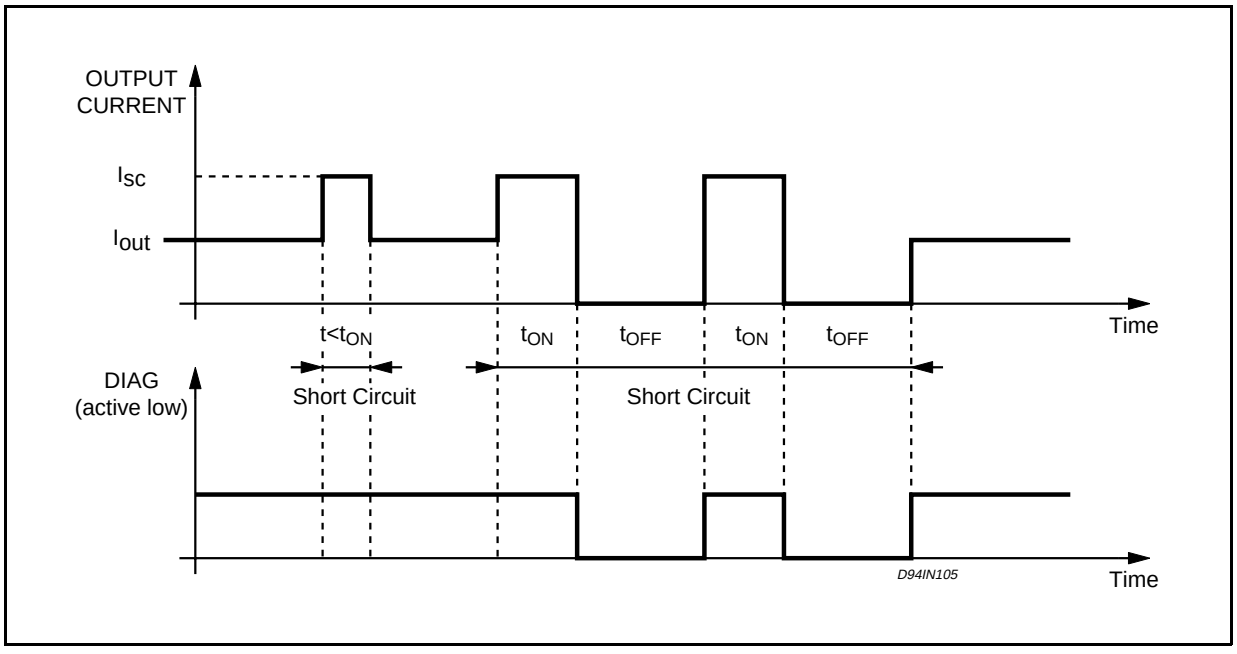

In this way, the temperature of the device is kept enough low to prevent the intervention of the thermal protection (in most of the cases) and so to avoid the shut down of the whole device.

If a short circuit condition is present on one output, the current limiting circuit puts that channel in linear mode — sourcing the I_{SC} current (typically 800 mA) — for a time period (t_{ON}) defined by an external capacitor (C_{DON} connected to the ON DELAY pin).

After that period, if the short circuit condition is still present the output is turned off for another time period (t_{OFF}) defined by a second external capacitor (C_{DOFF} connected to the OFF DELAY pin).

When also this period is expired:

- if the short circuit condition is still present the output stays on for the t_{ON} period and the sequence starts again;
- if the short circuit condition is not present anymore the normal operation of the output is resumed.

The t_{ON} and t_{OFF} periods are completely independent and can be set from 64 µs to 15 ms, using external capacitors ranging from 50 pF to 15 nF (1.28 µs/pF).

If the OFF DELAY pin is tied to ground (i.e. the C_{DOFF} capacitor is not used) the t_{OFF} time period is 64 times the t_{ON} period.

The diagnostic output (DIAG) is active when the output is switched off, while it is not active when the output is on (i.e. during the t_{ON} period) even if in that period a short circuit condition is present.

Typical waveforms for short circuit operation are shown in figure 2.

If both the ON DELAY and the OFF DELAY pins are grounded the non dissipative over current protection is inhibited and the outputs in short circuit remain on until the thermal shutdown switch off the whole device. In this case the short circuit condition is not signalled by the DIAG pin (that continues to signal the under voltage and over temperature conditions).

PROGRAMMABLE DIAGNOSTIC DELAY

The current limiting circuits can be requested to perform even in absence of a real fault condition, for a short period, if the load is of capacitive nature or if it is a filament lamp (that exhibits a very low resistance during the initial heating phase).

To avoid the forwarding of misleading — i.e. short diagnostic pulses in coincidence with the intervention of the current limiting circuits when operating on capacitive loads — the activation of the diagnostic can be delayed with respect to the intervention of one of the current limiting circuits.

This delay can be defined by an external capacitor (C_{DON}) connected between the ON DELAY pin and ground.

RESET INPUT

An external reset input R (pin 18) is provided to simultaneously switch off all the outputs: this signal (active low) is in effect an asynchronous reset that keeps the outputs low independently from the input signals.

For example, this reset input can be used by the CPU to keep the outputs low after a fault condition (signaled by the DIAG pin).

DEMAGNETIZATION OF INDUCTIVE LOADS

The device has four internal clamping diodes able to demagnetize inductive loads.

The limitation is the peak power dissipation of the packages, so — if the loads are big or if there is the possibility to demagnetize more loads contemporarly — it is necessary to use external demagnetization circuits.

In figures 4 and 5 are shown two topologies for the demagnetization versus ground and versus V_S.

The breakdown voltage of the external device (V_Z) must be chosen considering the minimum internal clamping voltage (V_{cl}) and the maximum supply voltage (V_S).

Figure 3: Input Comparator Hysteresis

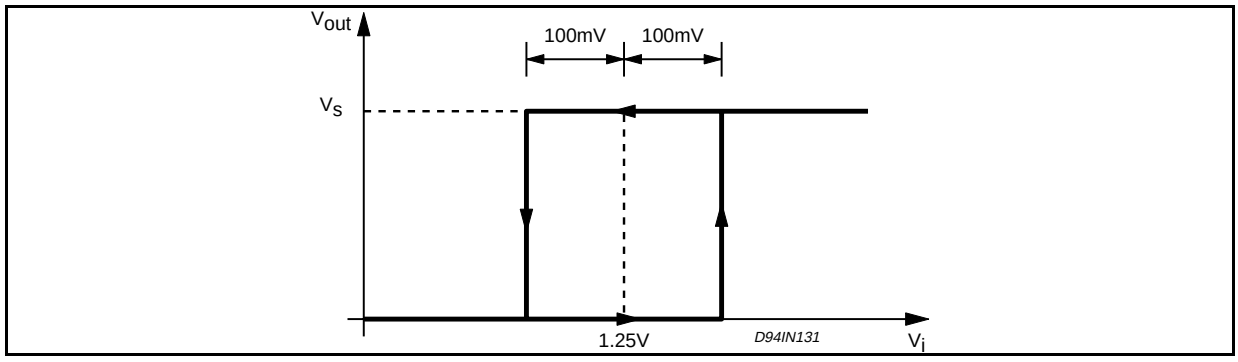

Figure 4: External Demagnetization Circuit (versus ground)

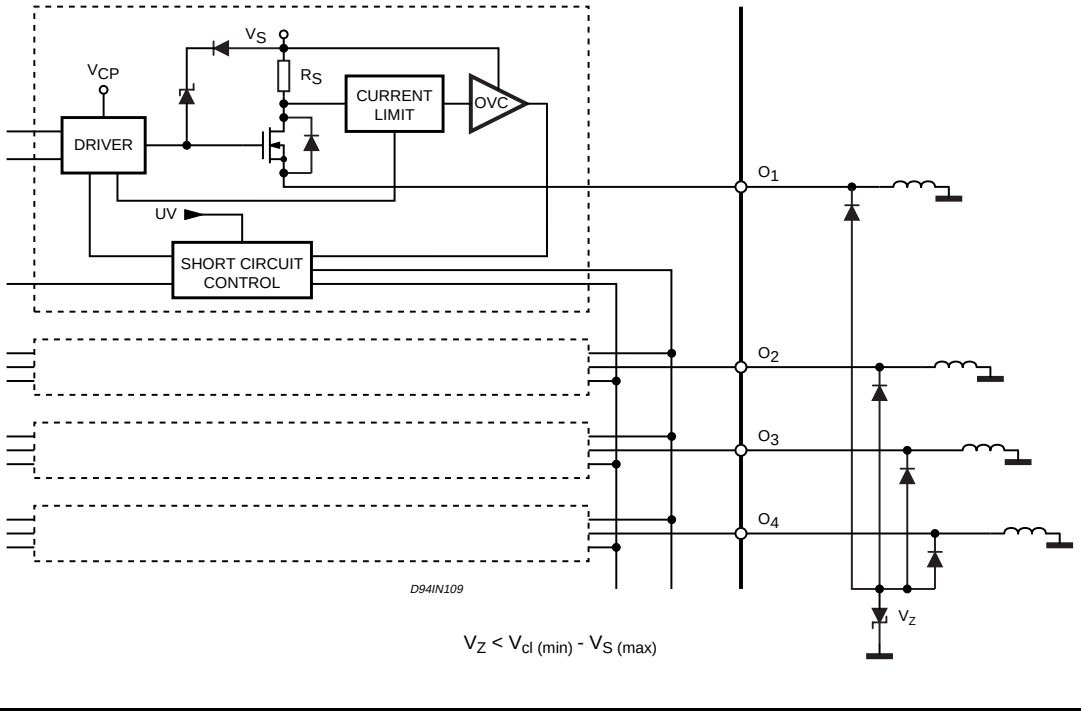

$V_Z < V_{cl\ (min)} - V_{S\ (max)}$

Figure 5: External Demagnetization Circuit (versus V_S)

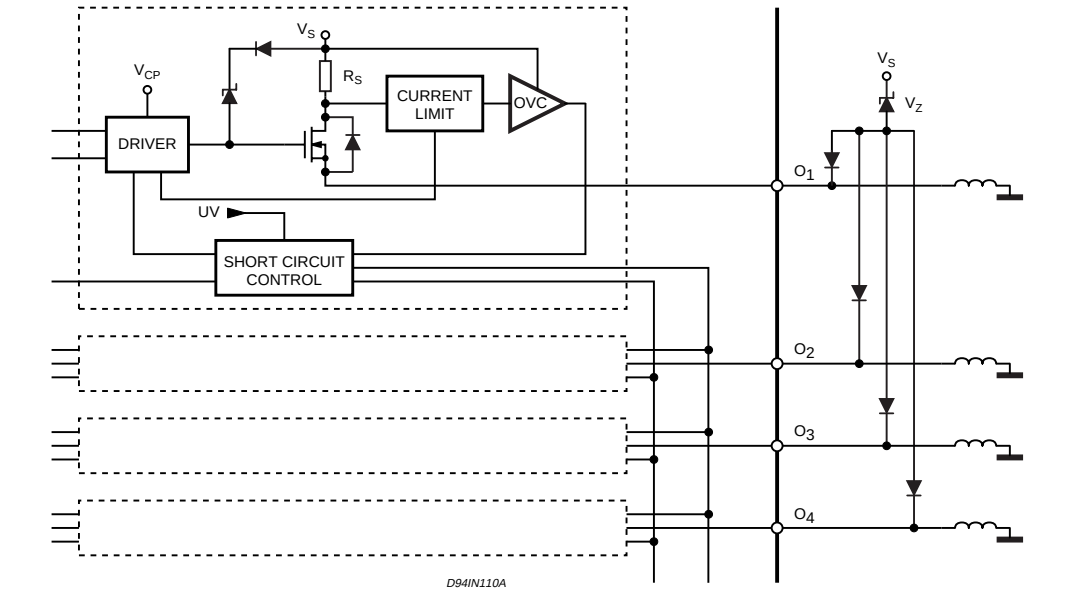

$V_{S\ (max)} < V_Z < V_{cl\ (min)}$

POWERDIP 20 PACKAGE MECHANICAL DATA

DIM.	mm			inch		
	MIN.	TYP.	MAX.	MIN.	TYP.	MAX.
a1	0.51			0.020		
B	0.85		1.40	0.033		0.055
b		0.50			0.020	
b1	0.38		0.50	0.015		0.020
D			24.80			0.976
E		8.80			0.346	
e		2.54			0.100	
e3		22.86			0.900	
F			7.10			0.280
I			5.10			0.201

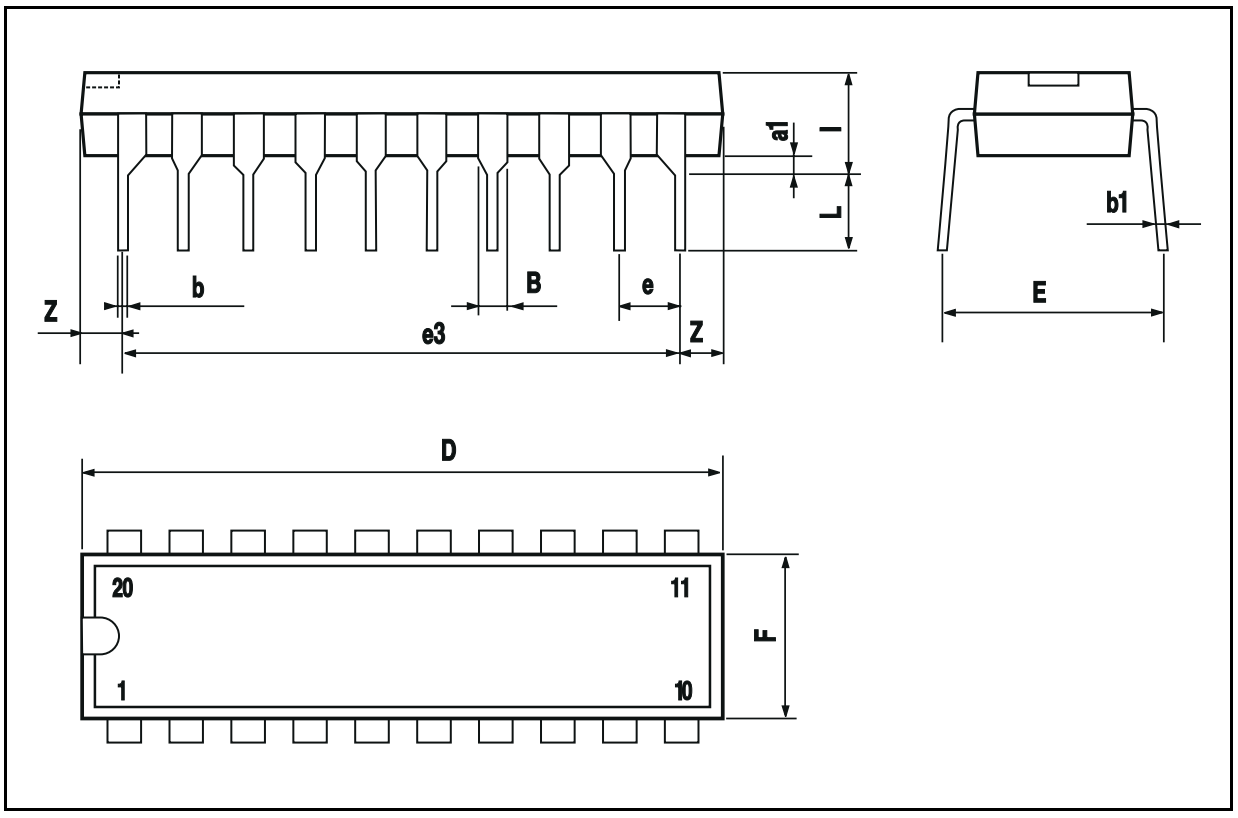

PowerSO20 PACKAGE MECHANICAL DATA

DIM.	mm			inch		
	MIN.	TYP.	MAX.	MIN.	TYP.	MAX.
A			3.60			0.1417
a1	0.10		0.30	0.0039		0.0118
a2			3.30			0.1299
a3	0		0.10	0		0.0039
b	0.40		0.53	0.0157		0.0209
c	0.23		0.32	0.009		0.0126
D (1)	15.80		16.00	0.6220		0.6299
E	13.90		14.50	0.5472		0.570
e		1.27			0.050	
e3		11.43			0.450	
E1 (1)	10.90		11.10	0.4291		0.437
E2			2.90			0.1141
G	0		0.10	0		0.0039
h			1.10			
L	0.80		1.10	0.0314		0.0433
N	10° (max.)					
S	8° (max.)					
T		10.0			0.3937	

(1) "D and E1" do not include mold flash or protrusions
- Mold flash or protrusions shall not exceed 0.15mm (0.006")

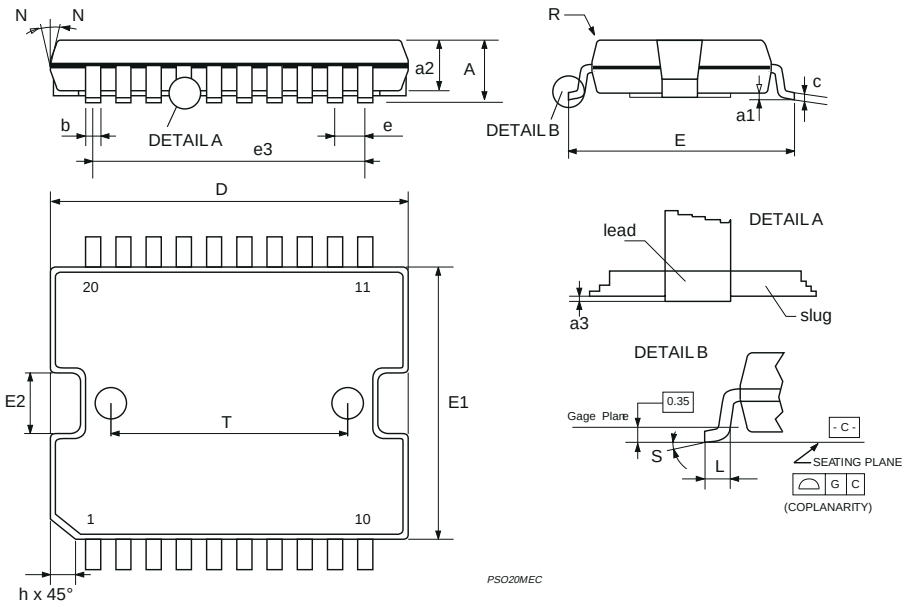

Information furnished is believed to be accurate and reliable. However, SGS-THOMSON Microelectronics assumes no responsibility for the consequences of use of such information nor for any infringement of patents or other rights of third parties which may result from its use. No license is granted by implication or otherwise under any patent or patent rights of SGS-THOMSON Microelectronics. Specification mentioned in this publication are subject to change without notice. This publication supersedes and replaces all information previously supplied. SGS-THOMSON Microelectronics products are not authorized for use as critical components in life support devices or systems without express written approval of SGS-THOMSON Microelectronics.

© 1996 SGS-THOMSON Microelectronics – Printed in Italy – All Rights Reserved

SGS-THOMSON Microelectronics GROUP OF COMPANIES

Australia - Brazil - Canada - China - France - Germany - Hong Kong - Italy - Japan - Korea - Malaysia - Malta - Morocco - The Netherlands - Singapore - Spain - Sweden - Switzerland - Taiwan - Thailand - United Kingdom - U.S.A.

This datasheet has been download from:

www.datasheetcatalog.com

Datasheets for electronics components.

ENTEGRECİ

Bu belge www.entegreci.com üzerinden sunulmaktadır.

Elektronik komponent tedarikinde Entegreci

Entegreci, Eskişehir merkezli, Türkiye geneline satış yapan bir elektronik komponent mağazasıdır. Entegreler (IC), mikrodenetleyiciler, transistörler, diyotlar, pasif elemanlar, konnektörler, modüller ve geliştirme kartları tek adetten seri üretim adetlerine kadar satılır. Ürün sayfalarında güncel stok durumunu, fiyatı ve datasheet bağlantısını bulabilirsiniz.

Parça koduyla arama

Üretici parça numarasını yazın; stok ve fiyatı hemen görün.

www.entegreci.com

Ürün kategorileri

Entegreden kapasitöre tüm elektronik komponent kategorileri.

Kategorilere göz atın

Üreticiler

Aradığınız üreticinin ürünlerini tek sayfada inceleyin.

Üreticileri görün

Toplu alım ve teklif

Listede olmayan ya da yüksek adetli parçalar için teklif isteyin.

Teklif isteyin

www.entegreci.com | **destek@entegreci.com** | **0850 305 90 34**

Entegreci is an online electronic components store based in Türkiye. Search by manufacturer part number to see stock, prices and datasheets for integrated circuits, microcontrollers, transistors, passive components and connectors, or request a quote for parts that are not listed.

Bu sayfa Entegreci tarafından eklenmiştir. Belgenin önceki sayfaları asıl yayıncısına aittir ve içeriği değiştirilmemiştir; en güncel sürüm için belgenin yayıncısına başvurun.