THREE TERMINAL NEGATIVE VOLTAGE REGULATORS
-5V, -6V, -7V, -8V, -12V, -15V, -18V, -20V, -24V.

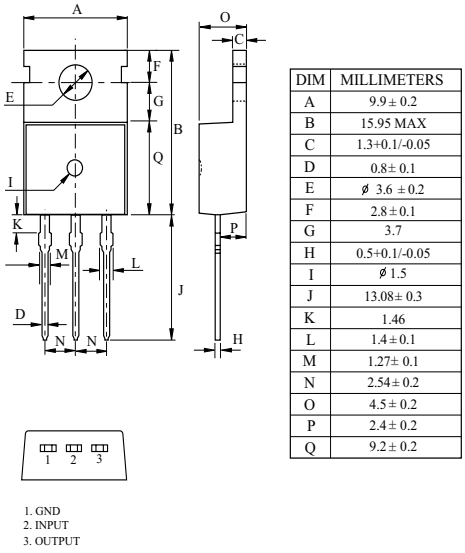

DIM	MILLIMETERS
A	9.9 ± 0.2
B	15.95 MAX
C	1.3+0.1/-0.05
D	0.8± 0.1
E	ø 3.6 ± 0.2
F	2.8 ± 0.1
G	3.7
H	0.5+0.1/-0.05
I	ø 1.5
J	13.08± 0.3
K	1.46
L	1.4 ± 0.1
M	1.27± 0.1
N	2.54± 0.2
O	4.5 ± 0.2
P	2.4 ± 0.2
Q	9.2 ± 0.2

TO-220AB

FEATURES

- Suitable for C-MOS, TTL, and the other digital IC power supply.
- Internal thermal overload protecting.
- Output Current up to 1.5A.
- Internal short circuit current limiting.
- Package is TO-220AB

LINE-UP

ITEM	OUTPUT VOLTAGE (Typ.)	UNIT
KIA7905P	-5	V
KIA7906P	-6	
KIA7907P	-7	
KIA7908P	-8	
KIA7909P	-9	
KIA7910P	-10	
KIA7912P	-12	
KIA7915P	-15	
KIA7918P	-18	
KIA7920P	-20	
KIA7924P	-24	

MAXIMUM RATINGS (Ta=25℃)

CHARACTERISTIC		SYMBOL	RATING	UNIT
Input Voltage	KIA7905P ~ KIA7915P	V_{IN}	-35	V
	KIA7918P ~ KIA7924P		-40	
Power Dissipation-1 (No Heatsink)		P_{D1}	1.9	W
Power Dissipation-2 (Infinite Heatsink)		P_{D2}	30	W
Operating Junction Temperature		T_j	-40 ~150	℃
Storage Temperature		T_{stg}	-55 ~150	℃
Maximum Junction Tamperature		$T_{j(max)}$	150	℃

EQUIVALENT CIRCUIT

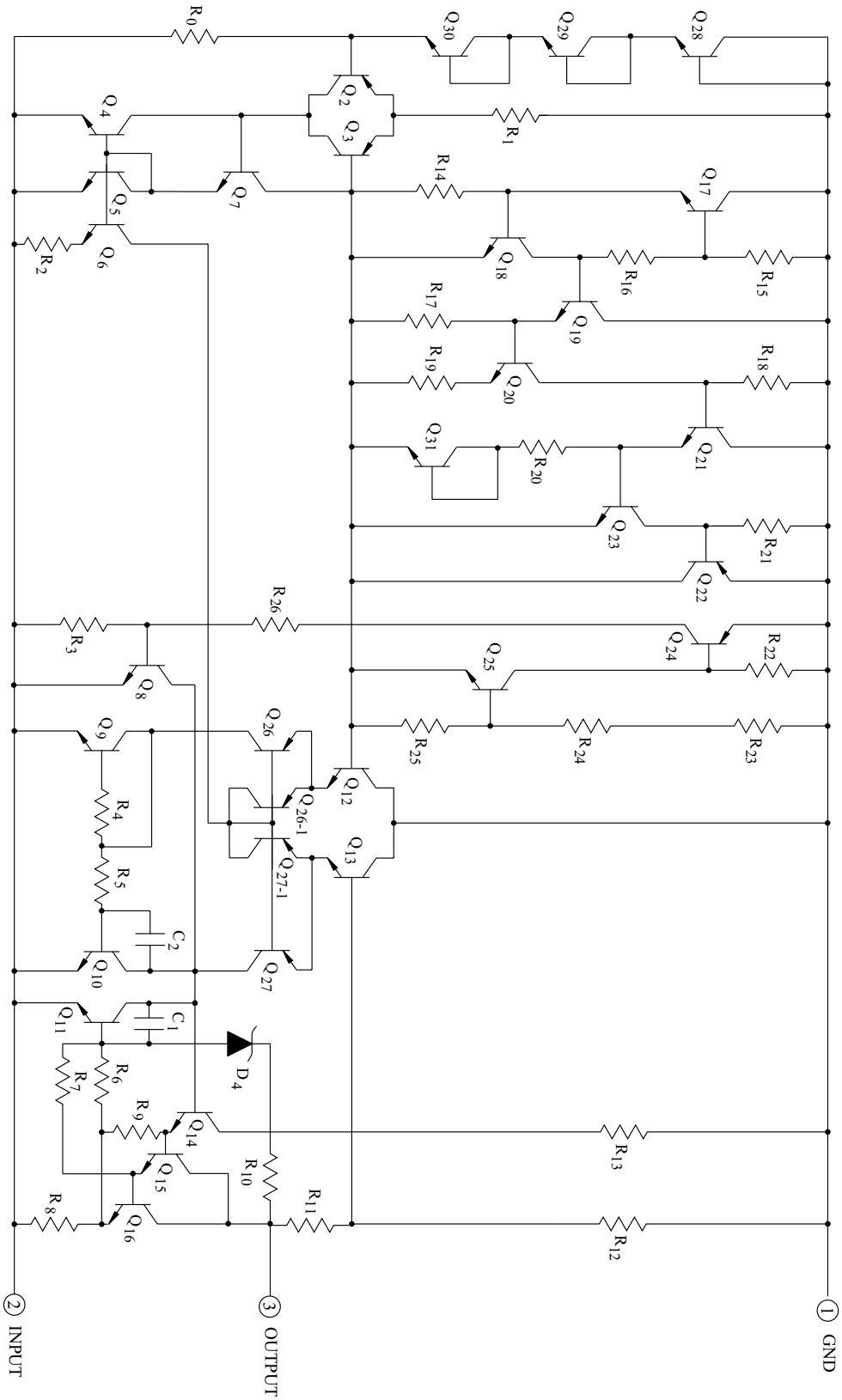

ELECTRICAL CHARACTERISTICS

KIA7905P

(Unless otherwise specified, V_{IN}=-10V, I_{OUT}=500mA, 0℃≦T_j≦125℃, C_{IN}=2.2μF, C_{OUT}=1μF)

CHARACTERISTIC	SYMBOL	TEST CIRCUIT	TEST CONDITION		MIN.	TYP.	MAX.	UNIT
Output Voltage	V_{OUT}	Fig.1	T_j=25℃		-5.2	-5.0	-4.8	V
Input Regulation	Reg line	Fig.1	T_j=25℃	-12V≦V_{IN}≦-8V	-	5	50	mV
				-25V≦V_{IN}≦-7V	-	10	100	
Load Regulation	Reg load	Fig.1	T_j=25℃	5mA≦I_{OUT}≦1.5A	-	10	100	mV
				250mA≦I_{OUT}≦750mA	-	3	50	
Output Voltage	V_{OUT}	Fig.1	-20V≦V_{IN}≦-7V 5mA≦I_{OUT}≦1.0A		-5.25	-5.0	-4.75	V
Quiescent Current	I_B	Fig.1	T_j=25℃		-	3	6	mA
Quiescent Current Change	ΔI_{BI}	Fig.1	-25V≦V_{IN}≦-8V		-	0.1	1.3	mA
	ΔI_{BO}		5mA≦I_{OUT}≦1.0A		-	0.05	0.5	
Output Noise Voltage	V_{NO}	Fig.2	Ta=25℃, 10Hz≦f≦100kHz		-	100	-	μV_{rms}
Ripple Rejection Ratio	RR	Fig.3	f=120Hz, I_{OUT}=20mA,		54	60	-	dB
Short Circuit Current Limit	I_{SC}	Fig.1	T_j=25℃		-	1.9	-	A
Average Temperature Coefficient of Output Voltage	T_{CVO}	Fig.1	I_{OUT}=5.0mA		-	-0.4	-	mV/℃
Dropout Voltage	V_D	Fig.1	T_j=25℃, I_{OUT}=1A		-	2.0	-	V

ELECTRICAL CHARACTERISTICS

KIA7906P

(Unless otherwise specified, V_{IN}=-11V, I_{OUT}=500mA, 0℃ ≤ T_j ≤ 125℃, C_{IN}=2.2μF, C_{OUT}=1μF)

CHARACTERISTIC		SYMBOL	TEST CIRCUIT	TEST CONDITION		MIN.	TYP.	MAX.	UNIT
Output Voltage		V_{OUT}	Fig.1	T_j=25℃		-6.25	-6.0	-5.75	V
Input Regulation		Reg line	Fig.1	T_j=25℃	-13V ≤ V_{IN} ≤ -9V	-	5	60	mV
					-25V ≤ V_{IN} ≤ -8V	-	10	120	
Load Regulation		Reg load	Fig.1	T_j=25℃	5mA ≤ I_{OUT} ≤ 1.5A	-	10	120	mV
					250mA ≤ I_{OUT} ≤ 750mA	-	3	60	
Output Voltage		V_{OUT}	Fig.1	-21V ≤ V_{IN} ≤ -9V 5mA ≤ I_{OUT} ≤ 1.0A		-6.3	-6.0	-5.7	V
Quiescent Current		I_B	Fig.1	T_j=25℃		-	3	6	mA
Quiescent Current Change	Line	ΔI_{BI}	Fig.1	-25V ≤ V_{IN} ≤ -9V		-	-	1.3	mA
	Load	ΔI_{BO}		5mA ≤ I_{OUT} ≤ 1.0A		-	-	0.5	
Output Noise Voltage		V_{NO}	Fig.2	Ta=25℃, 10Hz ≤ f ≤ 100kHz		-	130	-	μV_{rms}
Ripple Rejection Ratio		RR	Fig.3	f=120Hz, I_{OUT}=20mA,		54	60	-	dB
Short Circuit Current Limit		I_{SC}	Fig.1	T_j=25℃		-	1.9	-	A
Average Temperature Coefficient of Output Voltage		T_{CVO}	Fig.1	I_{OUT}=5mA		-	-0.5	-	mV/℃
Dropout Voltage		V_D	Fig.1	T_j=25℃, I_{OUT}=1A		-	2.0	-	V

ELECTRICAL CHARACTERISTICS

KIA7907P

(Unless otherwise specified, V_{IN}=-12V, I_{OUT}=500mA, 0℃ ≦T_j≦125℃, C_{IN}=2.2㎌, C_{OUT}=1㎌)

CHARACTERISTIC		SYMBOL	TEST CIRCUIT	TEST CONDITION		MIN.	TYP.	MAX.	UNIT
Output Voltage		V_{OUT}	Fig.1	T_j=25℃		-7.28	-7.0	-6.72	V
Input Regulation		Reg line	Fig.1	T_j=25℃	-15V ≦V_{IN} ≦-10V	-	10	70	mV
					-25V ≦V_{IN} ≦-9V	-	45	140	
Load Regulation		Reg load	Fig.1	T_j=25℃	5mA ≦I_{OUT} ≦1.5A	-	20	140	mV
					250mA ≦I_{OUT} ≦750mA	-	7	70	
Output Voltage		V_{OUT}	Fig.1	-22V ≦V_{IN} ≦-9V 5mA ≦I_{OUT} ≦1.0A		-7.35	-	-6.65	V
Quiescent Current		I_B	Fig.1	T_j=25℃		-	4.3	8.0	mA
Quiescent Current Change	Line	⊿I_{BI}	Fig.1	-25V ≦V_{IN} ≦-9V		-	-	1.0	mA
	Load	⊿I_{BO}		5mA ≦I_{OUT} ≦1.0A		-	-	0.5	
Output Noise Voltage		V_{NO}	Fig.2	Ta=25℃, 10Hz≦f≦100kHz		-	49	-	㎌V_{rms}
Ripple Rejection Ratio		RR	Fig.3	f=120Hz, I_{OUT}=20mA,		60	67	-	dB
Short Circuit Current Limit		I_{SC}	Fig.1	T_j=25℃		-	1.9	-	A
Average Temperature Coefficient of Output Voltage		T_{CVO}	Fig.1	I_{OUT}=5mA		-	0.9	-	mV/℃
Dropout Voltage		V_D	Fig.1	T_j=25℃, I_{OUT}=1A		-	2.0	-	V

ELECTRICAL CHARACTERISTICS

KIA7908P

(Unless otherwise specified, V_{IN}=-14V, I_{OUT}=500mA, 0℃ ≦ T_j ≦ 125℃, C_{IN}=2.2㎌, C_{OUT}=1㎌)

CHARACTERISTIC		SYMBOL	TEST CIRCUIT	TEST CONDITION		MIN.	TYP.	MAX.	UNIT
Output Voltage		V_{OUT}	Fig.1	T_j=25℃		-8.3	-8.0	-7.7	V
Input Regulation		Reg line	Fig.1	T_j=25℃	-17V ≦ V_{IN} ≦ -11V	-	5	80	mV
					-25V ≦ V_{IN} ≦ -10.5V	-	10	100	
Load Regulation		Reg load	Fig.1	T_j=25℃	5mA ≦ I_{OUT} ≦ 1.5A	-	12	160	mV
					250mA ≦ I_{OUT} ≦ 750mA	-	4	80	
Output Voltage		V_{OUT}	Fig.1	-23V ≦ V_{IN} ≦ -11.5V 5mA ≦ I_{OUT} ≦ 1.0A		-8.4	-8.0	-7.6	V
Quiescent Current		I_B	Fig.1	T_j=25℃		-	3	6	mA
Quiescent Current Change	Line	ΔI_{BI}	Fig.1	-25V ≦ V_{IN} ≦ -11.5V		-	0.1	1.0	mA
	Load	ΔI_{BO}		5mA ≦ I_{OUT} ≦ 1.0A		-	0.05	0.5	
Output Noise Voltage		V_{NO}	Fig.2	Ta=25℃, 10Hz ≦ f ≦ 100kHz		-	175	-	μV_{rms}
Ripple Rejection Ratio		RR	Fig.3	f=120Hz, I_{OUT}=20mA,		54	60	-	dB
Short Circuit Current Limit		I_{SC}	Fig.1	T_j=25℃		-	1.9	-	A
Average Temperature Coefficient of Output Voltage		T_{CVO}	Fig.1	I_{OUT}=5mA		-	-0.6	-	mV/℃
Dropout Voltage		V_D	Fig.1	T_j=25℃, I_{OUT}=1A		-	2.0	-	V

ELECTRICAL CHARACTERISTICS

KIA7909P

(Unless otherwise specified, V_{IN}=-15V, I_{OUT}=500mA, 0℃ ≦T_j≦125℃, C_{IN}=2.2μF, C_{OUT}=1μF)

CHARACTERISTIC		SYMBOL	TEST CIRCUIT	TEST CONDITION		MIN.	TYP.	MAX.	UNIT
Output Voltage		V_{OUT}	Fig.1	T_j=25℃		-9.3	-9.0	-8.7	V
Input Regulation		Reg line	Fig.1	T_j=25℃	-19V ≦V_{IN} ≦-13V	-	5	90	mV
					-26V ≦V_{IN} ≦-11.5V	-	10	100	
Load Regulation		Reg load	Fig.1	T_j=25℃	5mA ≦I_{OUT} ≦1.5A	-	10	150	mV
					250mA ≦I_{OUT} ≦750mA	-	5	120	
Output Voltage		V_{OUT}	Fig.1	-24V ≦V_{IN} ≦-11.5V 5mA ≦I_{OUT} ≦1.0A		-9.4	-9.0	-8.6	V
Quiescent Current		I_B	Fig.1	T_j=25℃		-	3	6	mA
Quiescent Current Change	Line	ΔI_{BI}	Fig.1	-26.5V ≦V_{IN} ≦-13V		-	0.1	1.0	mA
	Load	ΔI_{BO}		5mA ≦I_{OUT} ≦1.0A		-	0.05	0.5	
Output Noise Voltage		V_{NO}	Fig.2	Ta=25℃, 10Hz≦f≦100kHz		-	180	-	μV_{rms}
Ripple Rejection Ratio		RR	Fig.3	f=120Hz, I_{OUT}=20mA,		54	60	-	dB
Short Circuit Current Limit		I_{SC}	Fig.1	T_j=25℃		-	1.9	-	A
Average Temperature Coefficient of Output Voltage		T_{CVO}	Fig.1	I_{OUT}=5mA		-	-0.7	-	mV/℃
Dropout Voltage		V_D	Fig.1	T_j=25℃, I_{OUT}=1A		-	2.0	-	V

ELECTRICAL CHARACTERISTICS

KIA7910P

(Unless otherwise specified, V_{IN}=-16V, I_{OUT}=500mA, 0℃ ≤ T_j ≤ 125℃, C_{IN}=2.2μF, C_{OUT}=1μF)

CHARACTERISTIC		SYMBOL	TEST CIRCUIT	TEST CONDITION		MIN.	TYP.	MAX.	UNIT
Output Voltage		V_{OUT}	Fig.1	T_j=25℃		-10.4	-10	-9.6	V
Input Regulation		Reg line	Fig.1	T_j=25℃	-20V ≤ V_{IN} ≤ -14V	-	5	100	mV
					-27V ≤ V_{IN} ≤ -12.5V	-	10	110	
Load Regulation		Reg load	Fig.1	T_j=25℃	5mA ≤ I_{OUT} ≤ 1.5A	-	10	180	mV
					250mA ≤ I_{OUT} ≤ 750mA	-	6	120	
Output Voltage		V_{OUT}	Fig.1	-25V ≤ V_{IN} ≤ -12.5V 5mA ≤ I_{OUT} ≤ 1.0A		-10.5	-10	-9.5	V
Quiescent Current		I_B	Fig.1	T_j=25℃		-	3	6	mA
Quiescent Current Change	Line	ΔI_{BI}	Fig.1	-27.5V ≤ V_{IN} ≤ -14V		-	0.1	1.0	mA
	Load	ΔI_{BO}		5mA ≤ I_{OUT} ≤ 1.0A		-	0.05	0.5	
Output Noise Voltage		V_{NO}	Fig.2	Ta=25℃, 10Hz ≤ f ≤ 100kHz		-	190	-	μV_{rms}
Ripple Rejection Ratio		RR	Fig.3	f=120Hz, I_{OUT}=20mA		54	60	-	dB
Short Circuit Current Limit		I_{SC}	Fig.1	T_j=25℃		-	1.9	-	A
Average Temperature Coefficient of Output Voltage		T_{CVO}	Fig.1	I_{OUT}=5mA		-	-0.7	-	mV/℃
Dropout Voltage		V_D	Fig.1	T_j=25℃, I_{OUT}=1A		-	2.0	-	V

ELECTRICAL CHARACTERISTICS

KIA7912P

(Unless otherwise specified, V_{IN}=-18V, I_{OUT}=500mA, 0℃ ≦T_j≦125℃, C_{IN}=2.2μF, C_{OUT}=1μF)

CHARACTERISTIC		SYMBOL	TEST CIRCUIT	TEST CONDITION		MIN.	TYP.	MAX.	UNIT
Output Voltage		V_{OUT}	Fig.1	T_j=25℃		-12.5	-12	-11.5	V
Input Regulation		Reg line	Fig.1	T_j=25℃	-22V ≦V_{IN} ≦-16V	-	6	120	mV
					-30V ≦V_{IN} ≦-14.5V	-	12	240	
Load Regulation		Reg load	Fig.1	T_j=25℃	5mA ≦I_{OUT} ≦1.5A	-	12	240	mV
					250mA ≦I_{OUT} ≦750mA	-	4	120	
Output Voltage		V_{OUT}	Fig.1	-27V ≦V_{IN} ≦-15.5V 5mA ≦I_{OUT} ≦1.0A		-12.6	-12	-11.4	V
Quiescent Current		I_B	Fig.1	T_j=25℃		-	3	6	mA
Quiescent Current Change	Line	ΔI_{BI}	Fig.1	-30V ≦V_{IN} ≦-15V		-	0.1	1.0	mA
	Load	ΔI_{BO}		5mA ≦I_{OUT} ≦1.0A		-	0.05	0.5	
Output Noise Voltage		V_{NO}	Fig.2	Ta=25℃, 10Hz ≦f≦100kHz		-	200	-	μV_{rms}
Ripple Rejection Ratio		RR	Fig.3	f=120Hz, I_{OUT}=20mA,		54	60	-	dB
Short Circuit Current Limit		I_{SC}	Fig.1	T_j=25℃		-	1.9	-	A
Average Temperature Coefficient of Output Voltage		T_{CVO}	Fig.1	I_{OUT}=5mA		-	-0.8	-	mV/℃
Dropout Voltage		V_D	Fig.1	T_j=25℃, I_{OUT}=1A		-	2.0	-	V

ELECTRICAL CHARACTERISTICS

KIA7915P

(Unless otherwise specified, V_{IN}=-23V, I_{OUT}=500mA, 0℃ ≤ T_j ≤ 125℃, C_{IN}=2.2μF, C_{OUT}=1μF)

CHARACTERISTIC		SYMBOL	TEST CIRCUIT	TEST CONDITION		MIN.	TYP.	MAX.	UNIT
Output Voltage		V_{OUT}	Fig.1	T_j=25℃		-15.6	-15	-14.4	V
Input Regulation		Reg line	Fig.1	T_j=25℃	-26V ≤ V_{IN} ≤ -20V	-	6	150	mV
					-30V ≤ V_{IN} ≤ -17.5V	-	12	300	
Load Regulation		Reg load	Fig.1	T_j=25℃	5mA ≤ I_{OUT} ≤ 1.5A	-	12	300	mV
					250mA ≤ I_{OUT} ≤ 750mA	-	4	150	
Output Voltage		V_{OUT}	Fig.1	-30V ≤ V_{IN} ≤ -18V 5mA ≤ I_{OUT} ≤ 1.0A		-15.75	-15	-14.25	V
Quiescent Current		I_B	Fig.1	T_j=25℃		-	3	6	mA
Quiescent Current Change	Line	ΔI_{BI}	Fig.1	-30V ≤ V_{IN} ≤ -17.5V		-	0.1	1.0	mA
	Load	ΔI_{BO}		5mA ≤ I_{OUT} ≤ 1.0A		-	0.05	0.5	
Output Noise Voltage		V_{NO}	Fig.2	Ta=25℃, 10Hz ≤ f ≤ 100kHz		-	250	-	μV_{rms}
Ripple Rejection Ratio		RR	Fig.3	f=120Hz, I_{OUT}=20mA,		54	60	-	dB
Short Circuit Current Limit		I_{SC}	Fig.1	T_j=25℃		-	1.9	-	A
Average Temperature Coefficient of Output Voltage		T_{CVO}	Fig.1	I_{OUT}=5mA		-	-0.9	-	mV/℃
Dropout Voltage		V_D	Fig.1	T_j=25℃, I_{OUT}=1A		-	2.0	-	V

ELECTRICAL CHARACTERISTICS

KIA7918P

(Unless otherwise specified, V_{IN}=-27V, I_{OUT}=500mA, 0℃ ≦T_j≦125℃, C_{IN}=2.2μF, C_{OUT}=1μF)

CHARACTERISTIC		SYMBOL	TEST CIRCUIT	TEST CONDITION		MIN.	TYP.	MAX.	UNIT
Output Voltage		V_{OUT}	Fig.1	T_j=25℃		-18.7	-18	-17.3	V
Input Regulation		Reg line	Fig.1	T_j=25℃	-30V ≦V_{IN} ≦-24V	-	8	180	mV
					-33V ≦V_{IN} ≦-21V	-	15	360	
Load Regulation		Reg load	Fig.1	T_j=25℃	5mA ≦I_{OUT} ≦1.5A	-	15	360	mV
					250mA ≦I_{OUT} ≦750mA	-	5	180	
Output Voltage		V_{OUT}	Fig.1	-33V ≦V_{IN} ≦-22.5V 5mA ≦I_{OUT} ≦1.0A		-18.85	-18	-17.15	V
Quiescent Current		I_B	Fig.1	T_j=25℃		-	3	6	mA
Quiescent Current Change	Line	ΔI_{BI}	Fig.1	-33V ≦V_{IN} ≦-22V		-	-	1.0	mA
	Load	ΔI_{BO}		5mA ≦I_{OUT} ≦1.0A		-	-	0.5	
Output Noise Voltage		V_{NO}	Fig.2	Ta=25℃, 10Hz≦f≦100kHz		-	300	-	μV_{rms}
Ripple Rejection Ratio		RR	Fig.3	f=120Hz, I_{OUT}=20mA,		54	60	-	dB
Short Circuit Current Limit		I_{SC}	Fig.1	T_j=25℃		-	1.9	-	A
Average Temperature Coefficient of Output Voltage		T_{CVO}	Fig.1	I_{OUT}=5mA		-	-1.0	-	mV/℃
Dropout Voltage		V_D	Fig.1	T_j=25℃, I_{OUT}=1A		-	2.0	-	V

ELECTRICAL CHARACTERISTICS

KIA7920P

(Unless otherwise specified, V_{IN}=-30V, I_{OUT}=500mA, 0℃ ≦ T_j ≦ 125℃, C_{IN}=2.2㎌, C_{OUT}=1㎌)

CHARACTERISTIC		SYMBOL	TEST CIRCUIT	TEST CONDITION		MIN.	TYP.	MAX.	UNIT
Output Voltage		V_{OUT}	Fig.1	T_j=25℃		-20.8	-20	-19.2	V
Input Regulation		Reg line	Fig.1	T_j=25℃	-32V ≦ V_{IN} ≦ -26V	-	10	180	mV
					-35V ≦ V_{IN} ≦ -24V	-	18	360	
Load Regulation		Reg load	Fig.1	T_j=25℃	5mA ≦ I_{OUT} ≦ 1.5A	-	18	360	mV
					250mA ≦ I_{OUT} ≦ 750mA	-	10	180	
Output Voltage		V_{OUT}	Fig.1	-35V ≦ V_{IN} ≦ -24 5mA ≦ I_{OUT} ≦ 1.0A		-21.0	-20	-19.0	V
Quiescent Current		I_B	Fig.1	T_j=25℃		-	3	6	mA
Quiescent Current Change	Line	ΔI_{BI}	Fig.1	-36.5V ≦ V_{IN} ≦ -25V		-	-	1.0	mA
	Load	ΔI_{BO}		5mA ≦ I_{OUT} ≦ 1.0A		-	-	0.5	
Output Noise Voltage		V_{NO}	Fig.2	Ta=25℃, 10Hz ≦ f ≦ 100kHz		-	350	-	μV_{rms}
Ripple Rejection Ratio		RR	Fig.3	f=120Hz, I_{OUT}=20mA		54	60	-	dB
Short Circuit Current Limit		I_{SC}	Fig.1	T_j=25℃		-	1.9	-	A
Average Temperature Coefficient of Output Voltage		T_{CVO}	Fig.1	I_{OUT}=5mA		-	-1.0	-	mV/℃
Dropout Voltage		V_D	Fig.1	T_j=25℃, I_{OUT}=1A		-	2.0	-	V

ELECTRICAL CHARACTERISTICS

KIA7924P

(Unless otherwise specified, V_{IN}=-33V, I_{OUT}=500mA, 0℃≦T_j≦125℃, C_{IN}=0.33μF, C_{OUT}=0.1μF)

CHARACTERISTIC		SYMBOL	TEST CIRCUIT	TEST CONDITION		MIN.	TYP.	MAX.	UNIT
Output Voltage		V_{OUT}	Fig.1	T_j=25℃		-25	-24	-23	V
Input Regulation		Reg line	Fig.1	T_j=25℃	-36V≦V_{IN}≦-30V	-	8	240	mV
					-38V≦V_{IN}≦-27V	-	15	480	
Load Regulation		Reg load	Fig.1	T_j=25℃	5mA≦I_{OUT}≦1.5A	-	15	480	mV
					250mA≦I_{OUT}≦750mA	-	5	240	
Output Voltage		V_{OUT}	Fig.1	-38V≦V_{IN}≦-27V 5mA≦I_{OUT}≦1.0A		-25.2	-24	-22.5	V
Quiescent Current		I_B	Fig.1	T_j=25℃		-	3	6	mA
Quiescent Current Change	Line	ΔI_{BI}	Fig.1	-38V≦V_{IN}≦-27V		-	-	1.0	mA
	Load	ΔI_{BO}		5mA≦I_{OUT}≦1.0A		-	-	0.5	
Output Noise Voltage		V_{NO}	Fig.2	Ta=25℃, 10Hz≦f≦100kHz		-	400	-	μV_{rms}
Ripple Rejection Ratio		RR	Fig.3	f=120Hz, I_{OUT}=20mA,		54	60	-	dB
Short Circuit Current Limit		I_{SC}	Fig.1	T_j=25℃		-	1.9	-	A
Average Temperature Coefficient of Output Voltage		T_{CVO}	Fig.1	I_{OUT}=5mA		-	-1.0	-	mV/℃
Dropout Voltage		V_D	Fig.1	T_a=25℃, I_{OUT}=1A		-	2.0	-	V

TEST CIRCUIT

Fig.1 Standard Test Circuit

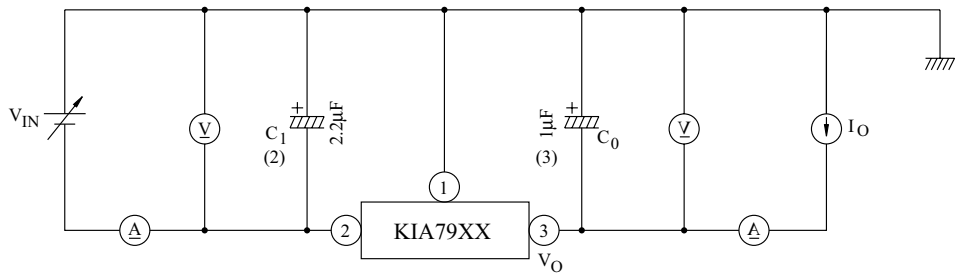

Notes : (1) To specify an output voltage, substitute voltage value for "XX"

(2) Required for stability. For value given, capacitor must be solid tantalum. If aluminum electrolitics are used, at least ten times value shown should be selected. C_I is required if regulator is located an appreciable distance from power supply filter.

(3) To improve transient response. If large capacitors are used, a high current diode from input to output (1N4001 or similar) should be introduced to protect the device from momentary iput short circuit.

Fig.2 V_{NO} Test Circuit

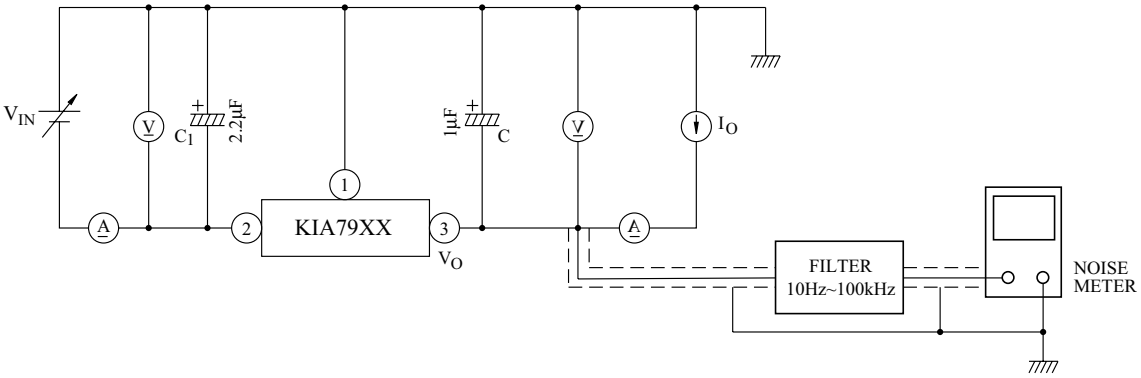

Fig.3 Ripple Rejection Test Circuit

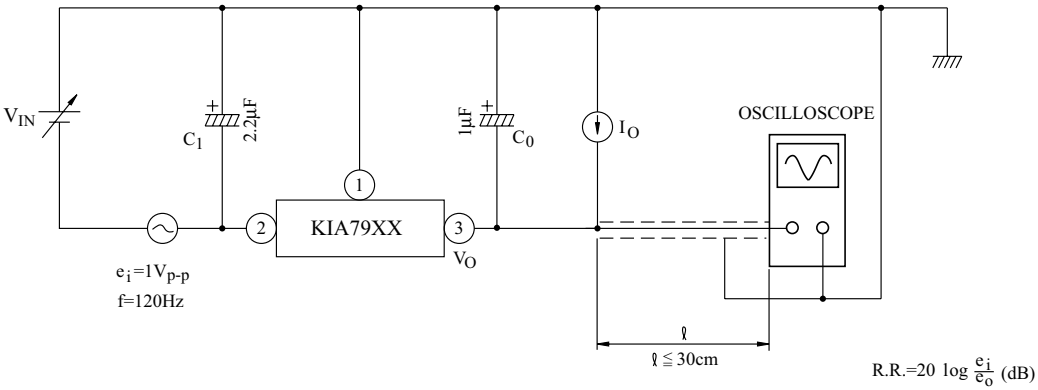

Fig. 4

I_B - T_j

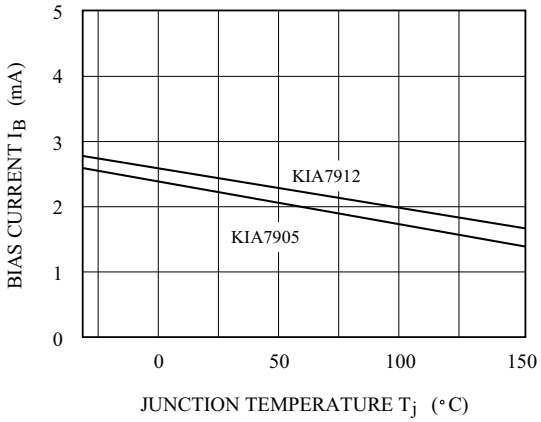

Fig. 5

V_{OUT} - T_j

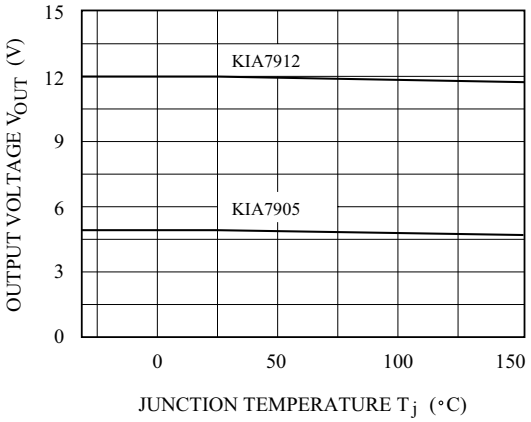

Fig. 6

RR - I_{OUT}

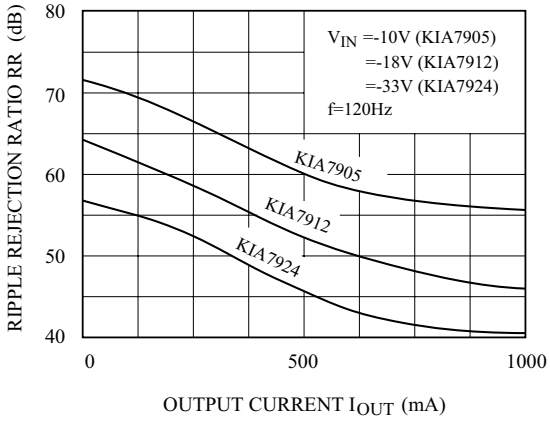

Fig. 7

I_{SC} - V_{IN}

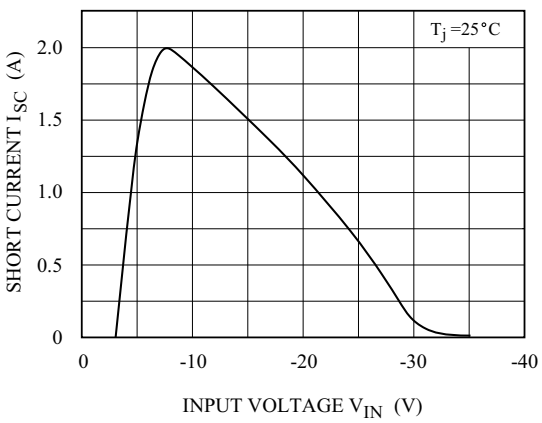

Fig. 8

V_D - T_j

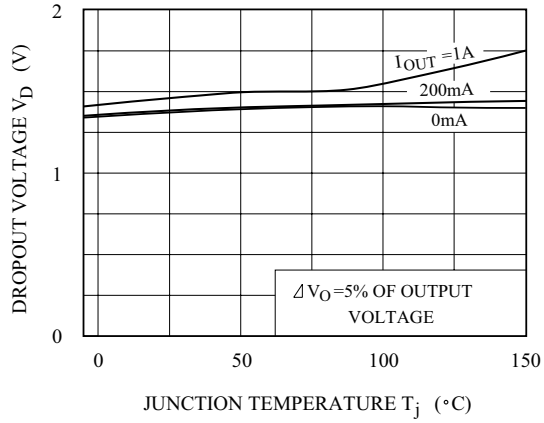

Fig. 9

P_D - Ta

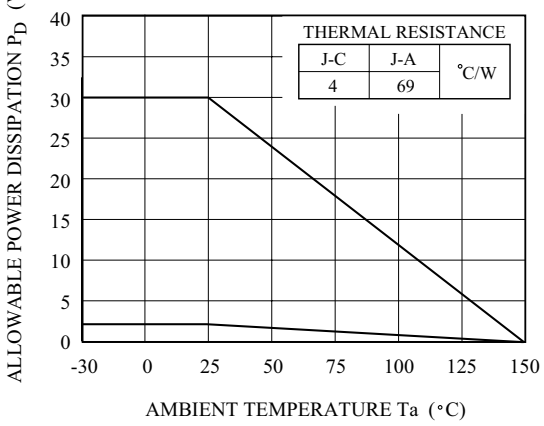

ENTEGRECİ

Bu belge www.entegreci.com üzerinden sunulmaktadır.

Elektronik komponent tedarikinde Entegreci

Entegreci, Eskişehir merkezli, Türkiye geneline satış yapan bir elektronik komponent mağazasıdır. Entegreler (IC), mikrodenetleyiciler, transistörler, diyotlar, pasif elemanlar, konnektörler, modüller ve geliştirme kartları tek adetten seri üretim adetlerine kadar satılır. Ürün sayfalarında güncel stok durumunu, fiyatı ve datasheet bağlantısını bulabilirsiniz.

Parça koduyla arama

Üretici parça numarasını yazın; stok ve fiyatı hemen görün.

www.entegreci.com

Ürün kategorileri

Entegreden kapasitöre tüm elektronik komponent kategorileri.

Kategorilere göz atın

Üreticiler

Aradığınız üreticinin ürünlerini tek sayfada inceleyin.

Üreticileri görün

Toplu alım ve teklif

Listede olmayan ya da yüksek adetli parçalar için teklif isteyin.

Teklif isteyin

www.entegreci.com | **destek@entegreci.com** | **0850 305 90 34**

Entegreci is an online electronic components store based in Türkiye. Search by manufacturer part number to see stock, prices and datasheets for integrated circuits, microcontrollers, transistors, passive components and connectors, or request a quote for parts that are not listed.

Bu sayfa Entegreci tarafından eklenmiştir. Belgenin önceki sayfaları asıl yayıncısına aittir ve içeriği değiştirilmemiştir; en güncel sürüm için belgenin yayıncısına başvurun.