HARRIS SEMICONDUCTOR

ICL8211, ICL8212

April 1994

Programmable Voltage Detectors

Features

- **High Accuracy Voltage Sensing and Generation**
- **Internal Reference 1.15V Typical**
- **Low Sensitivity to Supply Voltage and Temperature Variations**
- **Wide Supply Voltage Range Typ. 1.8V to 30V**
- **Essentially Constant Supply Current Over Full Supply Voltage Range**
- **Easy to Set Hysteresis Voltage Range**
- **Defined Output Current Limit ICL8211**
- **High Output Current Capability ICL8212**

Applications

- **Low Voltage Sensor/Indicator**
- **High Voltage Sensor/Indicator**
- **Nonvolatile Out-of-Voltage Range Sensor/Indicator**
- **Programmable Voltage Reference or Zener Diode**
- **Series or Shunt Power Supply Regulator**
- **Fixed Value Constant Current Source**

Description

The Harris ICL8211/8212 are micropower bipolar monolithic integrated circuits intended primarily for precise voltage detection and generation. These circuits consist of an accurate voltage reference, a comparator and a pair of output buffer/drivers.

Specifically, the ICL8211 provides a 7mA current limited output sink when the voltage applied to the 'THRESHOLD' terminal is less than 1.15V (the internal reference). The ICL8212 requires a voltage in excess of 1.15V to switch its output on (no current limit). Both devices have a low current output (HYSTERESIS) which is switched on for input voltages in excess of 1.15V. The HYSTERESIS output may be used to provide positive and noise free output switching using a simple feedback network.

Ordering Information

PART NUMBER	TEMPERATURE RANGE	PACKAGE
ICL8211CPA	0^oC to $+70^oC$	8 Lead Plastic DIP
ICL8211CBA	0^oC to $+70^oC$	8 Lead SOIC (N)
ICL8211CTY	0^oC to $+70^oC$	8 Pin Metal Can
ICL8211MTY (Note 1)	-55^oC to $+125^oC$	8 Pin Metal Can
ICL8212CPA	0^oC to $+70^oC$	8 Lead Plastic DIP
ICL8212CBA	0^oC to $+70^oC$	8 Lead SOIC (N)
ICL8212CTY	0^oC to $+70^oC$	8 Pin Metal Can
ICL8212MTY (Note 1)	-55^oC to $+125^oC$	8 Pin Metal Can

NOTE:

1. Add /883B to part number if 883B processing is required

Pinouts

ICL8211 (PDIP, SOIC)
TOP VIEW

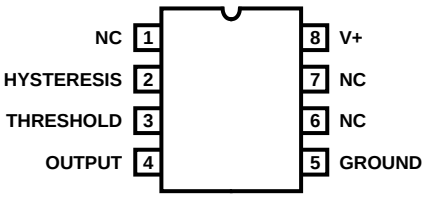

ICL8211 (CAN)
TOP VIEW

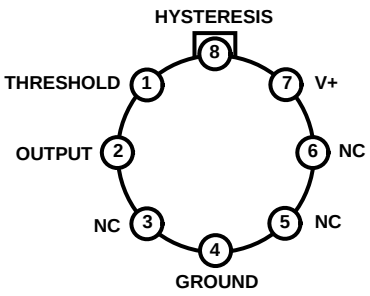

CAUTION: These devices are sensitive to electrostatic discharge. Users should follow proper I.C. Handling Procedures.
Copyright © Harris Corporation 1992

File Number **3184.1**

Functional Diagram

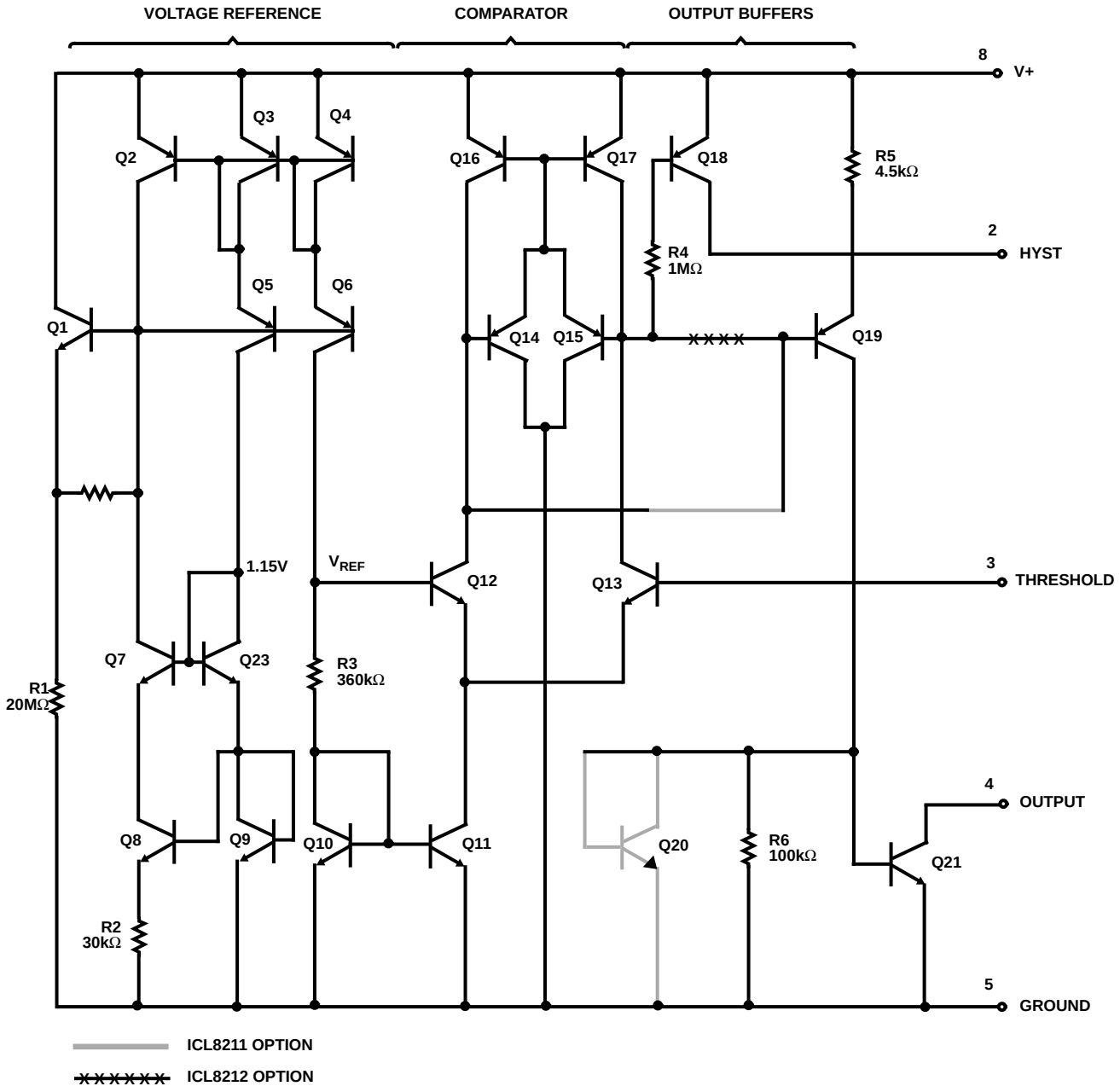

Absolute Maximum Ratings

Supply Voltage . . . . . -0.5V to +30V
Output Voltage . . . . . -0.5V to +30V
Hysteresis Voltage . . . . . +0.5V to -10V
Threshold Input Voltage . . . . . +30V to -5V with respect to GROUND and +0V to -30V with respect to V+
Current into Any Terminal . . . . . ± 30mA

Thermal Information

Thermal Resistance	θ_{JA}	θ_{JC}
Plastic DIP Package	150°C/W	-
Plastic SOIC Package	180°C/W	-
Metal Can	156°C/W	68°C/W

Lead Temperature (Soldering, 10s) . . . . . 300°C
(SOIC - Lead Tips Only)
Current into Any Terminal . . . . . ± 30mA

CAUTION: Stresses above those listed in "Absolute Maximum Ratings" may cause permanent damage to the device. This is a stress only rating and operation of the device at these or any other conditions above those indicated in the operational sections of this specification is not implied.

Operating Conditions

Operating Temperature Range
ICL8211M/8212M . . . . . -55°C to +125°C
ICL8211C/8212C . . . . . 0°C to +70°C

Storage Temperature Range . . . . . -65°C to +150°C

Electrical Specifications

V+ = 5V, T_A = +25°C Unless Otherwise Specified

PARAMETER	SYMBOL	TEST CONDITIONS		ICL8211 MIN	ICL8211 TYP	ICL8211 MAX	ICL8212 MIN	ICL8212 TYP	ICL8212 MAX	UNITS
Supply Current	I+	2.0 < V+ < 30	V_{TH} = 1.3V	10	22	40	50	110	250	µA
			V_{TH} = 0.9V	50	140	250	10	20	40	µA
Threshold Trip Voltage	V_{TH}	I_{OUT} = 4mA, V_{OUT} = 2V	V+ = 5V	0.98	1.15	1.19	1.00	1.15	1.19	V
			V+ = 2V	0.98	1.145	1.19	1.00	1.145	1.19	V
			V+ = 30V	1.00	1.165	1.20	1.05	1.165	1.20	V
Threshold Voltage Disparity Between Output & Hysteresis Output	V_{THP}	I_{OUT} = 4mA, I_{HYST} = 7mA, V_{OUT} = 2V, V_{HYST} = 3V		-	-0.8	-	-	-0.5	-	mV
Guaranteed Operating Supply Voltage Range	V_{SUPPLY}	+25°C (Note 3)		2.0	-	30	2.0	-	30	V
		0°C to +70°C (Note 3)		2.2	-	30	2.2	-	30	V
Minimum Operating Supply Voltage Range	V_{SUPPLY}	+25°C		-	1.8	-	-	1.8	-	V
		+125°C		-	1.4	-	-	1.4	-	V
		-55°C		-	1.5	-	-	2.5	-	V
Threshold Voltage Temperature Coefficient	$\Delta V_{TH}/\Delta T$	I_{OUT} = 4mA, V_{OUT} = 2V		-	± 200	-	-	± 200	-	ppm/°C
Variation of Threshold Voltage with Supply Voltage	$\Delta V_{TH}/\Delta V+$	ΔV+ = 10% at V+ = 5V		-	1.0	-	-	1.0	-	mV
Threshold Input Current	I_{TH}	V_{TH} = 1.15V		-	100	250	-	100	250	nA
		V_{TH} = 1.00V		-	5	-	-	5	-	nA
Output Leakage Current	I_{OLK}	V_{OUT} = 30V	V_{TH} = 0.9V	-	-	-	-	-	10	µA
			V_{TH} = 1.3V	-	-	10	-	-	-	µA
		V_{OUT} = 5V	V_{TH} = 0.9V	-	-	-	-	-	1	µA
			V_{TH} = 1.3V	-	-	1	-	-	-	µA
Output Saturation Voltage	V_{SAT}	I_{OUT} = 4mA	V_{TH} = 0.9V	-	0.17	0.4	-	-	-	V
			V_{TH} = 1.3V	-	-	-	-	0.17	0.4	V
Max Available Output Current	I_{OH}	(Notes 3 & 4), V_{OUT} = 5V	V_{TH} = 0.9V	4	7.0	12	-	-	-	mA
			V_{TH} = 1.3V	-	-	-	15	35	-	mA
Hysteresis Leakage Current	I_{LHYS}	V+ = 10V, V_{HYST} = GND	V_{TH} = 1.0V	-	-	0.1	-	-	0.1	µA

Electrical Specifications V+ = 5V, T_A = +25°C Unless Otherwise Specified **(Continued)**

PARAMETER	SYMBOL	TEST CONDITIONS		ICL8211			ICL8212			UNITS
				MIN	TYP	MAX	MIN	TYP	MAX	
Hysteresis Sat Voltage	$V_{HYS(MAX)}$	I_{HYST} = -7µA, measured with respect to V+	V_{TH} = 1.3V	-	-0.1	-0.2	-	-0.1	-0.2	V
Max Available Hysteresis Current	$I_{HYS\ (MAX)}$		V_{TH} = 1.3V	-15	-21	-	-15	-21	-	µA

Electrical Specifications ICL8211MTY/8212MTY V+ = 5V, T_A = -55°C to +125°C

PARAMETER	SYMBOL	TEST CONDITIONS		ICL8211			ICL8212			UNITS
				MIN	TYP	MAX	MIN	TYP	MAX	
Supply Current	I+	2.8 < V+ < 30		-	-	-	-	-	-	-
		V_T = 1.3V		-	-	100	-	350	350	µA
		V_T = 0.8V		-	-	350	-	100	100	µA
Threshold Trip Voltage	V_{TH}	I_{OUT} = 2mA V_{OUT} = 2V	V+ = 2.8V	0.80	-	1.30	0.80	-	1.30	V
			V+ = 30V	0.80	-	1.30	0.80	-	1.30	V
Guaranteed Operating Supply Voltage Range	V_{SUPPLY}	(Note 5)		2.8	-	30	2.8	-	30	V
Threshold Input Current	I_{TH}	V_{TH} = 1.15V		-	-	400	-	-	400	nA
Output Leakage Current	I_{OLK}	V_{OUT} = 30V	V_{TH} = 0.8V	-	-	-	-	-	20	µA
			V_{TH} = 1.3V	-	-	20	-	-	-	µA
Output Saturation Voltage	V_{SAT}	I_{OUT} = 3mA	V_{TH} = 0.8V	-	-	0.5	-	-	-	V
			V_{TH} = 1.3V	-	-	-	-	-	0.5	V
Max Available Output Current	I_{OH}	(Notes 3 & 4) V_{OUT} = 5V	V_{TH} = 0.8	3	-	15	-	-	-	mA
			V_{TH} = 1.3V	-	-	-	9	-	-	mA
Hysteresis Leakage Current	I_{LHYS}	V+ = 10V V_{HYST} = GND	V_{TH} = 0.8V	-	-	0.2	-	-	0.2	µA
Hysteresis Saturation Voltage	$V_{HYS(MAX)}$	I_{HYST} = -7µA measured with respect to V+	V_{TH} = 1.3V	-	-	0.3	-	-	0.3	V
Max Available Hysteresis Current	$I_{HYS\ (MAX)}$		V_{TH} = 1.3V	10	-	-	10	-	-	µA

NOTES:

1. The maximum output current of the ICL8211 is limited by design to 15mA under any operating conditions. The output voltage may be sustained at any voltage up to +30V as long as the maximum power dissipation of the device is not exceeded.
2. The maximum output current of the ICL8212 is not defined. And systems using the ICL8212 must therefore ensure that the output current does not exceed 30mA and that the maximum power dissipation of the device is not exceeded.
3. Threshold Trip Voltage is 0.80V(min) to 1.30V(mas). At I_{OUT} = 3mA.

Typical Performance Curves (ICL8211 and ICL8212)

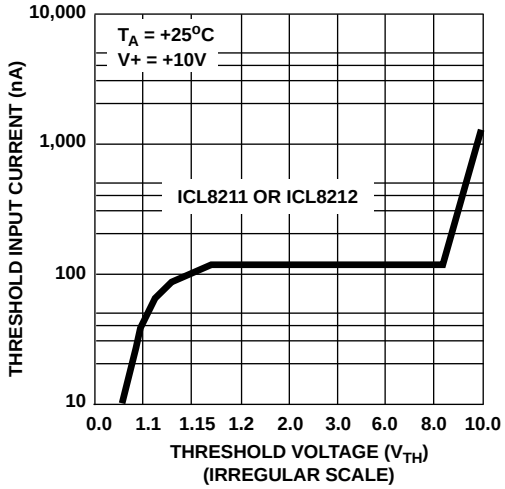

FIGURE 1. THRESHOLD INPUT CURRENT AS A FUNCTION OF THRESHOLD VOLTAGE

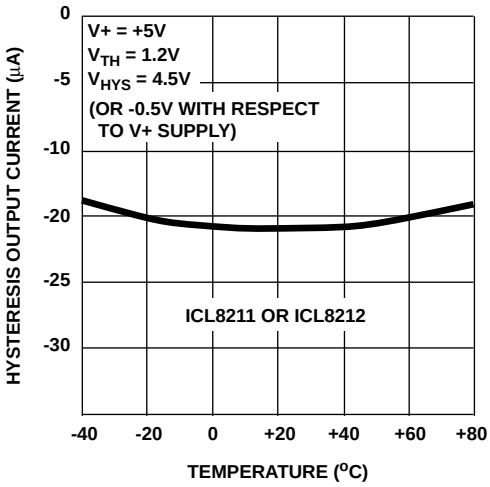

FIGURE 2. HYSTERESIS OUTPUT SATURATION CURRENT AS A FUNCTION OF TEMPERATURE

Typical Performance Curves (ICL8211 ONLY)

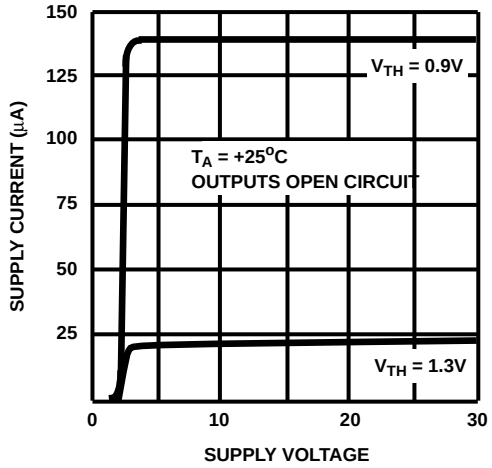

FIGURE 3. SUPPLY CURRENT AS A FUNCTION OF SUPPLY VOLTAGE

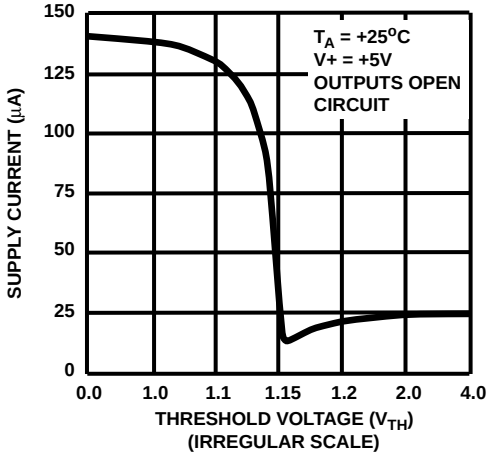

FIGURE 4. SUPPLY CURRENT AS A FUNCTION OF THRESHOLD VOLTAGE

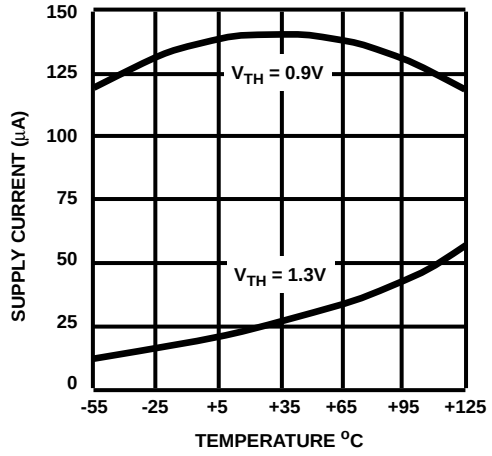

FIGURE 5. SUPPLY CURRENT AS A FUNCTION OF TEMPERATURE

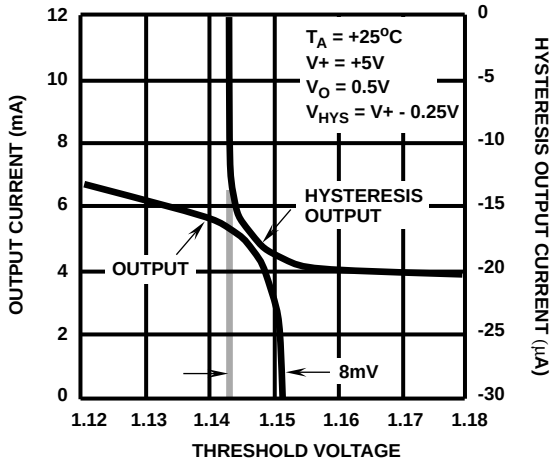

FIGURE 6. OUTPUT SATURATION CURRENTS AS A FUNCTION OF THRESHOLD VOLTAGE

Typical Performance Curves (ICL8211 ONLY) (Continued)

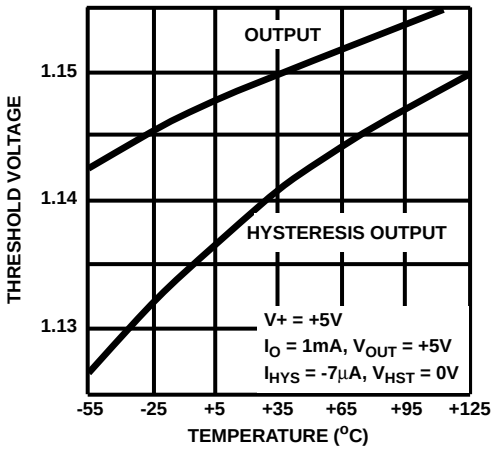

FIGURE 7. THRESHOLD VOLTAGE TO TURN OUTPUTS "JUST ON" AS A FUNCTION OF TEMPERATURE

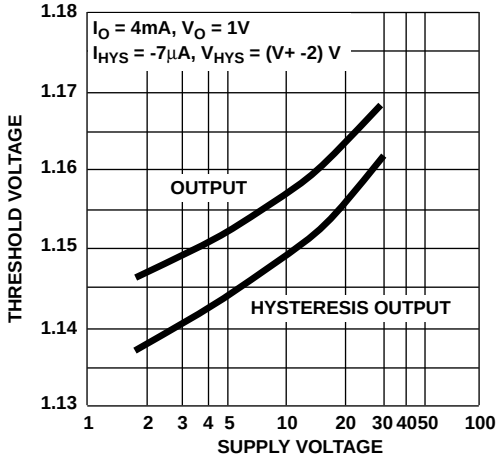

FIGURE 8. THRESHOLD VOLTAGE TO TURN OUTPUTS "JUST ON" AS A FUNCTION OF SUPPLY VOLTAGE

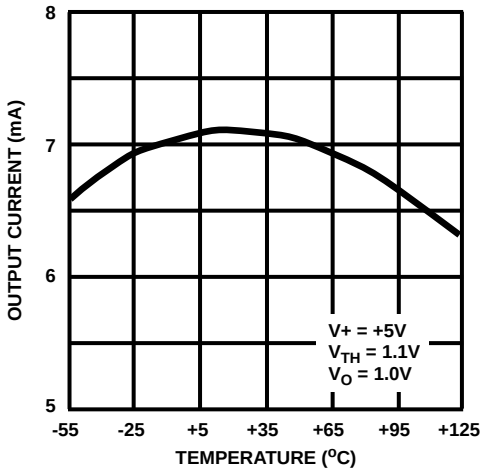

FIGURE 9. OUTPUT SATURATION CURRENT AS A FUNCTION OF TEMPERATURE

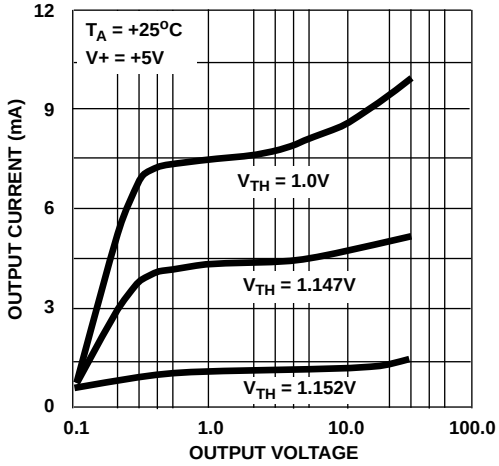

FIGURE 10. OUTPUT CURRENT AS A FUNCTION OF OUTPUT VOLTAGE

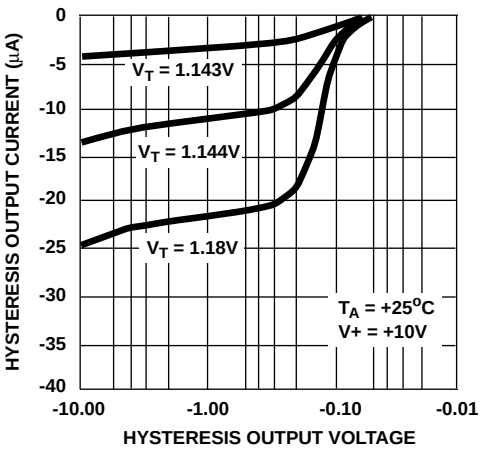

FIGURE 11. HYSTERESIS OUTPUT CURRENT AS A FUNCTION OF HYSTERESIS OUTPUT VOLTAGE

Typical Performance Curves (ICL8212 ONLY)

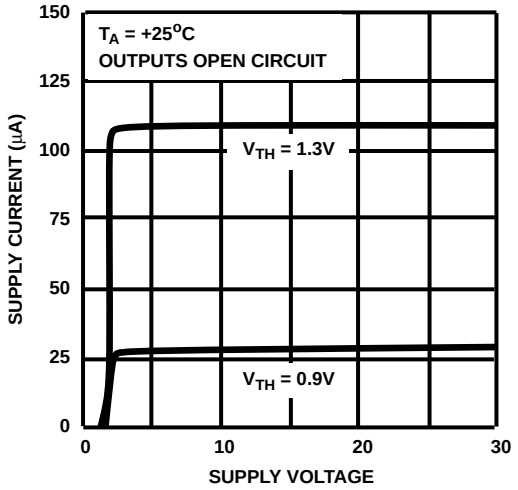

FIGURE 12. SUPPLY CURRENT AS A FUNCTION OF SUPPLY VOLTAGE

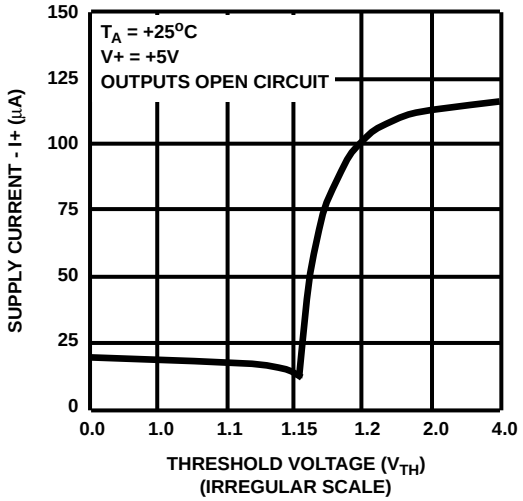

FIGURE 13. SUPPLY CURRENT AS A FUNCTION OF THRESHOLD VOLTAGE

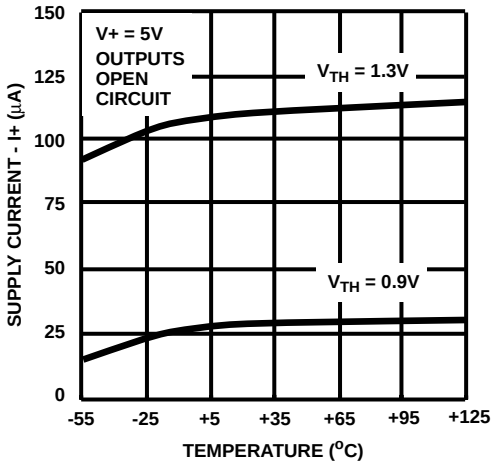

FIGURE 14. SUPPLY CURRENT AS A FUNCTION OF TEMPERATURE

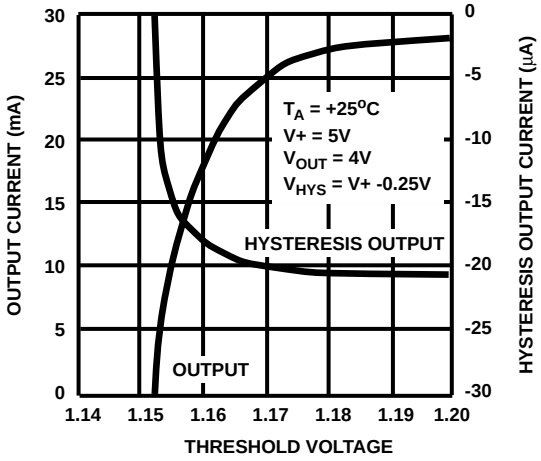

FIGURE 15. OUTPUT SATURATION CURRENTS AS A FUNCTION OF THRESHOLD VOLTAGE

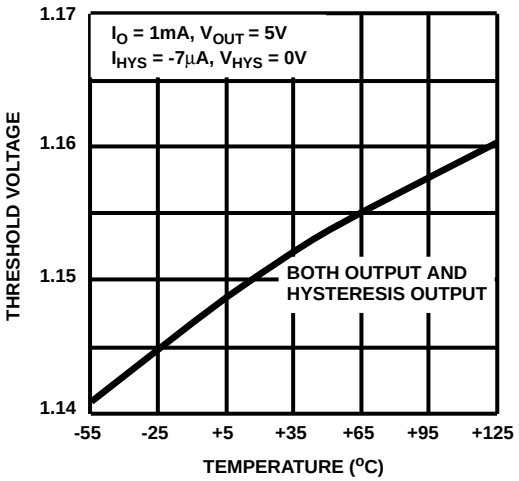

FIGURE 16. THRESHOLD VOLTAGE TO TURN OUTPUTS "JUST ON" AS A FUNCTION OF TEMPERATURE

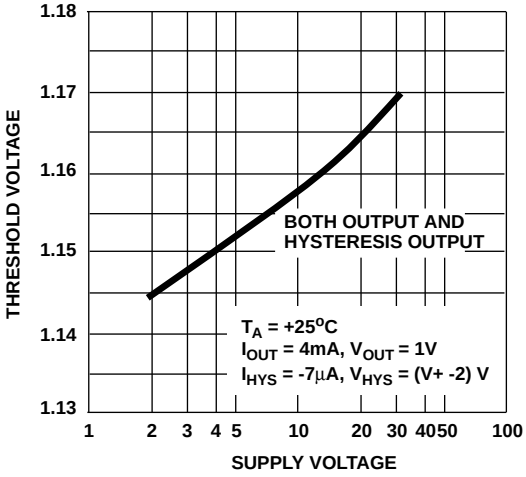

FIGURE 17. THRESHOLD VOLTAGE TO TURN OUTPUTS "JUST ON" AS A FUNCTION OF SUPPLY VOLTAGE

Typical Performance Curves

(ICL8212 ONLY) **(Continued)**

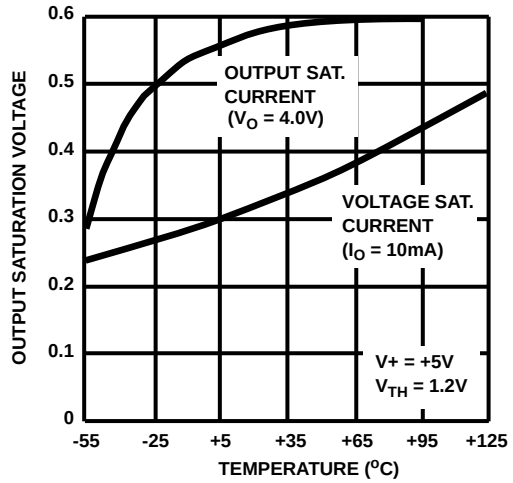

FIGURE 18. OUTPUT SATURATION VOLTAGE AND CURRENT AS A FUNCTION OF TEMPERATURE

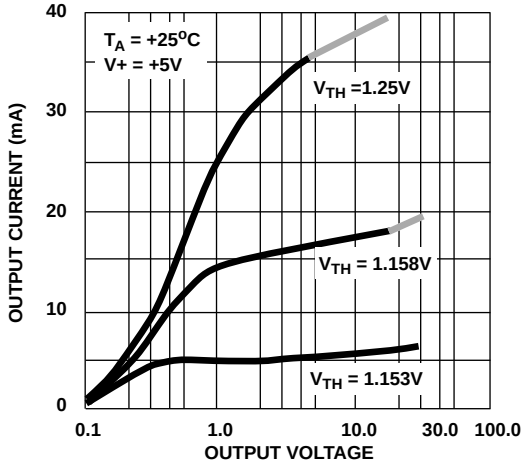

FIGURE 19. OUTPUT CURRENT AS A FUNCTION OF OUTPUT VOLTAGE

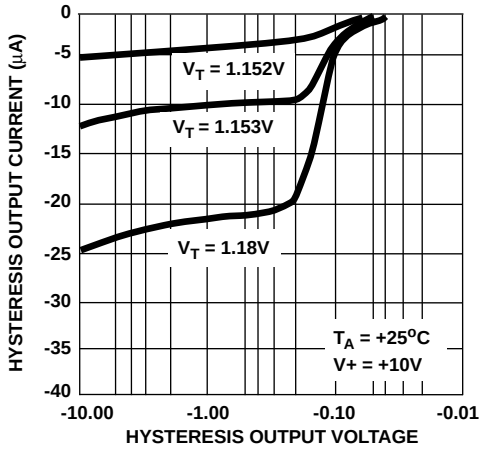

FIGURE 20. HYSTERESIS OUTPUT CURRENT AS A FUNCTION OF HYSTERESIS OUTPUT VOLTAGE

Detailed Description

The ICL8211 and ICL8212 use standard linear bipolar integrated circuit technology with high value thin film resistors which define extremely low value currents.

Components Q_1 through Q_{10} and R_1, R_2 and R_3 set up an accurate voltage reference of 1.15V. This reference voltage is close to the value of the bandgap voltage for silicon and is highly stable with respect to both temperature and supply voltage. The deviation from the bandgap voltage is necessary due to the negative temperature coefficient of the thin film resistors (-5000 ppm per ^{o}C).

Components Q_2 through Q_9 and R_2 make up a constant current source; Q_2 and Q_3 are identical and form a current mirror. Q_8 has 7 times the emitter area of Q_9, and due to the current mirror, the collector currents of Q_8 and Q_9 are forced to be equal and it can be shown that the collector current in Q_8 and Q_9 is

$$IC\ (Q_8 \text{ or } Q_9) = \frac{1}{R2} \times \frac{kT}{q} \ln 7$$

or approximately 1µA at +25°C

Where k = Boltzman's Constant
q = Charge on an Electron
and T = Absolute Temperature in ^{o}K

Transistors Q_5, Q_6, and Q_7 assure that the V_{CE} of Q_3, Q_4, and Q_9 remain constant with supply voltage variations. This ensures a constant current supply free from variations.

The base current of Q_1 provides sufficient start up current for the constant source; there being two stable states for this type of circuit - either ON as defined above, or OFF if no start up current is provided. Leakage current in the transistors is not sufficient in itself to guarantee reliable startup.

Q_4 is matched to Q_3 and Q_2; Q_{10} is matched to Q_9. Thus the IC and V_{BE} of Q_{10} are identical to that of Q_9 or Q_8. To generate the bandgap voltage, it is necessary to sum a voltage equal to the base emitter voltage of Q_9 to a voltage proportional to the difference of the base emitter voltages of two transistors Q_8 and Q_9 operating at two current densities.

$$\text{Thus } 1.5 = V_{BE}\ (Q_9 \text{ or } Q_{10}) + \frac{R_3}{R_2} \times \frac{kT}{q}$$

$$\text{which provides: } \frac{R_3}{R_2} = 12 \text{ (approximately.)}$$

The total supply current consumed by the voltage reference section is approximately 6µA at room temperature. A voltage at the THRESHOLD input is compared to the reference 1.15V by the comparator consisting of transistors Q_{11} through Q_{17}. The outputs from the comparator are limited to two diode drops less than V+ or approximately 1.1V. Thus the base current into the hysteresis output transistor is limited to about 500nA and the collector current of Q_{19} to 100µA.

In the case of the ICL8211, Q_{21} is proportioned to have 70 times the emitter area of Q_{20} thereby limiting the output current to approximately 7mA, whereas for the ICL8212

almost all the collector current of Q_{19} is available for base drive to Q_{21}, resulting in a maximum available collector current of the order of 30mA. It is advisable to externally limit this current to 25mA or less.

Applications

The ICL8211 and ICL8212 are similar in many respects, especially with regard to the setup of the input trip conditions and hysteresis circuitry. The following discussion describes both devices, and where differences occur they are clearly noted.

General Information

Threshold Input Considerations

Although any voltage between -5V and V+ may be applied to the THRESHOLD terminal, it is recommended that the THRESHOLD voltage does not exceed about +6V since above that voltage the threshold input current increases sharply. Also, prolonged operation above this voltage will lead to degradation of device characteristics.

The outputs change states with an input THRESHOLD voltage of approximately 1.15V. Input and output waveforms are shown in Figure 21 for a simple 1.15V level detector.

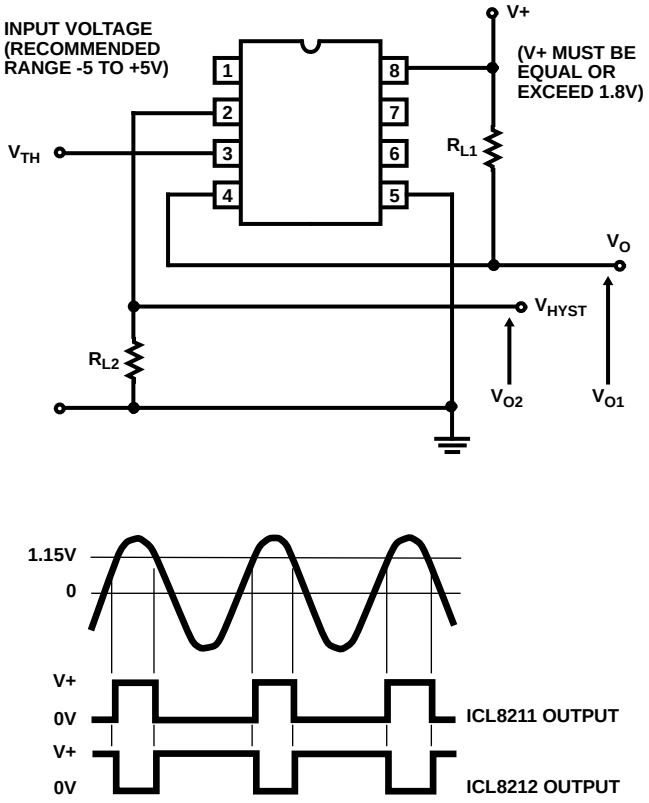

FIGURE 21. VOLTAGE LEVEL DETECTION

The HYSTERESIS output is a low current output and is intended primarily for input threshold voltage hysteresis applications. If this output is used for other applications it is suggested that output currents be limited to 10µA or less.

The regular OUTPUT's from either the ICL8211 or ICL8212 may be used to drive most of the common logic families such as TTL or CMOS using a single pullup resistor. There is a guaranteed TTL fanout of 2 for the ICL8211 and 4 for the ICL8212.

A principal application of the ICL8211 is voltage level detection, and for that reason the OUTPUT current has been limited to typically 7mA to permit direct drive of an LED connected to the positive supply without a series current limiting resistor.

On the other hand the ICL8212 is intended for applications such as programmable zener references, and voltage regulators where output currents well in excess of 7mA are desirable. Therefore, the output of the ICL8212 is not current limited, and if the output is used to drive an LED, a series current limiting resistor must be used.

In most applications an input resistor divider network may be used to generate the 1.15V required for V_{TH}. For high accuracy, currents as large as 50µA may be used, however for those applications where current limiting may be desirable, (such as when operating from a battery) currents as low as 6mA may be considered without a great loss of accuracy. 6mA represents a practical minimum, since it is about this level where the device's own input current becomes a significant percentage of that flowing in the divider network.

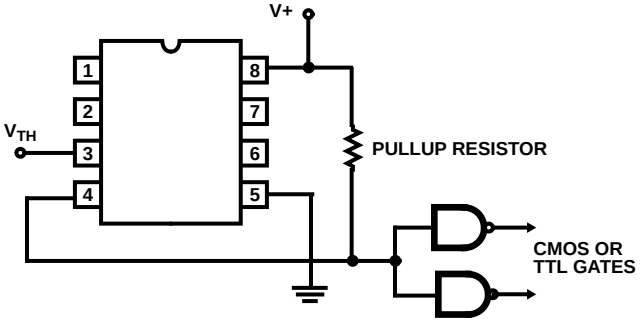

FIGURE 22. OUTPUT LOGIC INTERFACE

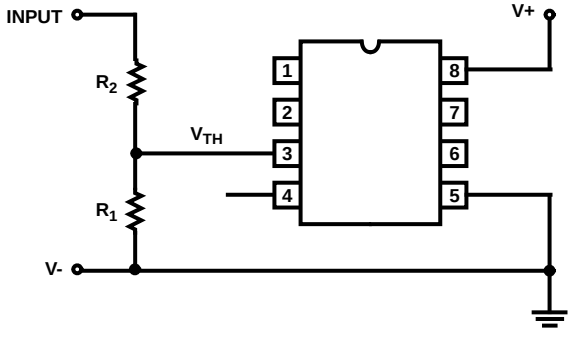

FIGURE 23. INPUT RESISTOR NETWORK CONSIDERATIONS

Case 1. High accuracy required, current in resistor network unimportant Set I = 50µA for V_{TH} = 1.15V $\therefore$ $R_1 \rightarrow$ 20kΩ

Case 2. Good accuracy required, current in resistor network important Set I = 7.5µA for V_{TH} = 1.15V $\therefore$ $R_1 \rightarrow$ 150kΩ

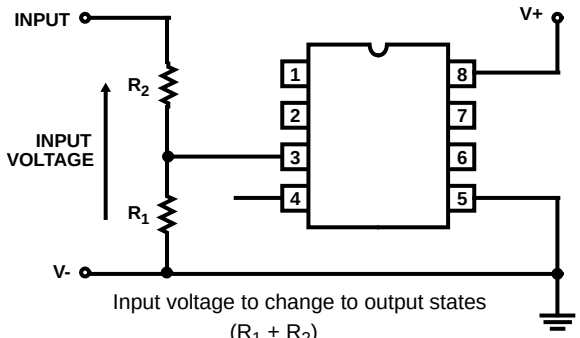

FIGURE 24. RANGE OF INPUT VOLTAGE GREATER THAN +1.15 VOLTS

Setup Procedures For Voltage Level Detection

Case 1. Simple voltage detection no hysteresis

Unless an input voltage of approximately 1.15V is to be detected, resistor networks will be used to divide or multiply the unknown voltage to be sensed. Figure 25 shows procedures on how to set up resistor networks to detect INPUT VOLTAGES of any magnitude and polarity.

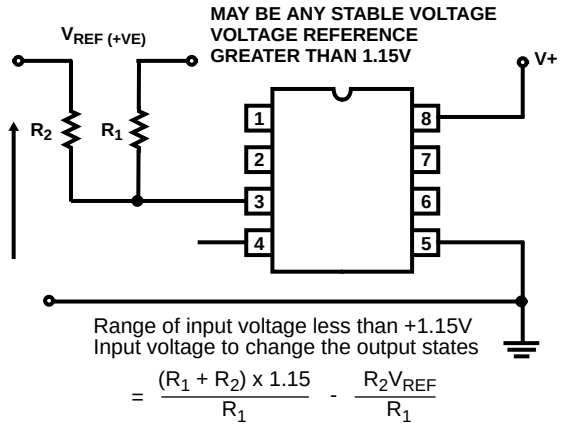

FIGURE 25. INPUT RESISTOR NETWORK SETUP PROCEDURES

For supply voltage level detection applications the input resistor network is connected across the supply terminals as shown in Figure 26.

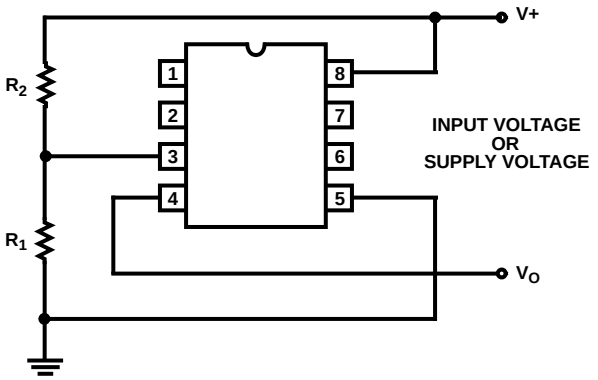

FIGURE 26. COMBINED INPUT AND SUPPLY VOLTAGES

Case 2. Use of the HYSTERESIS function

The disadvantage of the simple detection circuits is that there is a small but finite input range where the outputs are neither totally 'ON' nor totally 'OFF'. The principle behind hysteresis is to provide positive feedback to the input trip point such that there is a voltage difference between the input voltage necessary to turn the outputs ON and OFF.

The advantage of hysteresis is especially apparent in electrically noisy environments where simple but positive voltage detection is required. Hysteresis circuitry, however, is not limited to applications requiring better noise performance but may be expanded into highly complex systems with multiple voltage level detection and memory applications-refer to specific applications section.

There are two simple methods to apply hysteresis to a circuit for use in supply voltage level detection. These are shown in Figure 27.

The circuit of Figure 27A requires that the full current flowing in the resistor network be sourced by the HYSTERESIS output, whereas for circuit Figure 27B the current to be sourced by the HYSTERESIS output will be a function of the ratio of the two trip points and their values. For low values of hysteresis, circuit Figure 27B is to be preferred due to the offset voltage of the hysteresis output transistor.

A third way to obtain hysteresis (ICL8211 only) is to connect a resistor between the OUTPUT and the THRESHOLD terminals thereby reducing the total external resistance between the THRESHOLD and GROUND when the OUTPUT is switched on.

Practical Applications

Low Voltage Battery Indicator (Figure 28)

This application is particularly suitable for portable or remote operated equipment which requires an indication of a depleted or discharged battery. The quiescent current taken by the system will be typically 35µA which will increase to 7mA when the lamp is turned on. R_3 will provide hysteresis if required.

Nonvolatile Low Voltage Detector (Figure 29)

In this application the high trip voltage V_{TR2} is set to be above the normal supply voltage range. On power up the initial condition is A. On momentarily closing switch S_1 the operating point changes to B and will remain at B until the supply voltage drops below VTR1, at which time the output will revert to condition A. Note that state A is always retained if the supply voltage is reduced below V_{TR1} (even to zero volts) and then raised back to V_{NOM}.

Nonvolatile Power Supply Malfunction Recorde (Figure 30 and Figure 31)

In many systems a transient or an extended abnormal (or absence of a) supply voltage will cause a system failure. This failure may take the form of information lost in a volatile semiconductor memory stack, a loss of time in a timer or even possible irreversible damage to components if a supply voltage exceeds a certain value.

It is, therefore, necessary to be able to detect and store the fact that an **out-of-operating range** supply voltage condition has occurred, even in the case where a supply voltage may

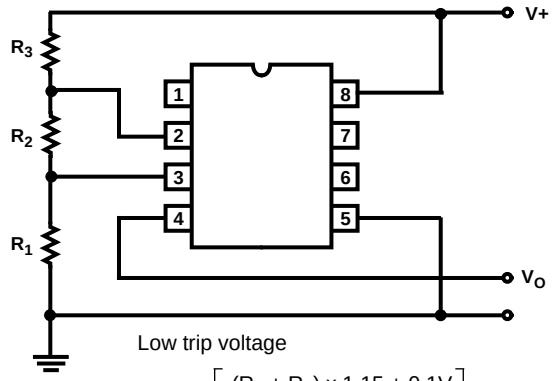

Low trip voltage

$$V_{TR1} = \left[\frac{(R_1 + R_2) \times 1.15 + 0.1V}{R_1} \right] \text{ volts}$$

High trip voltage

$$V_{TR2} = \frac{(R_1 + R_2 + R_3)}{R_1} \times 1.15V$$

FIGURE 27A.

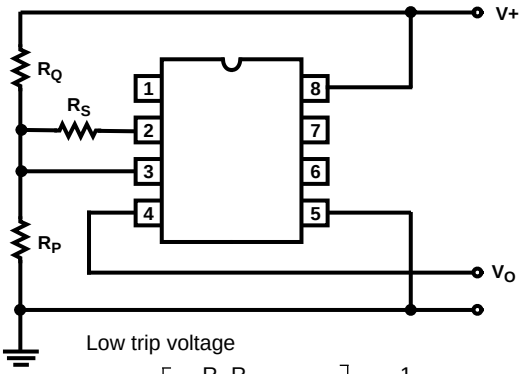

Low trip voltage

$$V_{TR1} = \left[\frac{R_Q R_S}{(R_Q + R_S)} + R_P \right] \times \frac{1}{R_P} \times 1.15V$$

High trip voltage

$$V_{TR2} = \frac{(R_P + R_Q)}{R_P} \times 1.15V$$

FIGURE 27B.

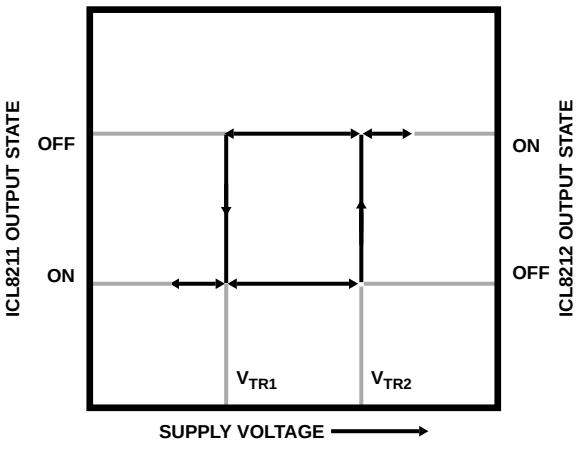

FIGURE 27C.

FIGURE 27. TWO ATERNATIVE VOLTAGE DETECTION CIRCUITS EMPLOYING HYSTERESIS TO PROVIDE PAIRS OF WELL DEFINED TRIP VOLTAGES

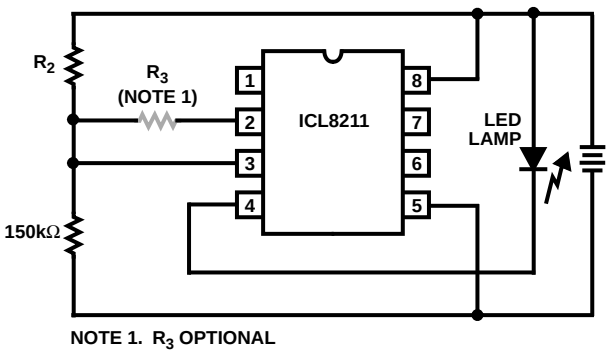

NOTE 1. R_3 OPTIONAL

FIGURE 28. LOW VOLTAGE BATTERY INDICATOR

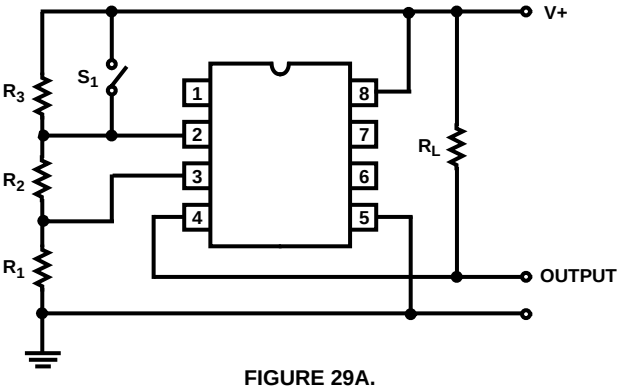

FIGURE 29A.

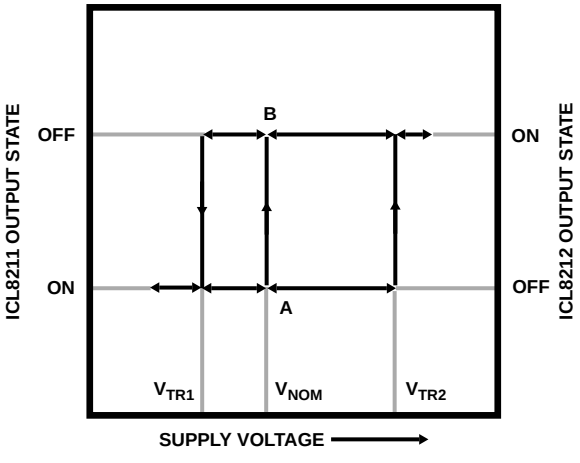

FIGURE 29B.

FIGURE 29. NON-VOLATILE LOW VOLTAGE INDICATOR

have dropped to zero. Upon power up to the normal operating voltage this record must have been retained and easily interrogated. This could be important in the case of a transient power failure due to a faulty component or intermittent power supply, open circuit, etc., where direct observation of the failure is difficult.

A simple circuit to record an out of range voltage excursion may be constructed using an ICL8211, an ICL8212 plus a few resistors. This circuit will operate to 30V without exceeding the maximum ratings of the ICs. The two voltage limits defining the in range supply voltage may be set to any value between 2.0V and 30V.

The ICL8212 is used to detect a voltage, V_2, which is the upper voltage limit to the operating voltage range. The ICL8211 detects the lower voltage limit of the operating voltage range, V_1. Hysteresis is used with the ICL8211 so that the output can be stable in either state over the operating voltage range V_1 to V_2 by making V_3 - the upper trip point of the ICL8211 much higher in voltage than V_2.

The output of the ICL8212 is used to force the output of the ICL8211 into the ON state above V_2. Thus there is no value of the supply voltage that will result in the output of the ICL8211 changing from the ON state to the OFF state. This may be achieved only by shorting out R3 for values of supply voltage between V_1 and V_2.

Constant Current Sources (Figure 32)

The ICL8212 may be used as a constant current source of value of approximately 25µA by connecting the THRESHOLD terminal to GROUND. Similarly the ICL8211 will provide a 130µA constant current source. The equivalent parallel resistance is in the tens of megohms over the supply voltage range of 2V to 30V. These constant current sources may be used to provide basing for various circuitry including differential amplifiers and comparators. See Typical Operating Characteristics for complete information.

Programmable Zener Voltage Reference (Figure 33)

The ICL8212 may be used to simulate a zener diode by connecting the OUTPUT terminal to the V_Z output and using a resistor network connected to the THRESHOLD terminal to program the zener voltage

$$V_{ZENER} = \frac{(R_1 + R_2)}{R_1} \text{ x } 1.l5V.$$

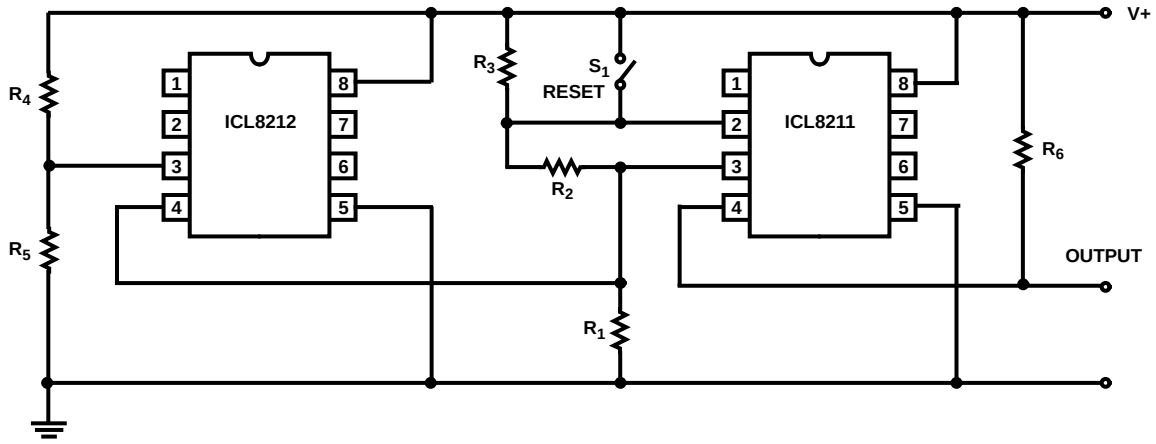

FIGURE 30. NON-VOLATILE POWER SUPPLY MALFUNCTION RECORDER

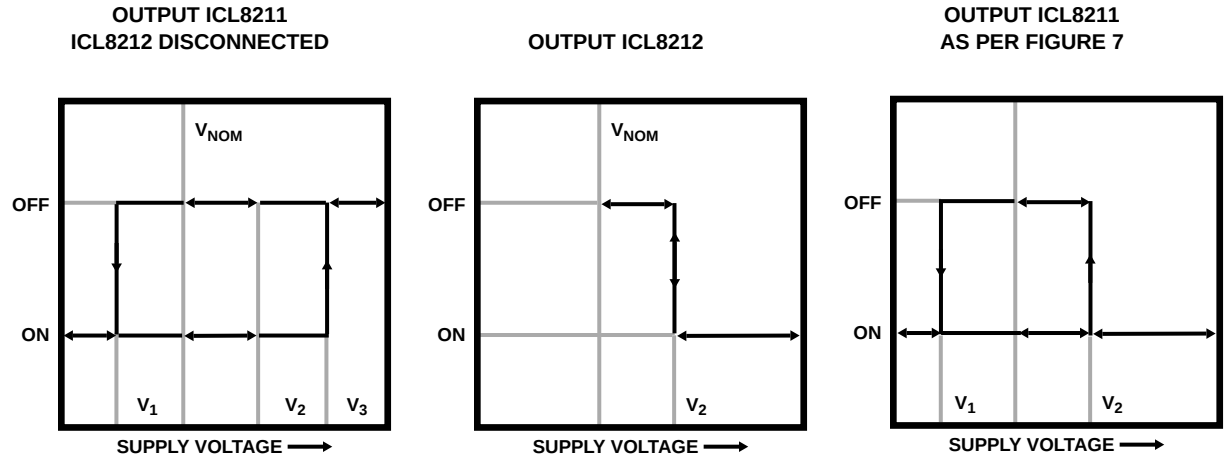

FIGURE 31. OUTPUT STATES OF THE ICL8211 AND ICL8212 AS A FUNCTION OF THE SUPPLY VOLTAGE

Since there is no internal compensation in the ICL8212 it is necessary to use a large capacitor across the output to prevent oscillation.

Zener voltages from 2V to 30V may be programmed and typical impedance values between 300µA and 25µA will range from 4Ω to 7Ω. The knee is sharper and occurs at a significantly lower current than other similar devices available.

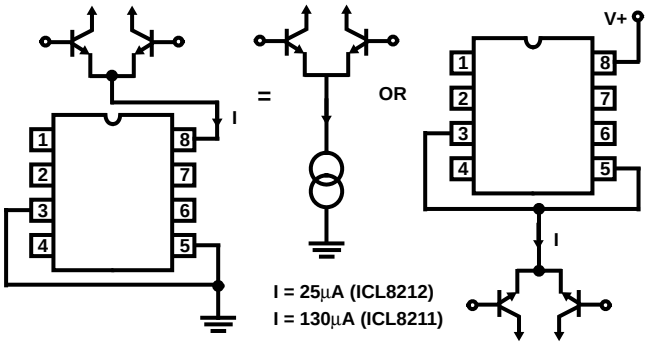

FIGURE 32. CONSTANT CURRENT SOURCE APPLICATIONS

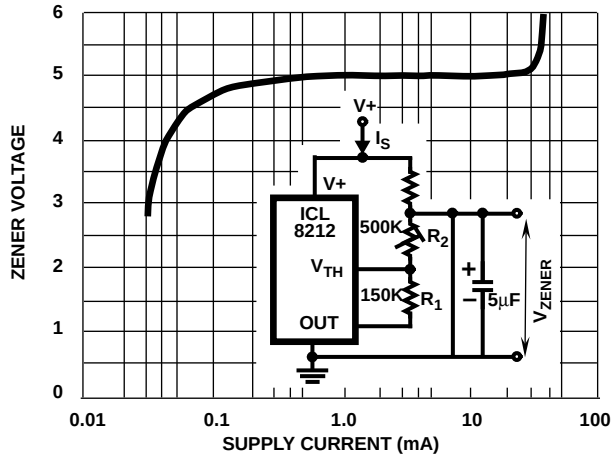

FIGURE 33. PROGRAMMABLE ZENER VOLTAGE REFERENCE

Precision Voltage Regulator (Figure 34)

The ICL8212 may be used as the controller for a highly stable series voltage regulator. The output voltage is simply programmed, using a resistor divider network R_1 and R_2. Two capacitors C_1 and C_2 are required to ensure stability since the ICL8212 is uncompensated internally.

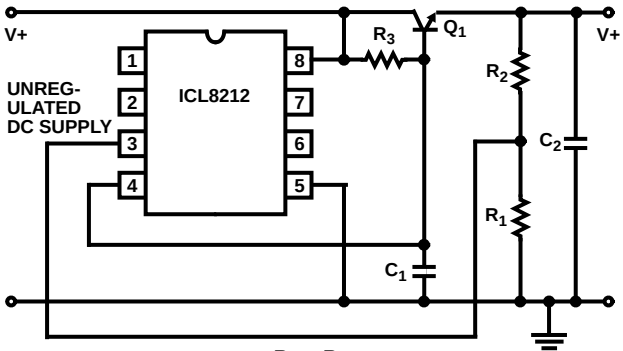

$$V_{OUT} = \frac{R_2 + R_1}{R_1} \times 1.15V$$

FIGURE 34. PRECISION VOLTAGE REGULATOR

This regulator may be used with lower input voltages than most other commercially available regulators and also consumes less power for a given output control current than any commercial regulator. Applications would therefore include battery operated equipment especially those operating at low voltages.

High Supply Voltage Dump Circuit (Figure 35)

In many circuit applications it is desirable to remove the power supply in the case of high voltage overload. For circuits consuming less than 5mA this may be achieved using an ICL8211 driving the load directly. For higher load currents it is necessary to use an external pnp transistor or darlington pair driven by the output of the ICL8211. Resistors R_1 and R_2 set up the disconnect voltage and R_3 provides optional voltage hysteresis if so desired.

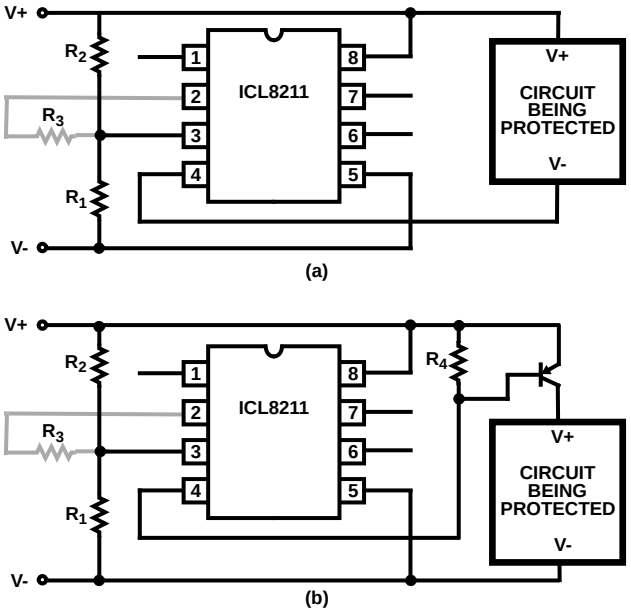

FIGURE 35. HIGH VOLTAGE DUMP CIRCUITS

Frequency Limit Detector (Figure 36)

Simple frequency limit detectors providing a GO/NO-GO output for use with varying amplitude input signals may be conveniently implemented with the ICL8211/8212. In the application shown, the first ICL8212 is used as a zero crossing detector. The output circuit consisting of R_3, R_4 and C_2 results in a slow output positive ramp. The negative range is much faster than the positive range. R_5 and R_6 provide hysteresis so that under all circumstances the second ICL8212 is turned on for sufficient time to discharge C_3. The time constant of R_7 C_3 Is much greater than R_4 C_2. Depending upon the desired output polarities for low and high input frequencies, either an ICL8211 or an ICL8212 may be used as the output driver.

This circuit is sensitive to supply voltage variations and should be used with a stabilized power supply. At very low frequencies the output will switch at the input frequency.

Switch Bounce Filter (Figure 37)

Single pole single throw (SPST) switches are less costly and more available than single pole double throw (SPDT) switches.

SPST switches range from push button and slide types to calculator keyboards. A major problem with the use of switches is the mechanical bounce of the electrical contacts on closure. Contact bounce times can range from a fraction of a millisecond to several tens of milliseconds depending upon the switch type. During this contact bounce time the switch may make and break contact several times. The circuit shown in Figure 37 provides a rapid charge up of C_1 to close to the positive supply voltage (V_1) on a switch closure and a corresponding slow discharge of C_1 on a switch break. By proportioning the time constant of R_1 C_1 to approximately the manufacturer's bounce time the output as terminal #4 of the ICL8211/8212 will be a single transition of state per desired switch closure

Low Voltage Power Disconnect (Figure 38)

There are some classes of circuits that require the power supply to be disconnected if the power supply voltage falls below a certain value. As an example, the National LM199 precision reference has an on chip heater which malfunctions with supply voltages below 9V causing an excessive device temperature. The ICL8212 may be used to detect a power supply voltage of 9V and turn the power supply off to the LM199 heater section below that voltage.

For further applications, see AN027 "Power Supply Design using the ICL8211 and ICL8212."

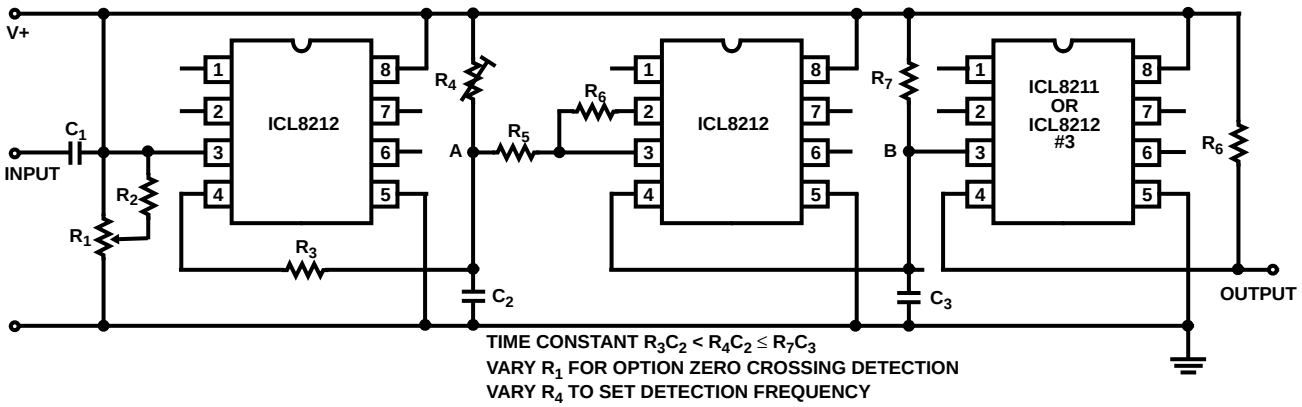

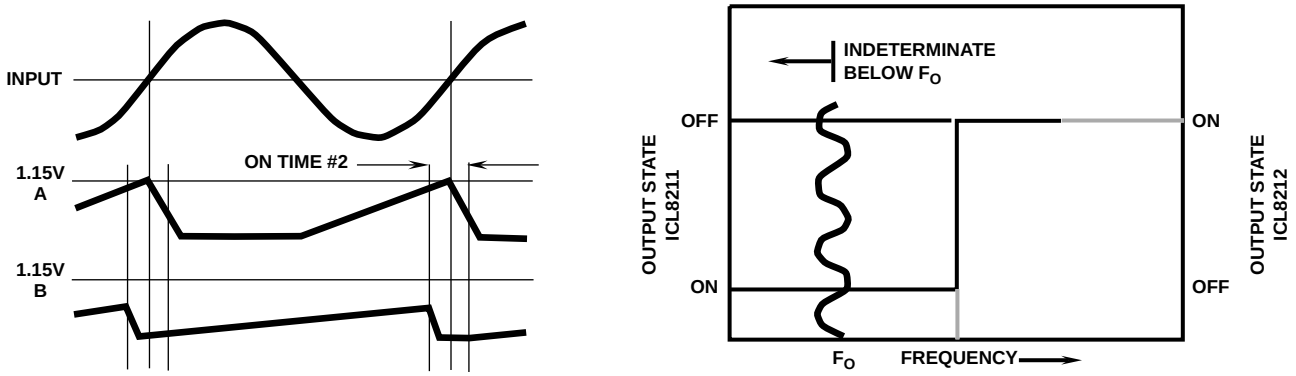

FIGURE 36. FREQUENCY LIMIT DETECTOR

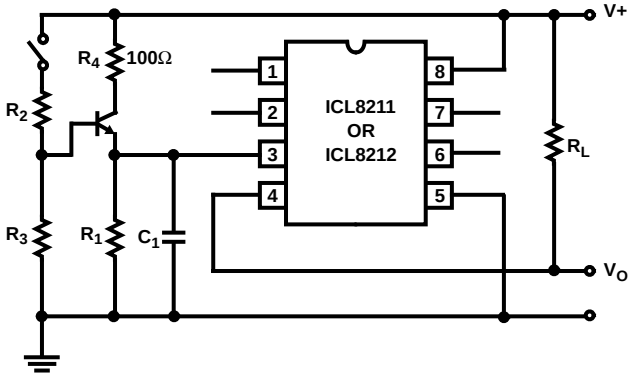

FIGURE 37. SWITCH BOUNCE FILTER

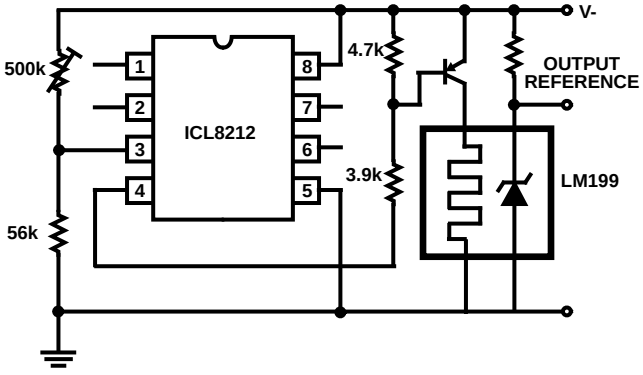

FIGURE 38. LOW VOLTAGE POWER SUPPLY DISCONNECT

ENTEGRECİ

Bu belge www.entegreci.com üzerinden sunulmaktadır.

Elektronik komponent tedarikinde Entegreci

Entegreci, Eskişehir merkezli, Türkiye geneline satış yapan bir elektronik komponent mağazasıdır. Entegreler (IC), mikrodenetleyiciler, transistörler, diyotlar, pasif elemanlar, konnektörler, modüller ve geliştirme kartları tek adetten seri üretim adetlerine kadar satılır. Ürün sayfalarında güncel stok durumunu, fiyatı ve datasheet bağlantısını bulabilirsiniz.

Parça koduyla arama

Üretici parça numarasını yazın; stok ve fiyatı hemen görün.

www.entegreci.com

Ürün kategorileri

Entegreden kapasitöre tüm elektronik komponent kategorileri.

Kategorilere göz atın

Üreticiler

Aradığınız üreticinin ürünlerini tek sayfada inceleyin.

Üreticileri görün

Toplu alım ve teklif

Listede olmayan ya da yüksek adetli parçalar için teklif isteyin.

Teklif isteyin

www.entegreci.com | **destek@entegreci.com** | **0850 305 90 34**

Entegreci is an online electronic components store based in Türkiye. Search by manufacturer part number to see stock, prices and datasheets for integrated circuits, microcontrollers, transistors, passive components and connectors, or request a quote for parts that are not listed.

Bu sayfa Entegreci tarafından eklenmiştir. Belgenin önceki sayfaları asıl yayıncısına aittir ve içeriği değiştirilmemiştir; en güncel sürüm için belgenin yayıncısına başvurun.