High-Voltage Current-Mode PWM Controller

Ordering Information

$+V_{IN}$		Feedback Accuracy	Max Duty Cycle	Package Options			
Min	Max			16 Pin Plastic DIP	16 Pin SOIC	20 Pin Plastic PLCC	DIE
10V	450V	<±2%	49%	HV9120P	HV9120NG	HV9120PJ	HV9120X
10V	450V	<±2%	99%	HV9123P	HV9123NG	HV9123PJ	HV9123X

Standard temperature range for all parts is industrial (-40° to +85°C).

Features

- ❑ 10 to 450V input acceptance range
- ❑ <1.3mA supply current
- ❑ >1.0MHz clock
- ❑ >20:1 dynamic range @ 500KHz
- ❑ Low internal noise

Applications

- ❑ Off-line high frequency power supplies
- ❑ Universal input power supplies
- ❑ High density power supplies
- ❑ Very high efficiency power supplies
- ❑ Extra wide load range power supplies

Absolute Maximum Ratings

Voltages are referenced to $-V_{IN}$

$+V_{IN}$ Input Voltage	450V
V_{DD} Device Supply Voltage	15.5V
Logic Input Voltages	-0.3 to V_{DD} + 0.3V
Linear Input Voltages	-0.3 to V_{DD} + 0.3V
I_{IN} Preregulator Input Current (continuous)	2.5mA
T_j Operating Junction Temperature	150° C
Storage Temperature	-65°C to 150°C
Power Dissipation, PDIP	1000mW
Power Dissipation PLCC	1400mW
Power Dissipation SOIC	900mW

General Description

The Supertex HV9120 and HV9123 are Switch Mode Power Supply (SMPS) controller subsystems that can start and run directly from almost any DC input, from a 12V battery to a rectified and filtered 240V AC line. They contain all the elements required to build a single-switch converter except for the switch, magnetic assembly, output rectifier(s) and filter(s).

A unique input circuit allows the 912x to self-start directly from a high voltage input, and subsequently take the power to operate from one of the outputs of the converter it is controlling, allowing very efficient operation while maintaining input-to-output galvanic isolation limited in voltage only by the insulation system of the associated magnetic assembly. A ±2% internal bandgap reference, internal operational amplifier, very high speed comparator, and output buffer allow production of rugged, high performance, high efficiency power supplies of 50 watts or more, which can still be over 80% efficient at outputs of 1.0W or less. The wide dynamic range of the controller system allows designs with extremely wide line and load variations with much less difficulty and much higher efficiency than usual. The exceptionally wide input voltage acceptance range also allows much better usage of energy stored in input dropout capacitors than with other PWM ICs. Remote on/off controls allow either latching or nonlatching remote shutdown. During shutdown, power required is under 6.0mW.

For detailed circuit and application information, please refer to application notes AN-H13 and AN-H21 to AN-H24.

11/12/01

Supertex Inc. does not recommend the use of its products in life support applications and will not knowingly sell its products for use in such applications unless it receives an adequate "products liability indemnification insurance agreement." Supertex does not assume responsibility for use of devices described and limits its liability to the replacement of devices determined to be defective due to workmanship. No responsibility is assumed for possible omissions or inaccuracies. Circuitry and specifications are subject to change without notice. For the latest product specifications, refer to the Supertex website: http://www.supertex.com. For complete liability information on all Supertex products, refer to the most current databook or to the Legal/Disclaimer page on the Supertex website.

Electrical Characteristics

(Unless otherwise specified, V_{DD} = 10V, $+V_{IN}$ = 48V, Discharge = $-V_{IN}$ = 0V, R_{BIAS} = 390KΩ, R_{OSC} = 330KΩ,T_A = 25°C.)

Symbol	Parameters		Min	Typ	Max	Unit	Conditions
Reference							
V_{REF}	Output Voltage		3.92	4.00	4.08	V	R_L = 10MΩ
			3.84	4.00	4.16		R_L = 10MΩ, T_A = -55°C to 125°C
Z_{OUT}	Output Impedance[1]		15	30	45	KΩ	
I_{SHORT}	Short Circuit Current			125	250	µA	V_{REF} = $-V_{IN}$
ΔV_{REF}	Change in V_{REF} with Temperature[1]			0.25		mV/°C	T_A = -55°C to 125°C
Oscillator							
f_{MAX}	Oscillator Frequency		1.0	3.0		MHz	R_{OSC} = 0Ω
f_{OSC}	Initial Accuracy[2]		80	100	120	KHz	R_{OSC} = 330KΩ
			160	200	240		R_{OSC} = 150KΩ
ΔV_{OSC}	Voltage Stability				15	%	9.5V < V_{DD} <13.5V
TC_{OSC}	Temperature Coefficient[1]			170		ppm/°C	T_A = -55°C to 125°C
PWM							
D_{MAX}	Maximum Duty Cycle[1]	HV9120	49.0	49.4	49.6	%	
		HV9123	95	97	99		
D_{MIN}	Deadtime[1]	HV9123		225		nsec	
	Minimum Duty Cycle				0	%	
	Minimum Pulse Width Before Pulse Drops Out [1]			80	125	nsec	
Current Limit							
V_{lim}	Maximum Input Signal		1.0	1.2	1.4	V	V_{FB} = 0V
t_d	Delay to Output[1]			80	150	ns	V_{SENSE} = 1.5V, $V_{COMP} \leq$ 2.0V
Error Amplifier							
V_{FB}	Feedback Voltage		3.92	4.00	4.08	V	V_{FB} Shorted to Comp
I_{IN}	Input Bias Current			25	500	nA	V_{FB} = 4.0V
V_{OS}	Input Offset Voltage		nulled during trim				
A_{VOL}	Open Loop Voltage Gain[1]		60	80		dB	
GB	Unity Gain Bandwidth[1]		1.0	1.3		MHz	
Z_{OUT}	Output Impedance[1]		see fig. 1			Ω	
I_{SOURCE}	Output Source Current		-1.4	-2.0		mA	V_{FB} = 3.4V
I_{SINK}	Output Sink Current		0.12	0.15		mA	V_{FB} = 4.5V
PSRR	Power Supply Rejection[1]		see fig. 2			dB	

Notes:

1. Guaranteed by design. Not subject to production test.
2. Stray C on OSC IN pin must be ≤5pF.

Electrical Characteristics (continued)

(Unless otherwise specified, V_{DD} = 10V, $+V_{IN}$ = 48V, Discharge = $-V_{IN}$ = 0V, R_{BIAS} = 390KΩ, R_{OSC} = 330KΩ,T_A = 25°C.)

Symbol	Parameters	Min	Typ	Max	Unit	Conditions
Pre-regulator/Startup						
$+V_{IN}$	Input Voltage			450	V	I_{IN} < 10µA; V_{CC} > 9.4V
$+I_{IN}$	Input Leakage Current			10	µA	V_{DD} > 9.4V
V_{TH}	V_{DD} Pre-regulator Turn-off Threshold Voltage	8.0	8.7	9.4	V	I_{PREREG} = 10µA
V_{LOCK}	Undervoltage Lockout	7.0	8.1	8.9	V	
Supply						
I_{DD}	Supply Current		0.75	1.3	mA	C_L < 75pF
I_Q	Quiescent Supply Current		0.55		mA	$\overline{\text{Shutdown}}$ = $-V_{IN}$
I_{BIAS}	Nominal Bias Current		20		µA	
V_{DD}	Operating Range	9.0		13.5	V	
Shutdown Logic						
t_{SD}	$\overline{\text{Shutdown}}$ Delay[1]		50	100	ns	C_L = 500pF, V_{SENSE} = $-V_{IN}$
t_{SW}	$\overline{\text{Shutdown}}$ Pulse Width[1]	50			ns	
t_{RW}	RESET Pulse Width[1]	50			ns	
t_{LW}	Latching Pulse Width[1]	25			ns	$\overline{\text{Shutdown}}$ and reset low
V_{IL}	Input Low Voltage			2.0	V	
V_{IH}	Input High Voltage	7.0			V	
I_{IH}	Input Current, Input Voltage High		1.0	5.0	µA	V_{IN} = V_{DD}
I_{IL}	Input Current, Input Voltage Low		-25	-35	µA	V_{IN} = 0V
Output						
V_{OH}	Output High Voltage	V_{DD} -0.25			V	I_{OUT} = 10mA
		V_{DD} -0.3				I_{OUT} = 10mA, T_A = -55°C to 125°C
V_{OL}	Output Low Voltage			0.2	V	I_{OUT} = -10mA
				0.3		I_{OUT} = -10mA, T_A = -55°C to 125°C
R_{OUT}	Output Resistance, Pull Up		15	25	Ω	I_{OUT} = ±10mA
	Pull Down		8.0	20		
	Pull Up		20	30	Ω	I_{OUT} = ±10mA,
	Pull Down		10	30		T_A = -55°C to 125°C
t_R	Rise Time[1]		30	75	ns	C_L = 500pF
t_F	Fall Time[1]		20	75	ns	C_L = 500pF

Note:

1. Guaranteed by design. Not subject to production test.

Truth Table

$\overline{\text{Shutdown}}$	Reset	Output
H	H	Normal Operation
H	H → L	Normal Operation, No Change
L	H	Off, Not Latched
L	L	Off, Latched
L → H	L	Off, Latched, No Change

Shutdown Timing Waveforms

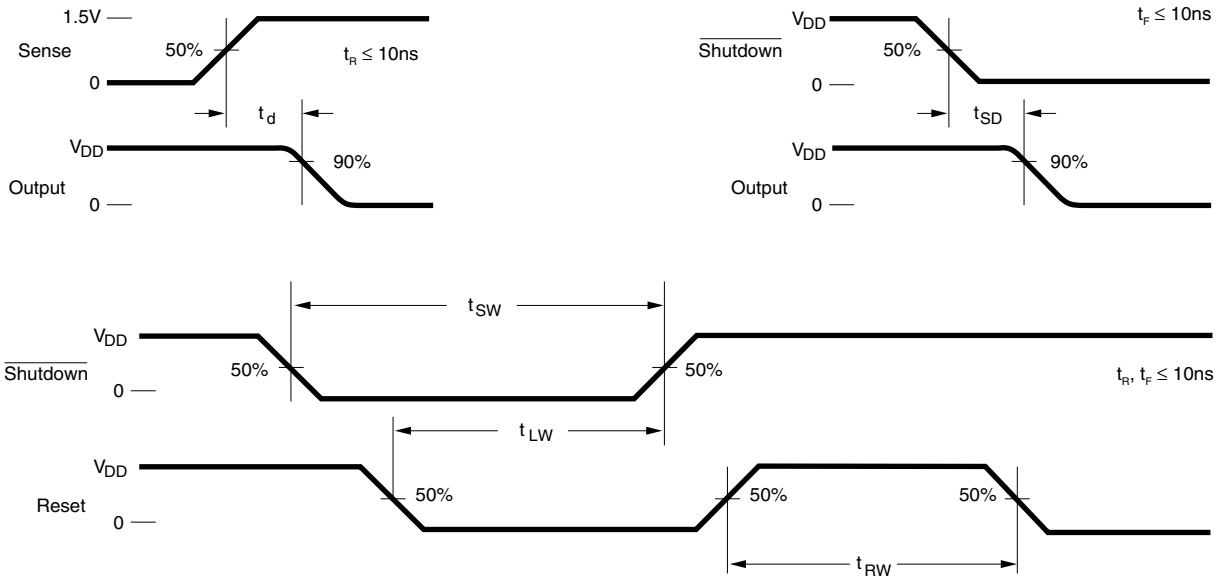

Functional Block Diagram

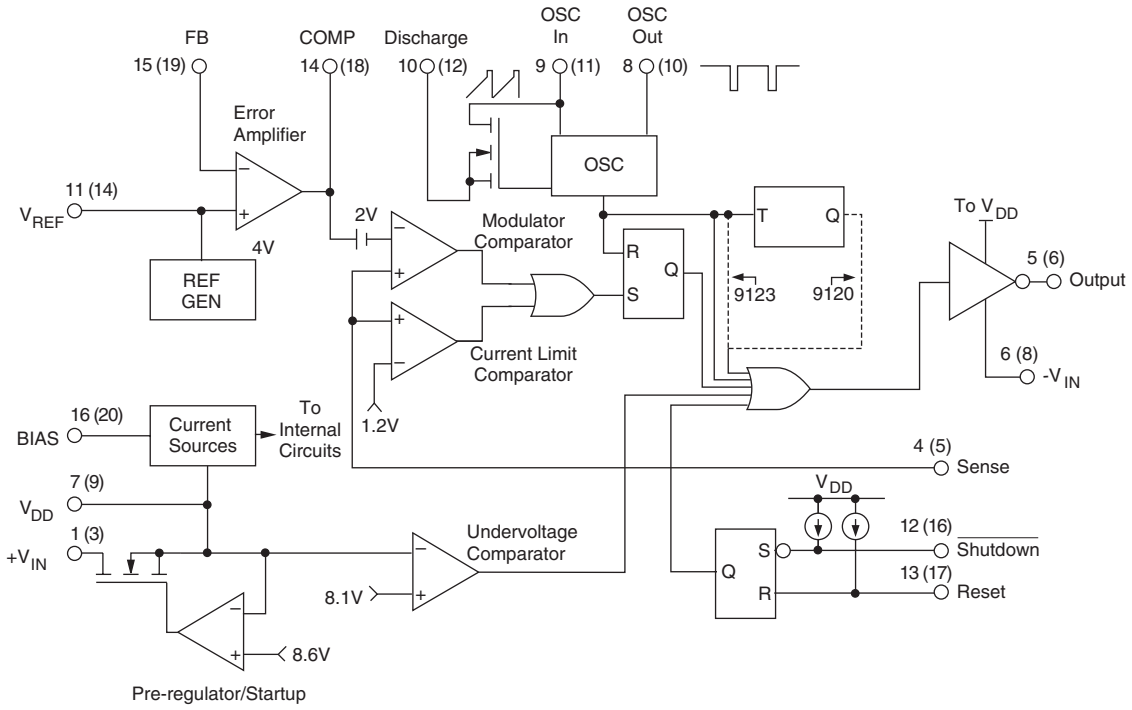

Pin number in parentheses are for PLCC package.

Typical Performance Curves

Fig. 1

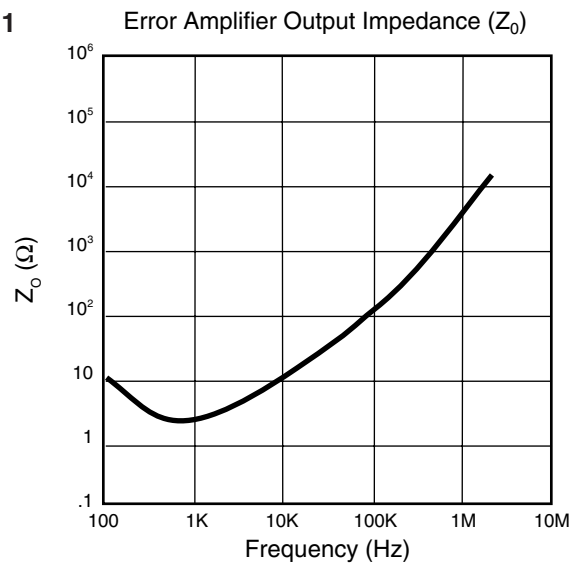

Fig. 2

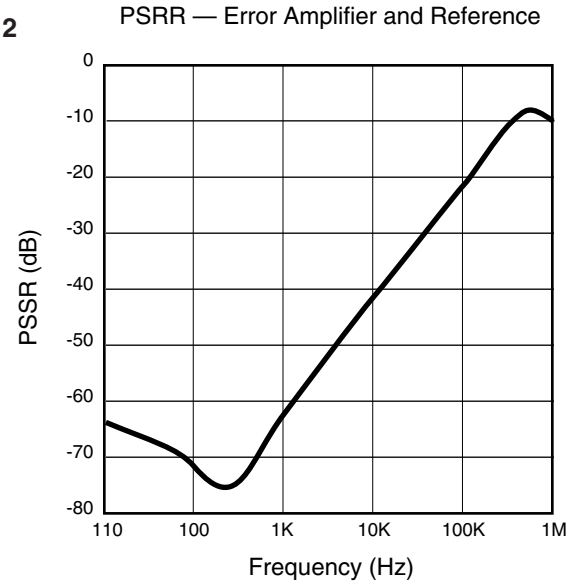

Fig. 3

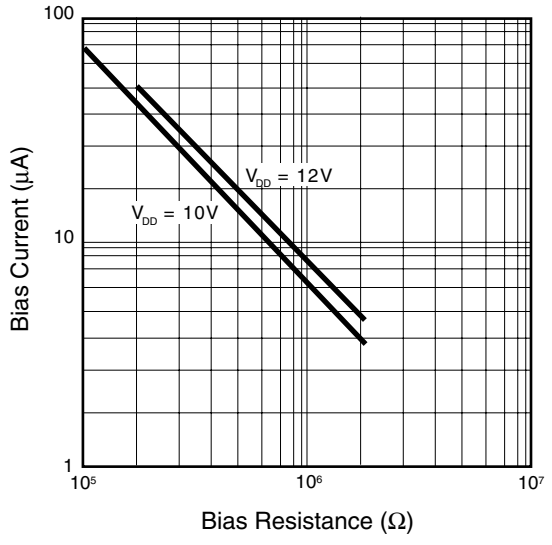

Fig. 4

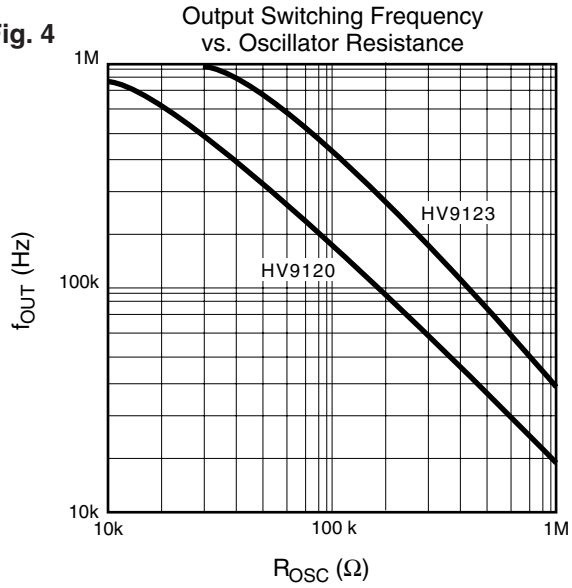

Fig. 5

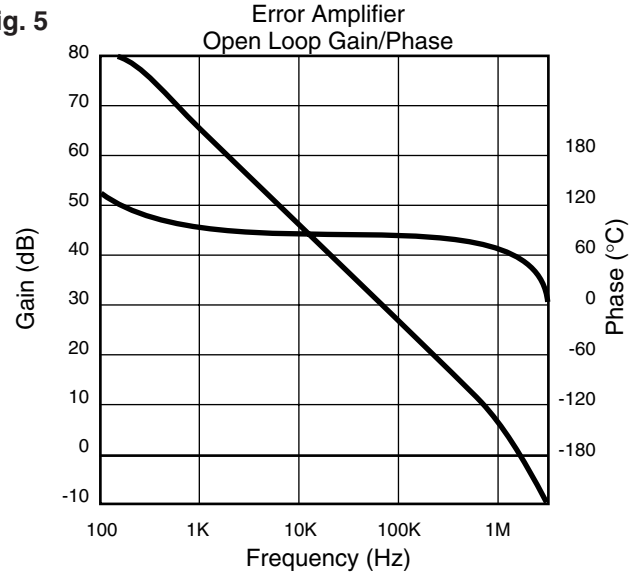

Fig. 6

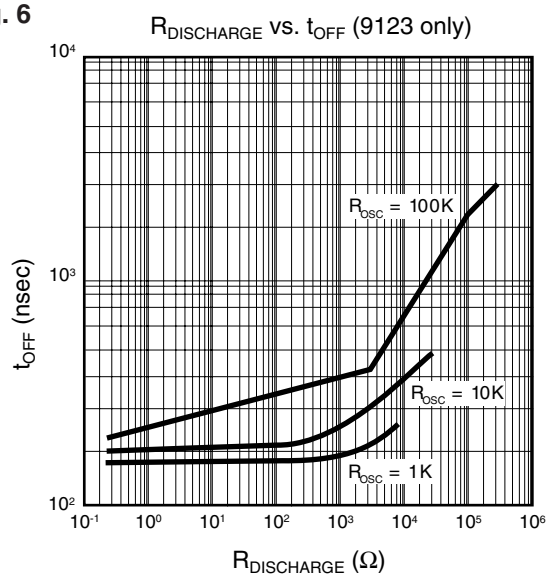

Test Circuits

Error Amp Z_{OUT}

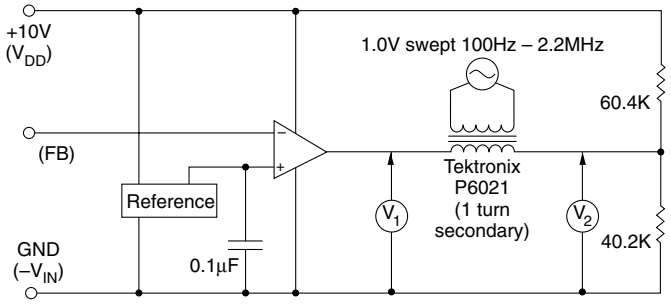

PSRR

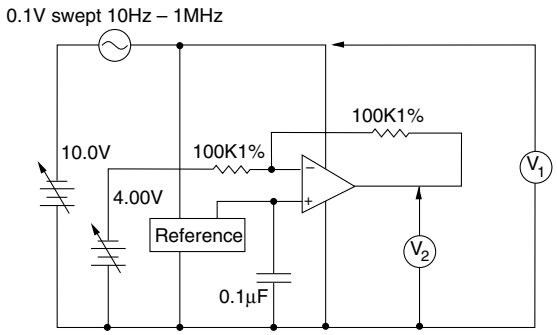

NOTE: Set Feedback Voltage so that
$V_{COMP} = V_{DIVIDE} \pm 1mV$ before connecting transformer

Detailed Description

Preregulator

The preregulator/startup circuit for the HV912x consists of a high-voltage n-channel depletion-mode DMOS transistor driven by an error amplifier to form a variable current path between the V_{IN} terminal and the V_{DD} terminal. Maximum current (about 20 mA) occurs when $V_{DD} = 0$, with current reducing as V_{DD} rises. This path shuts off altogether when V_{DD} rises to somewhere between 7.8 and 9.4V, so that if V_{DD} is held at 10 or 12V by an external source (generally the supply the chip is controlling) no current other than leakage is drawn through the high voltage transistor. This minimizes dissipation.

An external capacitor between V_{DD} and V_{SS} is generally required to store energy used by the chip in the time between shutoff of the high voltage path and the V_{DD} supply's output rising enough to take over powering the chip. This capacitor should have a value of 100X or more the *effective* gate capacitance of the MOSFET being driven, i.e.,

$C_{storage} \geq 100$ x (gate charge of FET at 10V ÷ 10V)

as well as very good high frequency characteristics. Stacked polyester or ceramic caps work well. Electrolytic capacitors are generally not suitable.

A common resistor divider string is used to monitor V_{DD} for both the undervoltage lockout circuit and the shutoff circuit of the high voltage FET. Setting the undervoltage sense point about 0.6V lower on the string than the FET shutoff point guarantees that the undervoltage lockout always releases before the FET shuts off.

Bias Circuit

An external bias resistor, connected between the bias pin and V_{SS} is required by the HV912x to set currents in a series of current mirrors used by the analog sections of the chip. Nominal external bias current requirement is 15 to 20µA, which can be set by a 390KΩ to 510KΩ resistor if a 10V V_{DD} is used, or a 510kΩ to 680KΩ resistor if V_{DD} will be 12V. A precision resistor is *not* required; ± 5% is fine.

Clock Oscillator

The clock oscillator of the HV912x consists of a ring of CMOS inverters, timing capacitors, a capacitor discharge FET, and, in the 50% maximum duty cycle versions, a frequency dividing flip-flop. A single external resistor between the OSC In and OSC Out pins is required to set oscillator frequency (see graph). For the 50% maximum duty cycle versions the Discharge pin is internally connected to V_{SS} (ground). For the 99% duty cycle version, Discharge can either be connected to V_{SS} directly or connected to V_{SS} through a resistor used to set a deadtime.

One difference exists between the Supertex HV912x and competitive 912x's: The oscillator is shut off when a shutoff command is received. This saves about 150µA of quiescent current, which aids in the construction of power supplies to meet CCITT specification I-430, and in other situations where an absolute minimum of quiescent power dissipation is required.

Reference

The Reference of the HV912x consists of a stable bandgap reference followed by a buffer amplifier which scales the voltage up to approximately 4.0V. The scaling resistors of the reference buffer amplifier are trimmed during manufacture so that the output of the error amplifier when connected in a gain of –1 configuration is as close to 4.000V as possible. This nulls out any input offset of the error amplifier. As a consequence, even though the observed reference voltage of a specific part may not be exactly 4.0V, the feedback voltage required for proper regulation will be.

A ≈50KΩ resistor is placed internally between the output of the reference buffer amplifier and the circuitry it feeds (reference output pin and non-inverting input to the error amplifier). This allows overriding the internal reference with a low-impedance voltage source ≤6.0V. Using an external reference reinstates the input offset voltage of the error amplifier, and its effect of the exact value of feedback voltage required. In general, because the reference voltage of the Supertex HV912x is not noisy, as some previous examples have been, overriding the reference should seldom be necessary.

Because the reference of the 912x is a high impedance node, and usually there will be significant electrical noise near it, a bypass capacitor between the reference pin and V_{SS} is strongly recommended. The reference buffer amplifier is intentionally compensated to be stable with a capacitive load of 0.01 to 0.1µF.

Detailed Description (continued)

Error Amplifier

The error amplifier in the HV912x is a true low-power differential input operational amplifier intended for around-the-amplifier compensation. It is of mixed CMOS-bipolar construction: A PMOS input stage is used so the common-mode range includes ground and the input impedance is very high. This is followed by bipolar gain stages which provide high gain without the electrical noise of all-MOS amplifiers. The amplifier is unity-gain stable.

Current Sense Comparators

The HV912x uses a true dual comparator system with independent comparators for modulation and current limiting. This allows the designer greater latitude in compensation design, as there are no clamps (except ESD protection) on the compensation pin. Like the error amplifier, the comparators are of low-noise BiCMOS construction.

Remote Shutdown

The shutdown and reset pins of the HV912x can be used to perform either latching or non-latching shutdown of a converter as required. These pins have internal current source pull-ups so they can be driven from open-drain logic. When not used they should be left open, or connected to V_{DD}.

Output Buffer

The output buffer of the HV912x is of standard CMOS construction (P-channel pull-up, N-channel pull-down). Thus the body-drain diodes of the output stage can be used for spike clipping if necessary, and external Schottky diode clamping of the output is not required.

Pinout



16 Pin Dip Package
top view

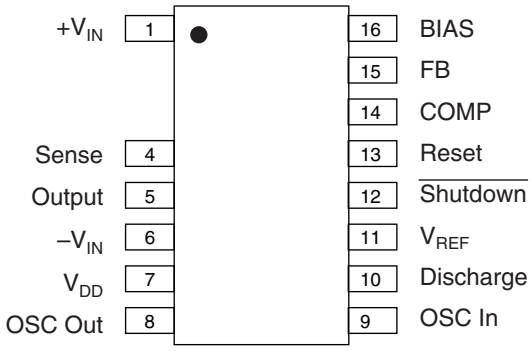

16 Pin SOIC

top view

Note: Pins 2 and 3 are removed

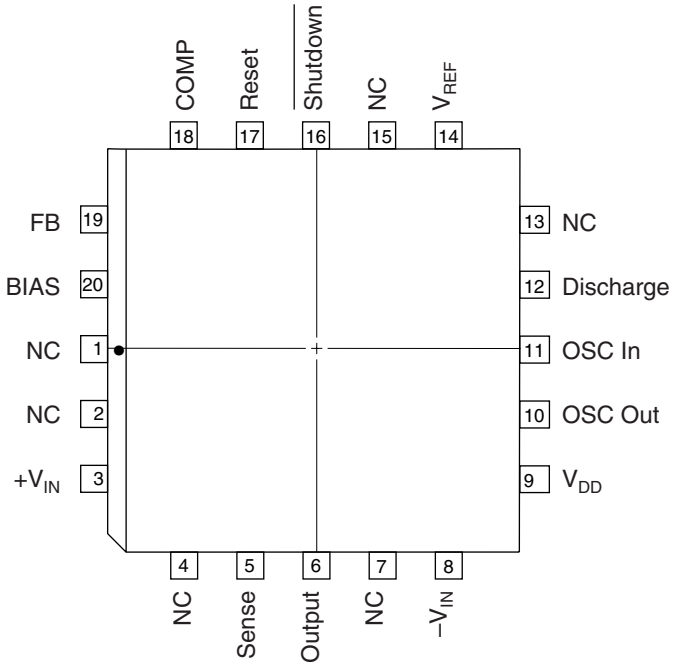

20-pin PJ Package
top view

11/12/01

©2001 Supertex Inc. All rights reserved. Unauthorized use or reproduction prohibited.

1235 Bordeaux Drive, Sunnyvale, CA 94089
TEL: (408) 744-0100 • FAX: (408) 222-4895
www.supertex.com

ENTEGRECİ

Bu belge www.entegreci.com üzerinden sunulmaktadır.

Elektronik komponent tedarikinde Entegreci

Entegreci, Eskişehir merkezli, Türkiye geneline satış yapan bir elektronik komponent mağazasıdır. Entegreler (IC), mikrodenetleyiciler, transistörler, diyotlar, pasif elemanlar, konnektörler, modüller ve geliştirme kartları tek adetten seri üretim adetlerine kadar satılır. Ürün sayfalarında güncel stok durumunu, fiyatı ve datasheet bağlantısını bulabilirsiniz.

Parça koduyla arama

Üretici parça numarasını yazın; stok ve fiyatı hemen görün.

www.entegreci.com

Ürün kategorileri

Entegreden kapasitöre tüm elektronik komponent kategorileri.

Kategorilere göz atın

Üreticiler

Aradığınız üreticinin ürünlerini tek sayfada inceleyin.

Üreticileri görün

Toplu alım ve teklif

Listede olmayan ya da yüksek adetli parçalar için teklif isteyin.

Teklif isteyin

www.entegreci.com | **destek@entegreci.com** | **0850 305 90 34**

Entegreci is an online electronic components store based in Türkiye. Search by manufacturer part number to see stock, prices and datasheets for integrated circuits, microcontrollers, transistors, passive components and connectors, or request a quote for parts that are not listed.

Bu sayfa Entegreci tarafından eklenmiştir. Belgenin önceki sayfaları asıl yayıncısına aittir ve içeriği değiştirilmemiştir; en güncel sürüm için belgenin yayıncısına başvurun.