DATA SHEET

For a complete data sheet, please also download:

- The IC04 LOCMOS HE4000B Logic Family Specifications HEF, HEC
- The IC04 LOCMOS HE4000B Logic Package Outlines/Information HEF, HEC

HEF4052B
MSI
Dual 4-channel analogue multiplexer/demultiplexer

Product specification
File under Integrated Circuits, IC04

January 1995

Philips Semiconductors

PHILIPS

Dual 4-channel analogue multiplexer/demultiplexer

HEF4052B MSI

DESCRIPTION

The HEF4052B is a dual 4-channel analogue multiplexer/demultiplexer with common channel select logic. Each multiplexer/demultiplexer has four independent inputs/outputs (Y_0 to Y_3) and a common input/output (Z). The common channel select logic includes two address inputs (A_0 and A_1) and an active LOW enable input ($\overline{E}$).

Both multiplexers/demultiplexers contain four bidirectional analogue switches, each with one side connected to an independent input/output (Y_0 to Y_3) and the other side connected to a common input/output (Z).

With $\overline{E}$ LOW, one of the four switches is selected (low impedance ON-state) by A_0 and A_1. With $\overline{E}$ HIGH, all switches are in the high impedance OFF-state, independent of A_0 and A_1.

V_{DD} and V_{SS} are the supply voltage connections for the digital control inputs (A_0, A_1 and $\overline{E}$). The V_{DD} to V_{SS} range is 3 to 15 V. The analogue inputs/outputs (Y_0 to Y_3, and Z) can swing between V_{DD} as a positive limit and V_{EE} as a negative limit. $V_{DD} - V_{EE}$ may not exceed 15 V.

For operation as a digital multiplexer/demultiplexer, V_{EE} is connected to V_{SS} (typically ground).

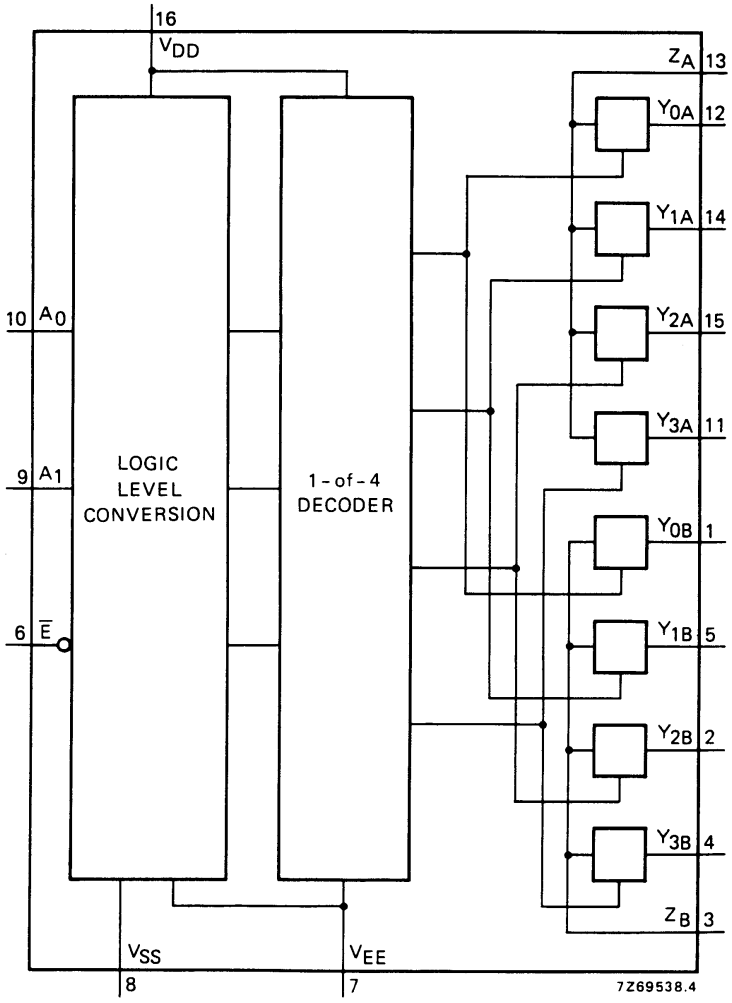

Fig.1 Functional diagram.

PINNING

Y_{0A} to Y_{3A}	independent inputs/outputs
Y_{0B} to Y_{3B}	independent inputs/outputs
A_0, A_1	address inputs
$\overline{E}$	enable input (active LOW)
Z_A, Z_B	common inputs/outputs

FAMILY DATA, I_{DD} LIMITS category MSI

See Family Specifications

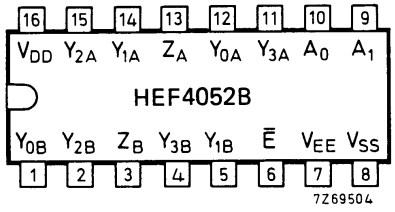

Fig.2 Pinning diagram.

HEF4052BP(N): 16-lead DIL; plastic (SOT38-1)

HEF4052BD(F): 16-lead DIL; ceramic (cerdip) (SOT74)

HEF4052BT(D): 16-lead SO; plastic (SOT109-1)

( ): Package Designator North America

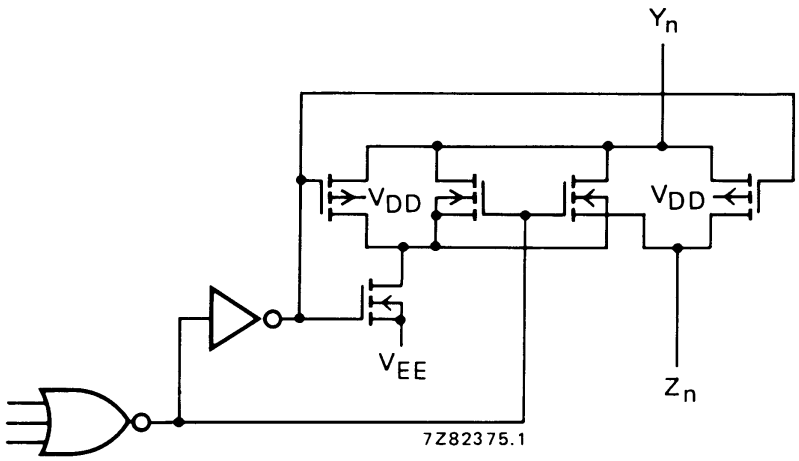

Fig.3 Schematic diagram (one switch).

FUNCTION TABLE

INPUTS			CHANNEL ON
$\overline{E}$	A_1	A_0	
L	L	L	Y_{0A}–Z_A; Y_{0B}–Z_B
L	L	H	Y_{1A}–Z_A; Y_{1B}–Z_B
L	H	L	Y_{2A}–Z_A; Y_{2B}–Z_B
L	H	H	Y_{3A}–Z_A; Y_{3B}–Z_B
H	X	X	none

Notes

1. H = HIGH state (the more positive voltage)
   L = LOW state (the less positive voltage)
   X = state is immaterial

RATINGS

Limiting values in accordance with the Absolute Maximum System (IEC 134)

Supply voltage (with reference to V_{DD})	V_{EE}	–18 to + 0,5 V

Note

1. To avoid drawing V_{DD} current out of terminal Z, when switch current flows into terminals Y, the voltage drop across the bidirectional switch must not exceed 0,4 V. If the switch current flows into terminal Z, no V_{DD} current will flow out of terminals Y, in this case there is no limit for the voltage drop across the switch, but the voltages at Y and Z may not exceed V_{DD} or V_{EE}.

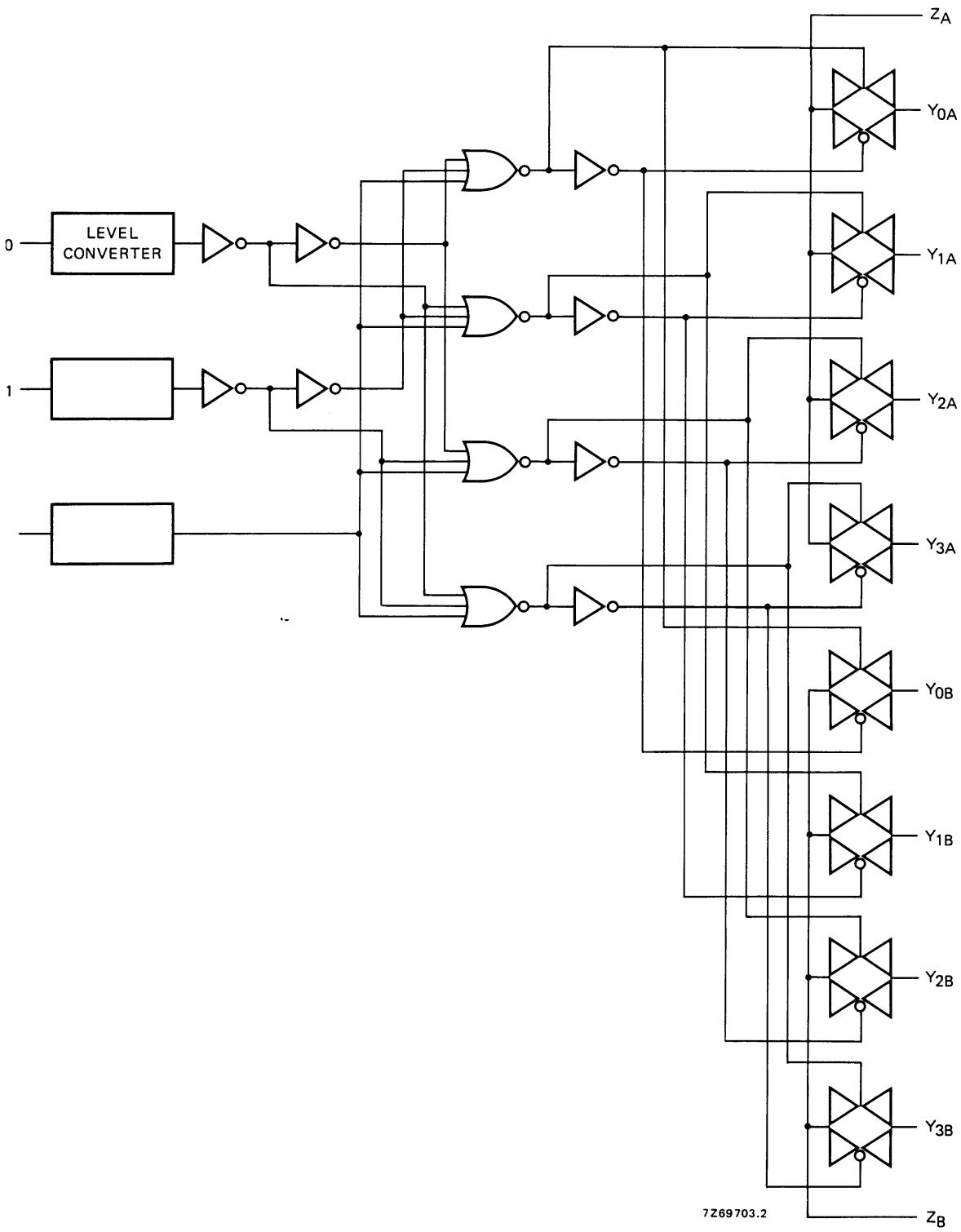

Fig.4 Logic diagram.

DC CHARACTERISTICS

T_{amb} = 25 °C

	V_{DD}–V_{EE} V	SYMBOL	TYP.	MAX.		CONDITIONS
ON resistance	5	R_{ON}	350	2500	Ω	V_{is} = 0 to V_{DD}–V_{EE} see Fig.6
	10		80	245	Ω	
	15		60	175	Ω	
ON resistance	5	R_{ON}	115	340	Ω	V_{is} = 0 see Fig.6
	10		50	160	Ω	
	15		40	115	Ω	
ON resistance	5	R_{ON}	120	365	Ω	V_{is} = V_{DD}–V_{EE} see Fig.6
	10		65	200	Ω	
	15		50	155	Ω	
‘Δ’ ON resistance	5	ΔR_{ON}	25	–	Ω	V_{is} = 0 to V_{DD}–V_{EE} see Fig.6
between any two	10		10	–	Ω	
channels	15		5	–	Ω	
OFF-state leakage	5	I_{OZZ}	–	–	nA	$\overline{E}$ at V_{DD}
current, all	10		–	–	nA	
channels OFF	15		–	1000	nA	
OFF-state leakage	5	I_{OZY}	–	–	nA	$\overline{E}$ at V_{SS}
current, any	10		–	–	nA	
channel	15		–	200	nA	

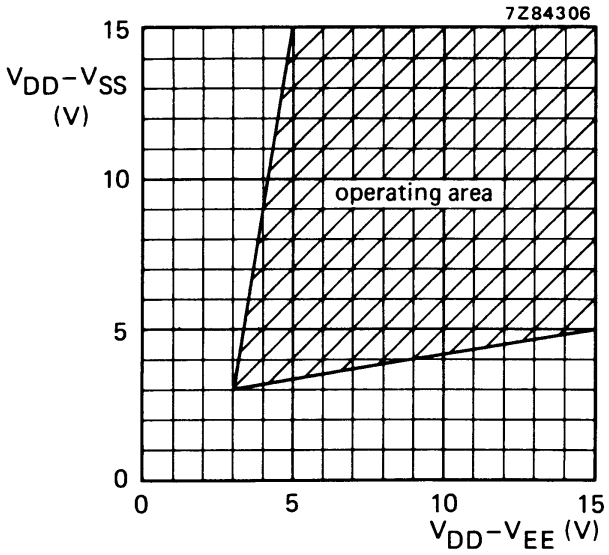

Fig.5 Operating area as a function of the supply voltages.

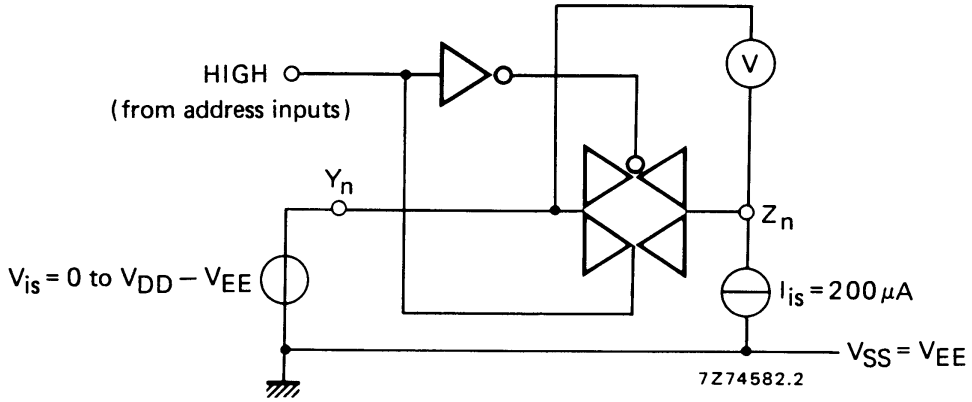

Fig.6 Test set-up for measuring R_{ON}.

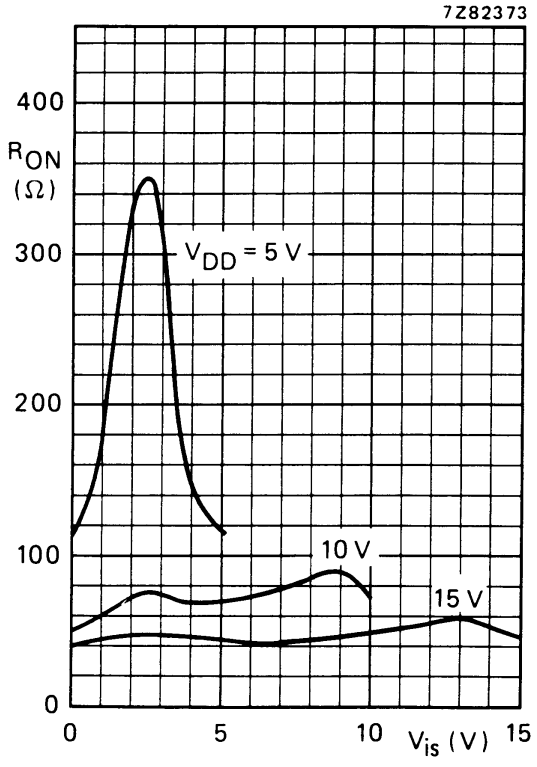

I_{is} = 200 μA
V_{SS} = V_{EE} = 0 V

Fig.7 Typical R_{ON} as a function of input voltage.

AC CHARACTERISTICS

$V_{EE} = V_{SS} = 0$ V; $T_{amb} = 25$ °C; input transition times ≤ 20 ns

	V_{DD} V	TYPICAL FORMULA FOR P (μW)	
Dynamic power dissipation per package (P)	5	$1\,300\ f_i + \sum(f_oC_L) \times V_{DD}^2$	where f_i = input freq. (MHz) f_o = output freq. (MHz) C_L = load capacitance (pF) $\sum(f_oC_L)$ = sum of outputs V_{DD} = supply voltage (V)
	10	$6\,100\ f_i + \sum(f_oC_L) \times V_{DD}^2$	
	15	$15\,600\ f_i + \sum(f_oC_L) \times V_{DD}^2$	

AC CHARACTERISTICS

$V_{EE} = V_{SS} = 0$ V; $T_{amb} = 25$ °C; input transition times ≤ 20 ns

	V_{DD} V	SYMBOL	TYP.	MAX.		
Propagation delays						
$V_{is} \rightarrow V_{os}$	5		10	20	ns	
HIGH to LOW	10	t_{PHL}	5	10	ns	note 1
	15		5	10	ns	
	5		10	20	ns	
LOW to HIGH	10	t_{PLH}	5	10	ns	note 1
	15		5	10	ns	
$A_n \rightarrow V_{os}$	5		150	305	ns	
HIGH to LOW	10	t_{PHL}	65	135	ns	note 2
	15		50	100	ns	
	5		150	300	ns	
LOW to HIGH	10	t_{PLH}	75	150	ns	note 2
	15		50	100	ns	
Output disable times						
$\overline{E} \rightarrow V_{os}$	5		95	190	ns	
HIGH	10	t_{PHZ}	90	180	ns	note 3
	15		90	180	ns	
	5		100	205	ns	
LOW	10	t_{PLZ}	90	180	ns	note 3
	15		90	180	ns	
Output enable times						
$\overline{E} \rightarrow V_{os}$	5		130	260	ns	
HIGH	10	t_{PZH}	55	115	ns	note 3
	15		45	85	ns	
	5		120	240	ns	
LOW	10	t_{PZL}	50	100	ns	note 3
	15		35	75	ns	

	V_{DD} V	SYMBOL	TYP.	MAX.	
Distortion, sine-wave	5		0,25	%	
response	10		0,04	%	note 4
	15		0,04	%	
Crosstalk between	5		–	MHz	
any two channels	10		1	MHz	note 5
	15		–	MHz	
Crosstalk; enable	5		–	mV	
or address input	10		50	mV	note 6
to output	15		–	mV	
OFF-state	5		–	MHz	
feed-through	10		1	MHz	note 7
	15		–	MHz	
ON-state frequency	5		13	MHz	
response	10		40	MHz	note 8
	15		70	MHz	

Notes

V_{is} is the input voltage at a Y or Z terminal, whichever is assigned as input.

V_{os} is the output voltage at a Y or Z terminal, whichever is assigned as output.

1. R_L = 10 kΩ to V_{EE}; C_L = 50 pF to V_{EE}; $\overline{E}$ = V_{SS}; V_{is} = V_{DD} (square-wave); see Fig.8.
2. R_L = 10 kΩ; C_L = 50 pF to V_{EE}; $\overline{E}$ = V_{SS}; A_n = V_{DD} (square-wave); V_{is} = V_{DD} and R_L to V_{EE} for t_{PLH}; V_{is} = V_{EE} and R_L to V_{DD} for t_{PHL}; see Fig.8.
3. R_L = 10 kΩ; C_L = 50 pF to V_{EE}; $\overline{E}$ = V_{DD} (square-wave);
   V_{is} = V_{DD} and R_L to V_{EE} for t_{PHZ} and t_{PZH};
   V_{is} = V_{EE} and R_L to V_{DD} for t_{PLZ} and t_{PZL}; see Fig.8.
4. R_L = 10 kΩ; C_L = 15 pF; channel ON; V_{is} = ½ $V_{DD\ (p\text{-}p)}$ (sine-wave, symmetrical about ½ V_{DD}); f_{is} = 1 kHz; see Fig.9.
5. R_L = 1 kΩ; V_{is} = ½ $V_{DD\ (p\text{-}p)}$ (sine-wave, symmetrical about ½ V_{DD});

   $$20 \log \frac{V_{os}}{V_{is}} = -50 \text{ dB}$$; see Fig. 10.

6. R_L = 10 kΩ to V_{EE}; C_L = 15 pF to V_{EE}; $\overline{E}$ or A_n = V_{DD} (square-wave); crosstalk is $|V_{os}|$ (peak value); see Fig.8.
7. R_L = 1 kΩ; C_L = 5 pF; channel OFF; V_{is} = ½ $V_{DD\ (p\text{-}p)}$ (sine-wave, symmetrical about ½ V_{DD});

   $$20 \log \frac{V_{os}}{V_{is}} = -50 \text{ dB}$$; see Fig. 9.

8. R_L = 1 kΩ; C_L = 5 pF; channel ON; V_{is} = ½ $V_{DD\ (p\text{-}p)}$ (sine-wave, symmetrical about ½ V_{DD});

   $$20 \log \frac{V_{os}}{V_{is}} = -3 \text{ dB}$$; see Fig. 9.

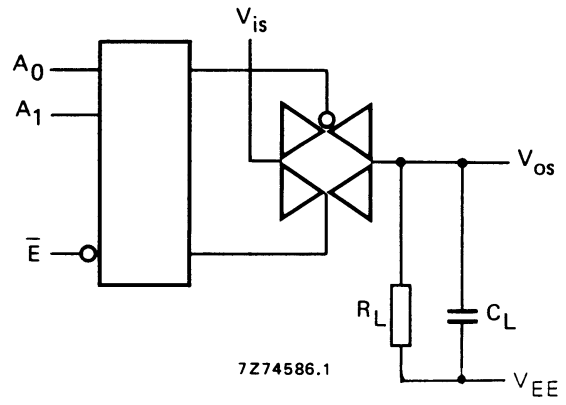

Fig.8

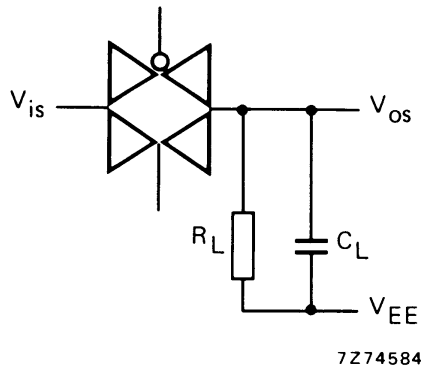

Fig.9

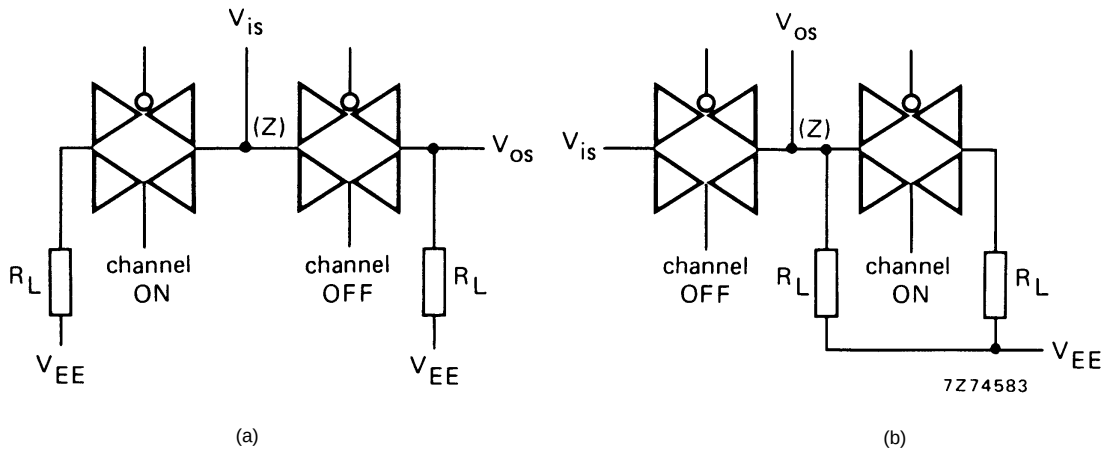

Fig.10

APPLICATION INFORMATION

Some examples of applications for the HEF4052B are:

- Analogue multiplexing and demultiplexing.
- Digital multiplexing and demultiplexing.
- Signal gating.

NOTE

If break before make is needed, then it is necessary to use the enable input.

This datasheet has been download from:

www.datasheetcatalog.com

Datasheets for electronics components.

ENTEGRECİ

Bu belge www.entegreci.com üzerinden sunulmaktadır.

Elektronik komponent tedarikinde Entegreci

Entegreci, Eskişehir merkezli, Türkiye geneline satış yapan bir elektronik komponent mağazasıdır. Entegreler (IC), mikrodenetleyiciler, transistörler, diyotlar, pasif elemanlar, konnektörler, modüller ve geliştirme kartları tek adetten seri üretim adetlerine kadar satılır. Ürün sayfalarında güncel stok durumunu, fiyatı ve datasheet bağlantısını bulabilirsiniz.

Parça koduyla arama

Üretici parça numarasını yazın; stok ve fiyatı hemen görün.

www.entegreci.com

Ürün kategorileri

Entegreden kapasitöre tüm elektronik komponent kategorileri.

Kategorilere göz atın

Üreticiler

Aradığınız üreticinin ürünlerini tek sayfada inceleyin.

Üreticileri görün

Toplu alım ve teklif

Listede olmayan ya da yüksek adetli parçalar için teklif isteyin.

Teklif isteyin

www.entegreci.com | **destek@entegreci.com** | **0850 305 90 34**

Entegreci is an online electronic components store based in Türkiye. Search by manufacturer part number to see stock, prices and datasheets for integrated circuits, microcontrollers, transistors, passive components and connectors, or request a quote for parts that are not listed.

Bu sayfa Entegreci tarafından eklenmiştir. Belgenin önceki sayfaları asıl yayıncısına aittir ve içeriği değiştirilmemiştir; en güncel sürüm için belgenin yayıncısına başvurun.