HCF4066B

QUAD BILATERAL SWITCH FOR TRANSMISSION OR MULTIPLEXING OF ANALOG OR DIGITAL SIGNALS

- 15V DIGITAL OR ± 7.5V PEAK TO PEAK SWITCHING
- 125Ω TYPICAL ON RESISTANCE FOR 15V OPERATION
- SWITCH ON RESISTANCE MATCHED TO WITHIN 5Ω TYP. OVER 15V SIGNAL INPUT RANGE
- ON RESISTANCE FLAT OVER FULL PEAK TO PEAK SIGNAL RANGE
- HIGH ON/OFF OUTPUT VOLTAGE RATIO : 65dB TYP. at f_{IS} = 10KHz, R_L = 10KΩ
- HIGH DEGREE OF LINEARITY : < 0.5% DISTORTION TYP. at f_{IS} = 1KHz, V_{IS} = 5 V_{pp}, V_{DD} - V_{SS} ≥ 10V, RL = 10KΩ
- EXTREMELY LOW OFF SWITCH LEAKAGE RESULTING IN VERY LOW OFFSET CURRENT AND HIGH EFFECTIVE OFF RESISTANCE : 10pA TYP. at V_{DD} - V_{SS} = 10V, T_{amb} = 25°C
- EXTREMELY HIGH CONTROL INPUT IMPEDANCE (control circuit isolated from signal circuit 10^{12}Ω typ.)
- LOW CROSSTALK BETWEEN SWITCHES : 50dB Typ. at f_{IS} = 0.9MHz, R_L = 1KΩ
- MATCHED CONTROL - INPUT TO SIGNAL OUTPUT CAPACITANCE : REDUCES OUTPUT SIGNAL TRANSIENTS
- FREQUENCY RESPONSE SWITCH ON : 40MHz (Typ.)
- QUIESCENT CURRENT SPECIF. UP TO 20V
- 5V, 10V AND 15V PARAMETRIC RATINGS

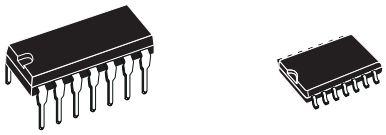

DIP SOP

ORDER CODES

PACKAGE	TUBE	T & R
DIP	HCF4066BEY	
SOP	HCF4066BM1	HCF4066M013TR

- INPUT LEAKAGE CURRENT I_I = 100nA (MAX) AT V_{DD} = 18V T_A = 25°C
- 100% TESTED FOR QUIESCENT CURRENT
- MEETS ALL REQUIREMENTS OF JEDEC JESD13B " STANDARD SPECIFICATIONS FOR DESCRIPTION OF B SERIES CMOS DEVICES"

DESCRIPTION

The HCF4066B is a monolithic integrated circuit fabricated in Metal Oxide Semiconductor technology available in DIP and SOP packages.
The HCF4066B is a QUAD BILATERAL SWITCH intended for the transmission or multiplexing of analog or digital signals.
It is pin for pin compatible with HCF4016B, but exhibits a much lower ON resistance. In addition,

PIN CONNECTION

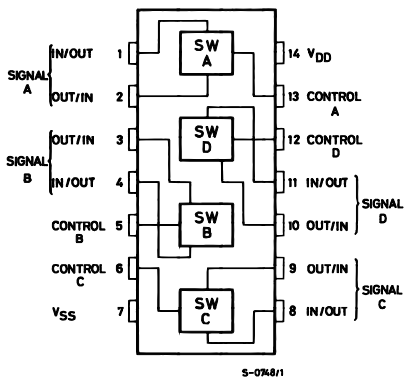

the ON resistance is relatively constant over the full input signal range. The HCF4066B consists of four independent bilateral switches. A single control signal is required per switch. Both the p and n device in a given switch are biased ON or OFF simultaneously by the control signal. As shown in schematic diagram , the well of the n-channel device on each switch is either tied to the input when the switch is ON or to V_{SS} when the switch is OFF. This configuration eliminates the variation of the switch-transistor threshold voltage with input signal, and thus keeps the ON resistance low over the full operating signal range. The advantages over single channel switches include peak input signal voltage swings equal to the full supply voltage, and more constant ON impedance over the input signal range. For sample and hold applications, however, the HCF4016B is recommended.

INPUT EQUIVALENT CIRCUIT

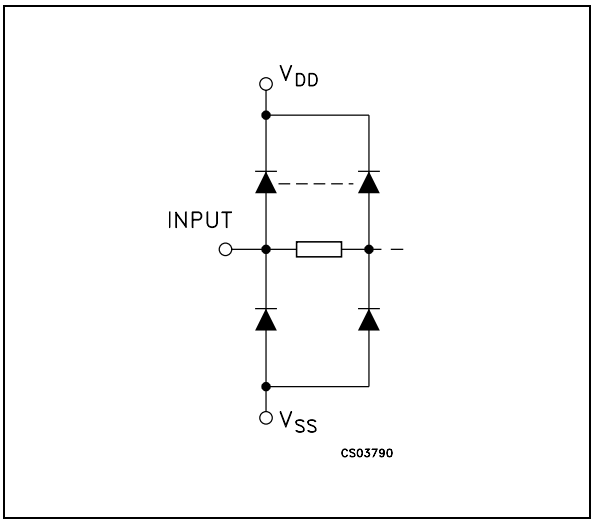

PIN DESCRIPTION

PIN No	SYMBOL	NAME AND FUNCTION
1, 4, 8, 11	A to D I/O	Independent Inputs/Outputs
2, 3, 9, 10	A to D O/I	Independent Outputs/ Inputs
13, 5, 6, 12	CONTROL A to D	Enable Inputs
7	V_{SS}	Negative Supply Voltage
14	V_{DD}	Positive Supply Voltage

TRUTH TABLE

CONTROL	SWITCH FUNCTION
H	ON
L	OFF

SCHEMATIC DIAGRAM (1 OF 4 IDENTICAL SWITCHES AND ITS ASSOCIATED CONTROL CIRCUITY)

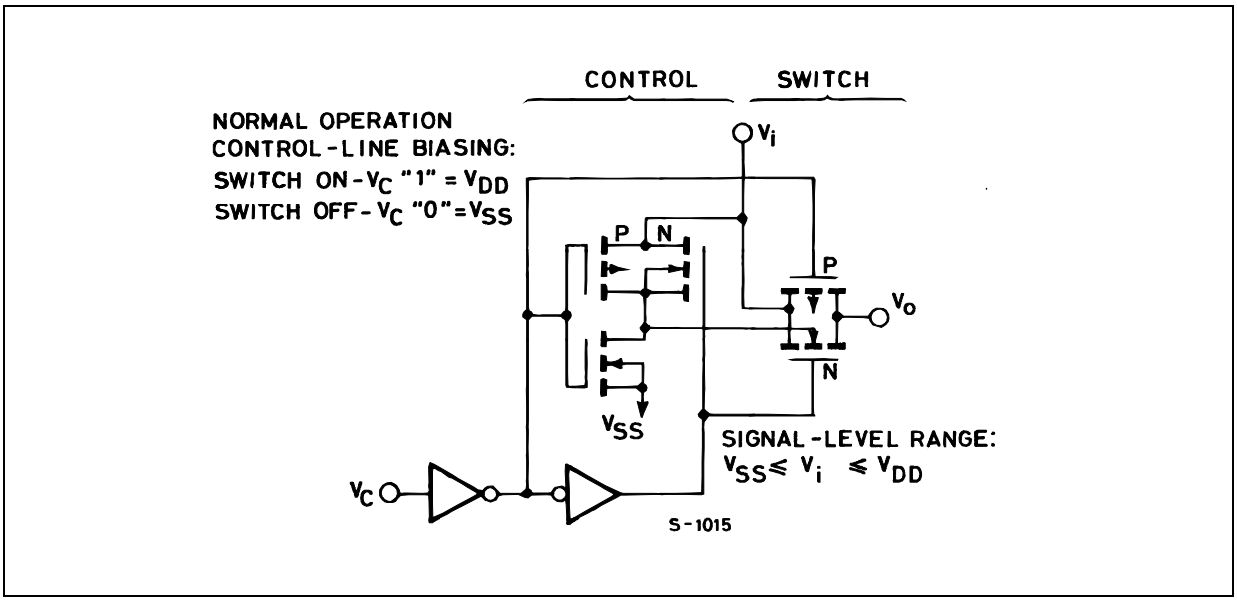

ABSOLUTE MAXIMUM RATINGS

Symbol	Parameter	Value	Unit
V_{DD}	Supply Voltage	-0.5 to +22	V
V_I	DC Input Voltage	-0.5 to V_{DD} + 0.5	V
I_I	DC Input Current	± 10	mA
P_D	Power Dissipation per Package	200	mW
	Power Dissipation per Output Transistor	100	mW
T_{op}	Operating Temperature	-55 to +125	°C
T_{stg}	Storage Temperature	-65 to +150	°C

Absolute Maximum Ratings are those values beyond which damage to the device may occur. Functional operation under these conditions is not implied.
All voltage values are referred to V_{SS} pin voltage.

RECOMMENDED OPERATING CONDITIONS

Symbol	Parameter	Value	Unit
V_{DD}	Supply Voltage	3 to 20	V
V_I	Input Voltage	0 to V_{DD}	V
T_{op}	Operating Temperature	-55 to 125	°C

ELECTRICAL CHARACTERISTICS

(T_{amb} = 25°C,Typical temperature coefficient for all V_{DD} value is 0.3 %/°C)

Symbol	Parameter	Test Condition			Value							Unit
			V_I (V)	V_{DD} (V)	T_A = 25°C			-40 to 85°C		-55 to 125°C		
					Min.	Typ.	Max.	Min.	Max.	Min.	Max.	
I_L	Quiescent Device Current (all switches ON or all switches OFF)		0/5	5		0.01	0.25		7.5		7.5	µA
			0/10	10		0.01	0.5		15		15	
			0/15	15		0.01	1		30		30	
			0/20	20		0.02	5		150		150	
SIGNAL INPUTS (V_{IS}) and OUTPUTS (V_{OS})												
R_{ON}	Resistance	V_C=V_{DD} R_L = 10KΩ Return to (V_{DD}-V_{SS})/2 V_{IS} = V_{SS} to V_{DD}		5		470	1050		1200		1200	Ω
				10		180	400		500		500	
				15		125	240		300		300	
Δ_{ON}	Resistance Δ_{RON} (between any 2 of 4 switches)	R_L = 10KΩ, V_C = V_{DD}		5		5						Ω
				10		10						
				15		15						
TDH	Total Harmonic Distortion	V_C = V_{DD} = 5V, V_{SS} = -5V V_{IS} (p-p) = 5V, R_L = 10KΩ (sine wave centered in 0V) f_{IS} = 1KHz sine wave				0.4						%
	-3dB Cutoff Frequency (Switch on)	V_C = V_{DD} = 5V, V_{SS} = -5V V_{IS} (p-p) = 5V, R_L = 1KΩ (sine wave centered in 0V)				40						MHz
	-50dB Feedthrough Frequency (switch off)	V_C = V_{SS} = -5V V_{IS} (p-p) = 5V, R_L = 1KΩ (sine wave centered in 0V)				1						MHz

Symbol	Parameter	Test Condition	V_I (V)	V_{DD} (V)	Value							Unit
					T_A = 25°C			-40 to 85°C		-55 to 125°C		
					Min.	Typ.	Max.	Min.	Max.	Min.	Max.	
	-50dB Crosstalk Frequency	$V_{C(A)} = V_{DD} = +5V$ $V_{C(B)} = V_{SS} = -5V$ $V_{IS(A)} = 5V$ (p-p) 50Ω source, R_L = 1KΩ				8						MHz
t_{pd}	Propagation Delay Time (signal input to output)	R_L = 200KΩ, $V_C = V_{DD}$ V_{SS} = GND, C_L = 50pF V_{IS}= 10V square wave centered on 5V t_r, t_f = 20ns				20	40					ns
						10	20					
						7	15					
C_{IS}	Input Capacitance	$V_C = V_{SS}$ = -5		+5		8						pF
C_{OS}	Output Capacitance					8						
C_{IOS}	Feedthrough					0.5						
	Input/Output Leakage Current Switch OFF	V_C = 0V V_{IS} = 18V, V_{OS} = 0V V_{IS} = 0V, V_{OS} = 18V		18		$\pm 10^{-3}$	±0.1		±1		±1	µA
CONTROL (V_C)												
V_{ILC}	Control Input Low Voltage	$\lvert I_{IS} \rvert$ < 10 µA $V_{IS} = V_{SS}$, $V_{OS} = V_{DD}$ and $V_{IS} = V_{DD}$, $V_{OS} = V_{SS}$		5			1		1		1	V
				10			2		2		2	
				15			2		2		2	
V_{IHC}	Control Input High Voltage			5	3.5			3.5		3.5		V
				10	7			7		7		
				15	11			11		11		
I_I	Input Leakage Current	$V_{IS} \le V_{DD}$ $V_{DD} - V_{SS}$ = 18V		18		$\pm 10^{-5}$	±0.1		±1		±1	µA
	Crosstalk (control input to signal output)	V_C = 10V (sq. wave) t_r, t_f = 20ns R_L = 10KΩ		10		50						mV
	Turn - On Propagation Delay Time	$V_{IN} = V_{DD}$, t_r, t_f = 20ns C_L = 50pF, R_L = 1KΩ		5		35	70					ns
				10		20	40					
				15		15	30					
	Control Input Repetition Rate	$V_{IS}=V_{DD}$, V_{SS}=GND R_L = 1KΩ to GND C_L = 50pF, V_C = 10V sq. wave center on 5V t_r, t_f = 20ns V_{OS}=1/2V_{OS} at 1KHz		5		6						MHz
				10		9						
				15		9.5						
C_I	Input Capacitance	Any Input				5	7.5					pF

TYPICAL APPLICATIONS (BIDIRECTIONAL SIGNAL TRANSMISSION VIA DIGITAL CONTROL LOGIC)

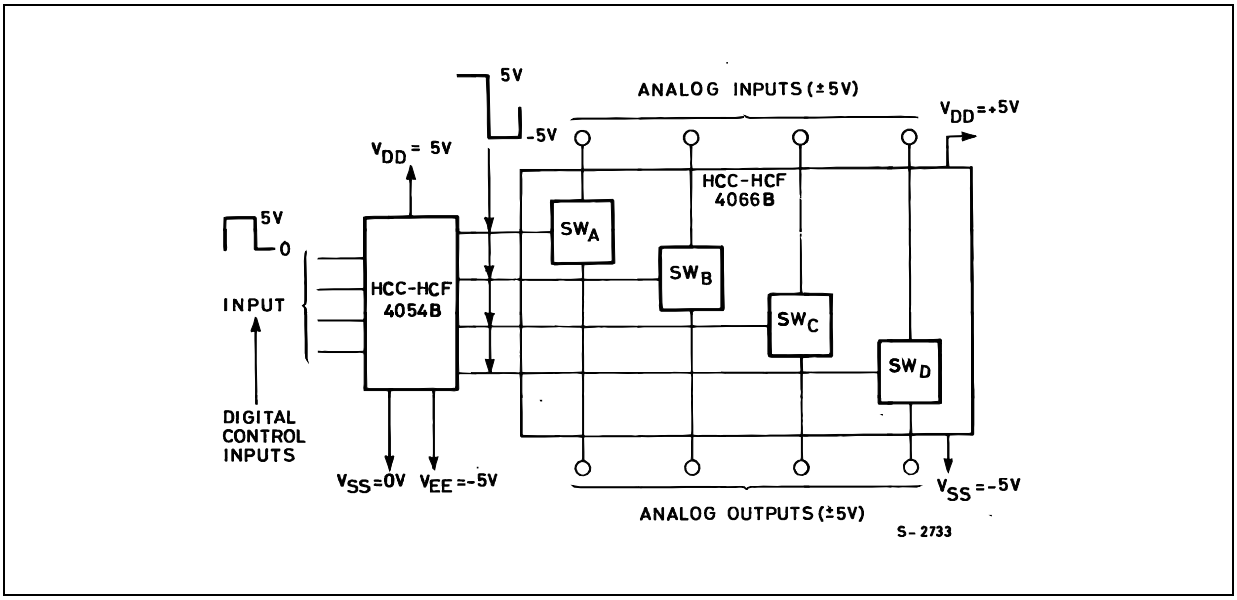

TYPICAL APPLICATIONS (4-CHANNEL PAM MULTIPLEXER SYSTEM DIAGRAM)

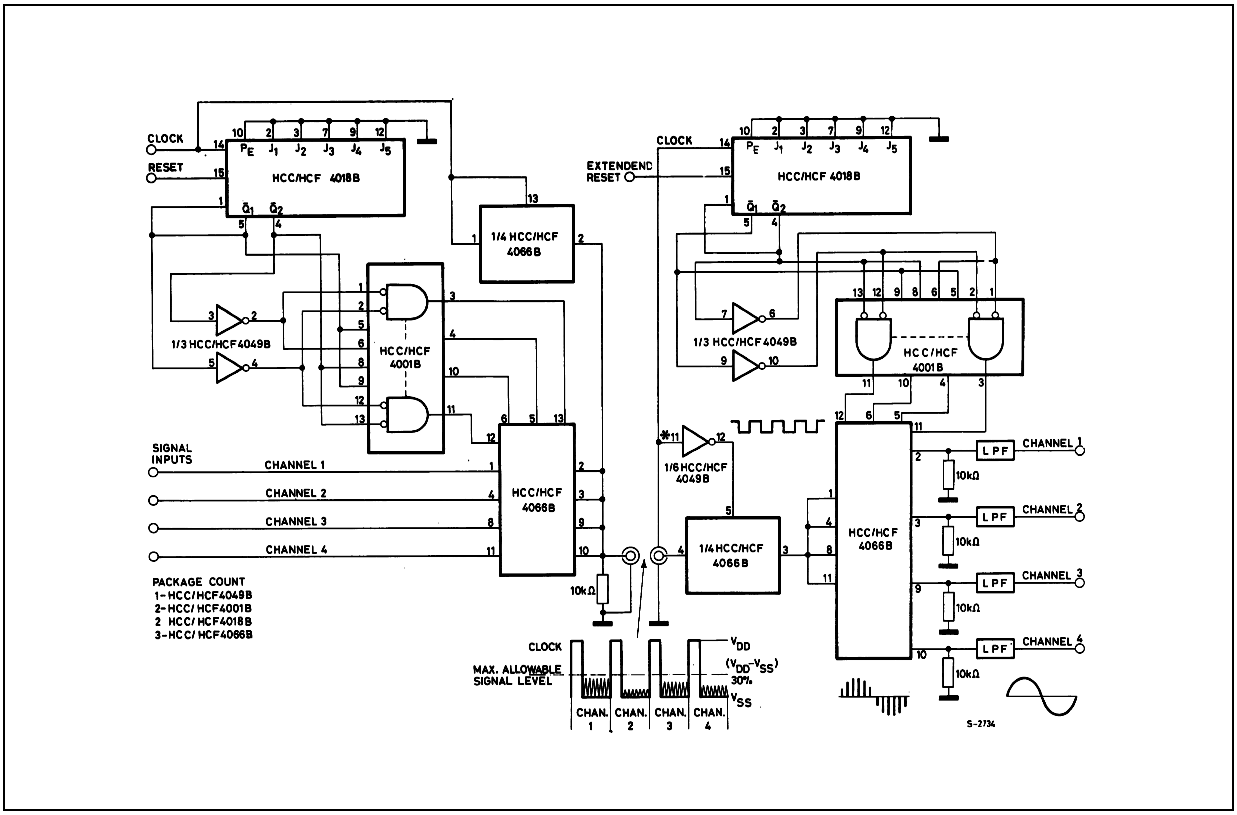

TEST CIRCUIT

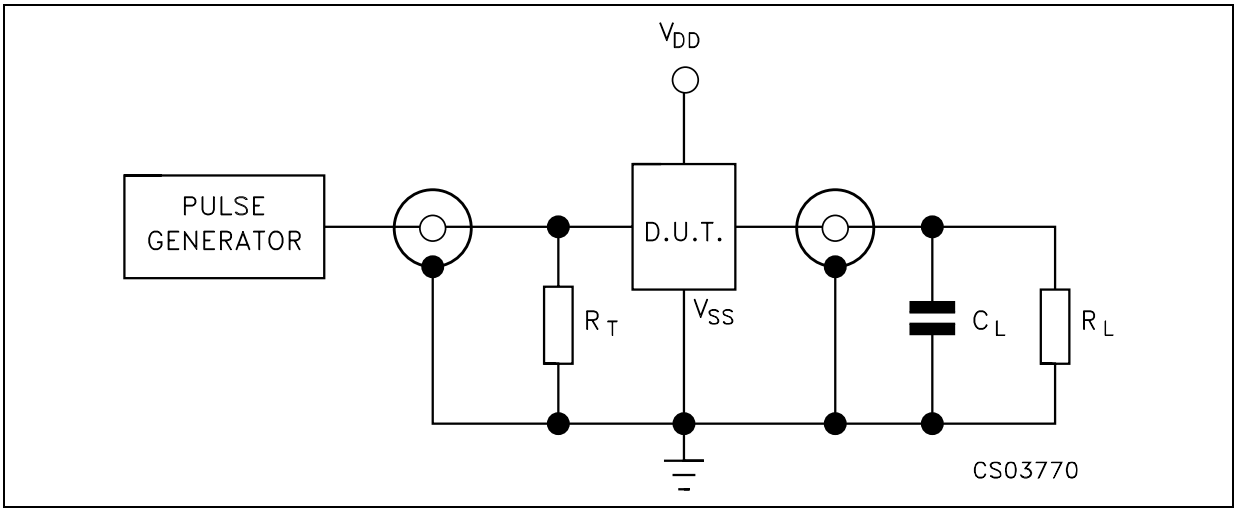

C_L = 50pF or equivalent (includes jig and probe capacitance)
R_L = 200KΩ
R_T = Z_{OUT} of pulse generator (typically 50Ω)

WAVEFORM : PROPAGATION DELAY TIMES (f=1MHz; 50% duty cycle)

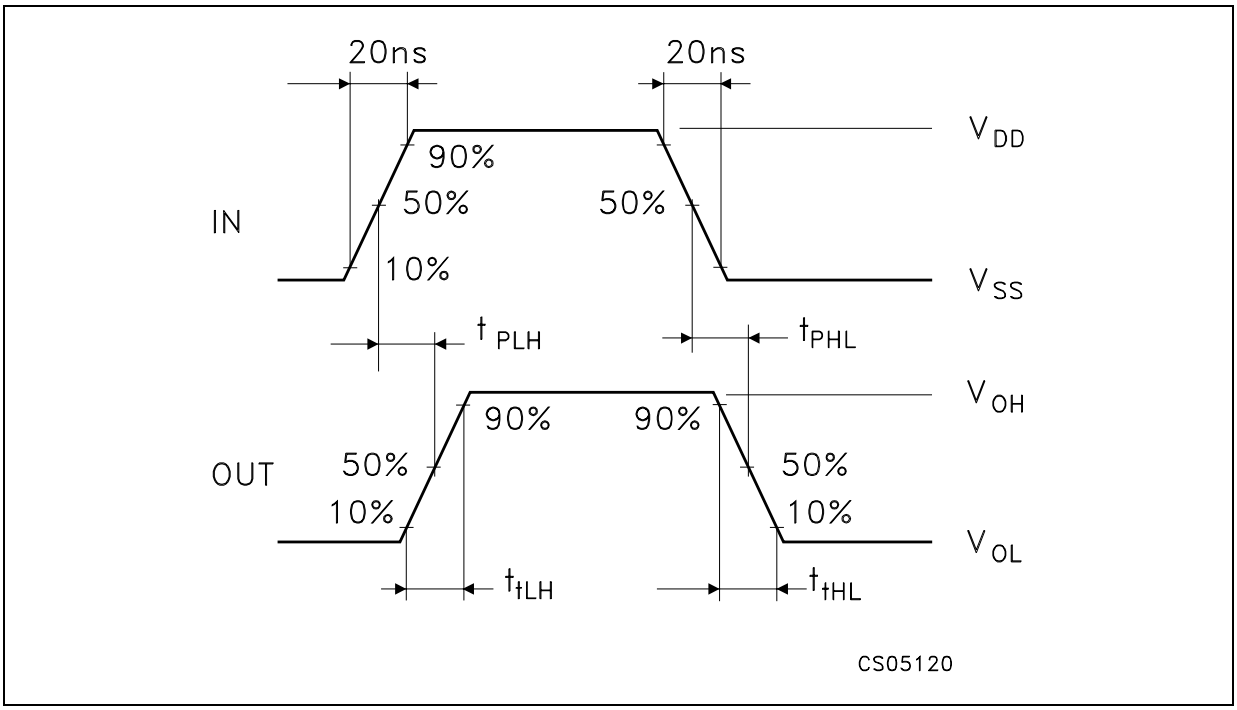

Plastic DIP-14 MECHANICAL DATA

DIM.	mm.			inch		
	MIN.	TYP	MAX.	MIN.	TYP.	MAX.
a1	0.51			0.020		
B	1.39		1.65	0.055		0.065
b		0.5			0.020	
b1		0.25			0.010	
D			20			0.787
E		8.5			0.335	
e		2.54			0.100	
e3		15.24			0.600	
F			7.1			0.280
I			5.1			0.201
L		3.3			0.130	
Z	1.27		2.54	0.050		0.100

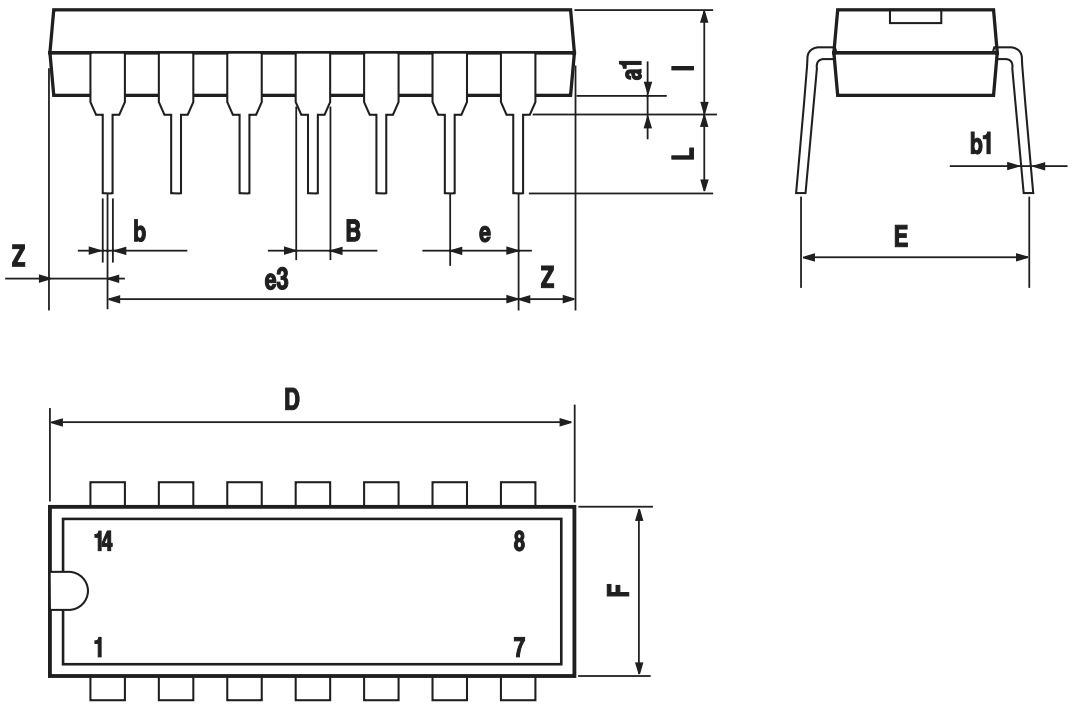

P001A

SO-14 MECHANICAL DATA

DIM.	mm.			inch		
	MIN.	TYP	MAX.	MIN.	TYP.	MAX.
A			1.75			0.068
a1	0.1		0.2	0.003		0.007
a2			1.65			0.064
b	0.35		0.46	0.013		0.018
b1	0.19		0.25	0.007		0.010
C		0.5			0.019	
c1	45° (typ.)					
D	8.55		8.75	0.336		0.344
E	5.8		6.2	0.228		0.244
e		1.27			0.050	
e3		7.62			0.300	
F	3.8		4.0	0.149		0.157
G	4.6		5.3	0.181		0.208
L	0.5		1.27	0.019		0.050
M			0.68			0.026
S	8° (max.)					

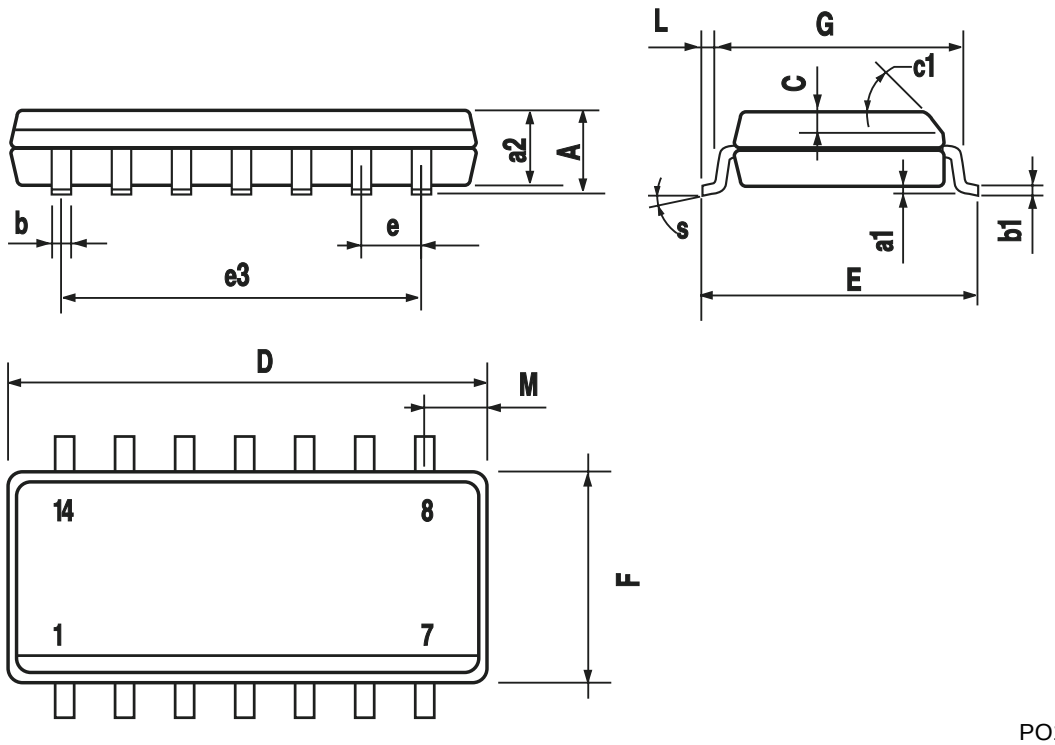

PO13G

Information furnished is believed to be accurate and reliable. However, STMicroelectronics assumes no responsibility for the consequences of use of such information nor for any infringement of patents or other rights of third parties which may result from its use. No license is granted by implication or otherwise under any patent or patent rights of STMicroelectronics. Specifications mentioned in this publication are subject to change without notice. This publication supersedes and replaces all information previously supplied. STMicroelectronics products are not authorized for use as critical components in life support devices or systems without express written approval of STMicroelectronics.

© The ST logo is a registered trademark of STMicroelectronics

© 2001 STMicroelectronics - Printed in Italy - All Rights Reserved
STMicroelectronics GROUP OF COMPANIES
Australia - Brazil - China - Finland - France - Germany - Hong Kong - India - Italy - Japan - Malaysia - Malta - Morocco
Singapore - Spain - Sweden - Switzerland - United Kingdom
© http://www.st.com

ENTEGRECİ

Bu belge www.entegreci.com üzerinden sunulmaktadır.

Elektronik komponent tedarikinde Entegreci

Entegreci, Eskişehir merkezli, Türkiye geneline satış yapan bir elektronik komponent mağazasıdır. Entegreler (IC), mikrodenetleyiciler, transistörler, diyotlar, pasif elemanlar, konnektörler, modüller ve geliştirme kartları tek adetten seri üretim adetlerine kadar satılır. Ürün sayfalarında güncel stok durumunu, fiyatı ve datasheet bağlantısını bulabilirsiniz.

Parça koduyla arama

Üretici parça numarasını yazın; stok ve fiyatı hemen görün.

www.entegreci.com

Ürün kategorileri

Entegreden kapasitöre tüm elektronik komponent kategorileri.

Kategorilere göz atın

Üreticiler

Aradığınız üreticinin ürünlerini tek sayfada inceleyin.

Üreticileri görün

Toplu alım ve teklif

Listede olmayan ya da yüksek adetli parçalar için teklif isteyin.

Teklif isteyin

www.entegreci.com | **destek@entegreci.com** | **0850 305 90 34**

Entegreci is an online electronic components store based in Türkiye. Search by manufacturer part number to see stock, prices and datasheets for integrated circuits, microcontrollers, transistors, passive components and connectors, or request a quote for parts that are not listed.

Bu sayfa Entegreci tarafından eklenmiştir. Belgenin önceki sayfaları asıl yayıncısına aittir ve içeriği değiştirilmemiştir; en güncel sürüm için belgenin yayıncısına başvurun.