HCF4049UB

HEX BUFFER/CONVERTER (INVERTING)

- PROPAGATION DELAY TIME:
  t_{PD} = 40ns (TYP.) at V_{DD} = 10V C_L = 50pF
- HIGH TO LOW LEVEL LOGIC CONVERSION
- HIGH "SINK" AND "SOURCE" CURRENT CAPABILITY
- QUIESCENT CURRENT SPECIFIED UP TO 20V
- 5V, 10V AND 15V PARAMETRIC RATINGS
- INPUT LEAKAGE CURRENT
  I_I = 100nA (MAX) AT V_{DD} = 18V T_A = 25°C
- 100% TESTED FOR QUIESCENT CURRENT

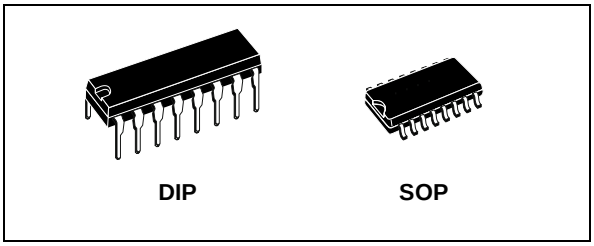

DIP SOP

ORDER CODES

PACKAGE	TUBE	T & R
DIP	HCF4049UBEY	
SOP	HCF4049UBM1	HCF4049UM013TR

DESCRIPTION

The HCF4049UB is a monolithic integrated circuit fabricated in Metal Oxide Semiconductor technology available in DIP and SOP packages.
It is an inverting Hex Buffer/Converter and feature logic level conversions using only one supply voltage (V_{DD}).
The input high level signal (V_{IH}) can exceed the V_{DD} supply voltage when these devices are used for logic level conversions. This device is intended for use as CMOS to DTL/TTL converters and can drive directly two DTL/TTL loads (V_{DD} = 5V, $V_{OL} \leq$ 0.4V and $I_{OL} \leq$ 3.2mA.

PIN CONNECTION

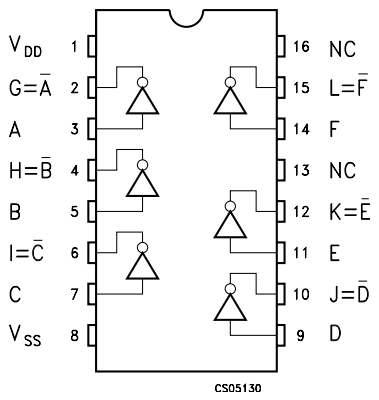

INPUT EQUIVALENT CIRCUIT

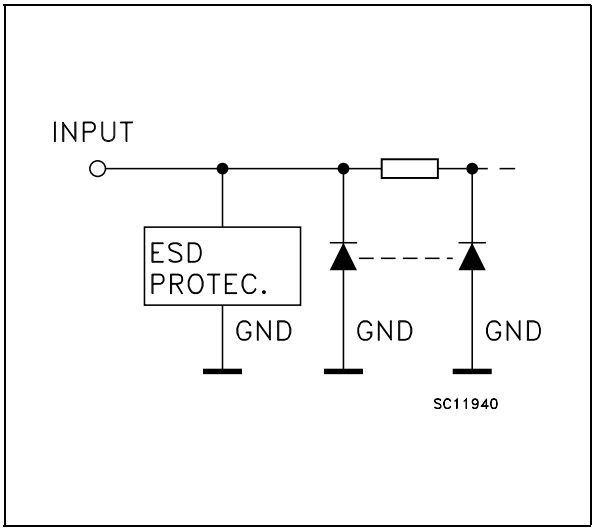

PIN DESCRIPTION

PIN N°	SYMBOL	NAME AND FUNCTION
3, 5, 7, 9, 11, 14	A, B, C, D, E, F	Data Inputs
2, 4, 6, 10, 12, 15	G, H, I, J, K, L	Data Outputs
13, 16	NC	Not Connected
8	V_{SS}	Negative Supply Voltage
1	V_{DD}	Positive Supply Voltage

TRUTH TABLE

INPUTS	OUTPUTS
A, B, C, D,E, F	**G, H, I, J, K, L**
L	H
H	L

ABSOLUTE MAXIMUM RATINGS

Symbol	Parameter	Value	Unit
V_{DD}	Supply Voltage	-0.5 to +22	V
V_I	DC Input Voltage	-0.5 to +18	V
I_I	DC Input Current	± 10	mA
P_D	Power Dissipation per Package	200	mW
	Power Dissipation per Output Transistor	100	mW
T_{op}	Operating Temperature	-55 to +125	°C
T_{stg}	Storage Temperature	-65 to +150	°C

Absolute Maximum Ratings are those values beyond which damage to the device may occur. Functional operation under these conditions is not implied.
All voltage values are referred to V_{SS} pin voltage.

RECOMMENDED OPERATING CONDITIONS

Symbol	Parameter	Value	Unit
V_{DD}	Supply Voltage	3 to 20	V
V_I	Input Voltage	-0.5 to 15V	V
T_{op}	Operating Temperature	-55 to 125	°C

DC SPECIFICATIONS

Symbol	Parameter	Test Condition				Value							Unit
		V_I (V)	V_O (V)	$\|I_O\|$ (μA)	V_{DD} (V)	T_A = 25°C			-40 to 85°C		-55 to 125°C		
						Min.	Typ.	Max.	Min.	Max.	Min.	Max.	
I_L	Quiescent Current	0/5			5		0.02	1		30		30	μA
		0/10			10		0.02	2		60		60	
		0/15			15		0.02	4		120		120	
		0/20			20		0.04	20		600		600	
V_{OH}	High Level Output Voltage	0/5		<1	5	4.95			4.95		4.95		V
		0/10		<1	10	9.95			9.95		9.95		
		0/15		<1	15	14.95			14.95		14.95		
V_{OL}	Low Level Output Voltage	5/0		<1	5		0.05			0.05		0.05	V
		10/0		<1	10		0.05			0.05		0.05	
		15/0		<1	15		0.05			0.05		0.05	
V_{IH}	High Level Input Voltage		0.5/4.5	<1	5	4			4		4		V
			1/9	<1	10	8			8		8		
			1.5/13.5	<1	15	12			12		12		
V_{IL}	Low Level Input Voltage		4.5/0.5	<1	5			1		1		1	V
			9/1	<1	10			2		2		2	
			13.5/1.5	<1	15			3		3		3	
I_{OH}	Output Drive Current	0/5	2.5	<1	5	-1.25	-6.4		-0.42		-0.42		mA
		0/5	4.6	<1	5	-0.51	-1.6		-0.38		-0.38		
		0/10	9.5	<1	10	-1.25	-3.6		-1		-1		
		0/15	13.5	<1	15	-3.75	-12		-3		-3		
I_{OL}	Output Sink Current	0/5	0.4	<1	5	3.2	6.4		2.6		2.6		mA
		0/10	0.5	<1	10	8	16		6.6		6.6		
		0/15	1.5	<1	15	24	48		19		19		
I_I	Input Leakage Current	0/18	Any Input		18		$\pm 10^{-5}$	±0.1		±1		±1	μA
C_I	Input Capacitance		Any Input				5	7.5					pF

The Noise Margin for both "1" and "0" level is: 1V min. with V_{DD}=5V, 2V min. with V_{DD}=10V, 2.5V min. with V_{DD}=15V

DYNAMIC ELECTRICAL CHARACTERISTICS (T_{amb} = 25°C, C_L = 50pF, R_L = 200KΩ, $t_r = t_f$ = 20 ns)

Symbol	Parameter	Test Condition			Value (*)			Unit
		V_{DD} (V)	V_I (V)		Min.	Typ.	Max.	
t_{TLH}	Output Transition Time	5	5			80	160	ns
		10	10			40	80	
		15	15			30	60	
t_{THL}	Output Transition Time	5	5			30	60	ns
		10	10			20	40	
		15	15			15	30	
t_{PLH}	Propagation Delay Time	5	5			60	120	ns
		10	10			32	65	
		5	10			45	90	
		15	15			25	50	
		5	15			45	90	
t_{PHL}	Propagation Delay Time	5	5			32	65	ns
		10	10			20	40	
		5	10			15	30	
		15	15			15	30	
		5	15			10	20	

(*) Typical temperature coefficient for all V_{DD} value is 0.3%/°C.

TEST CIRCUIT

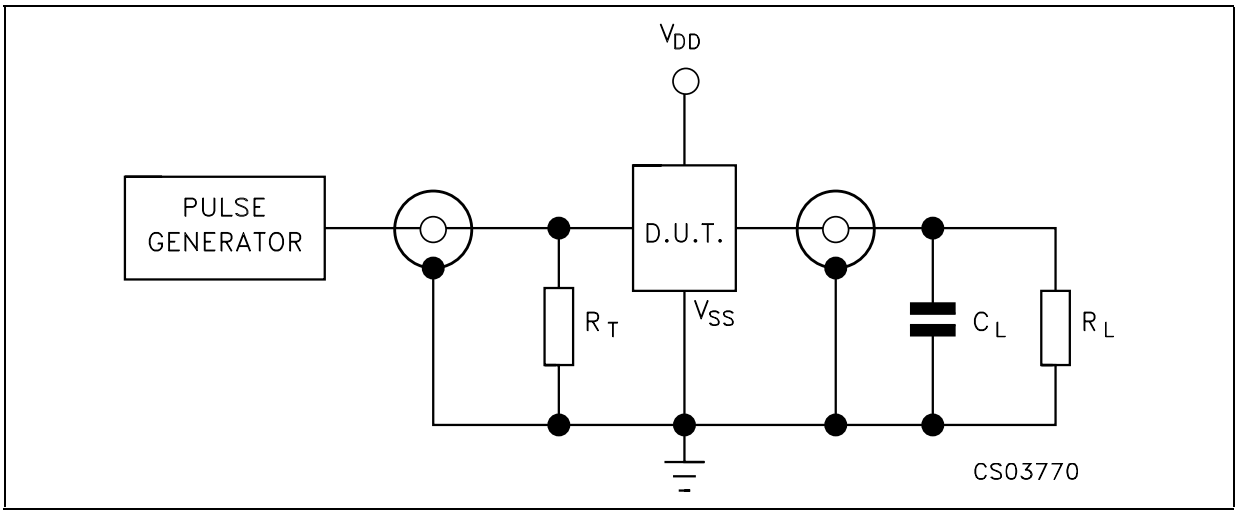

C_L = 50pF or equivalent (includes jig and probe capacitance)
R_L = 200KΩ
$R_T = Z_{OUT}$ of pulse generator (typically 50Ω)

WAVEFORM: PROPAGATION DELAY TIMES (f=1MHz; 50% duty cycle)

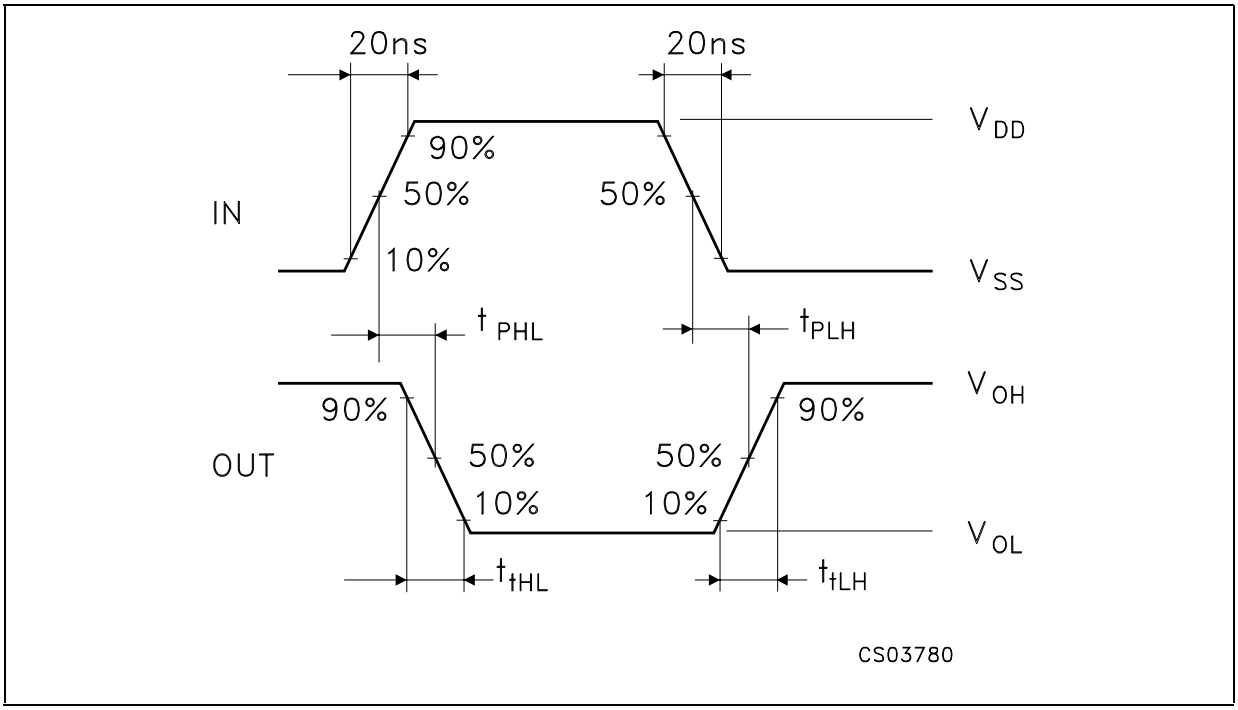

Plastic DIP-16 (0.25) MECHANICAL DATA

DIM.	mm.			inch		
	MIN.	TYP	MAX.	MIN.	TYP.	MAX.
a1	0.51			0.020		
B	0.77		1.65	0.030		0.065
b		0.5			0.020	
b1		0.25			0.010	
D			20			0.787
E		8.5			0.335	
e		2.54			0.100	
e3		17.78			0.700	
F			7.1			0.280
I			5.1			0.201
L		3.3			0.130	
Z			1.27			0.050

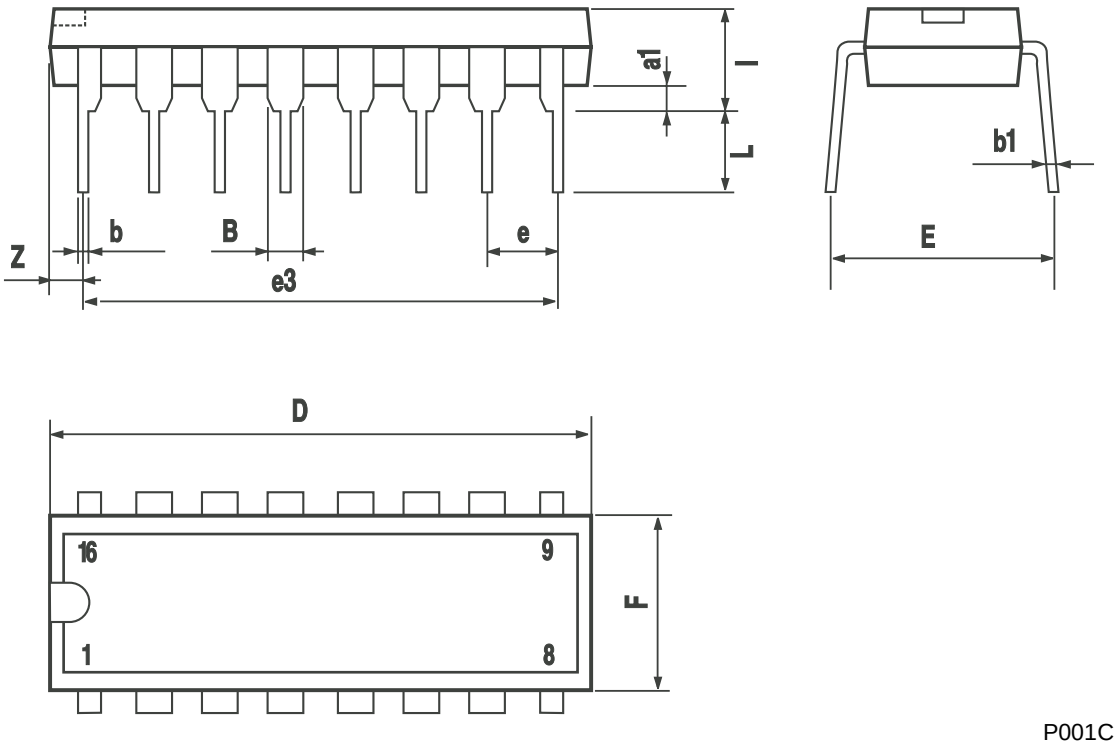

P001C

SO-16 MECHANICAL DATA

DIM.	mm.			inch		
	MIN.	TYP	MAX.	MIN.	TYP.	MAX.
A			1.75			0.068
a1	0.1		0.2	0.004		0.008
a2			1.65			0.064
b	0.35		0.46	0.013		0.018
b1	0.19		0.25	0.007		0.010
C		0.5			0.019	
c1	45° (typ.)					
D	9.8		10	0.385		0.393
E	5.8		6.2	0.228		0.244
e		1.27			0.050	
e3		8.89			0.350	
F	3.8		4.0	0.149		0.157
G	4.6		5.3	0.181		0.208
L	0.5		1.27	0.019		0.050
M			0.62			0.024
S	8		° (max.)			

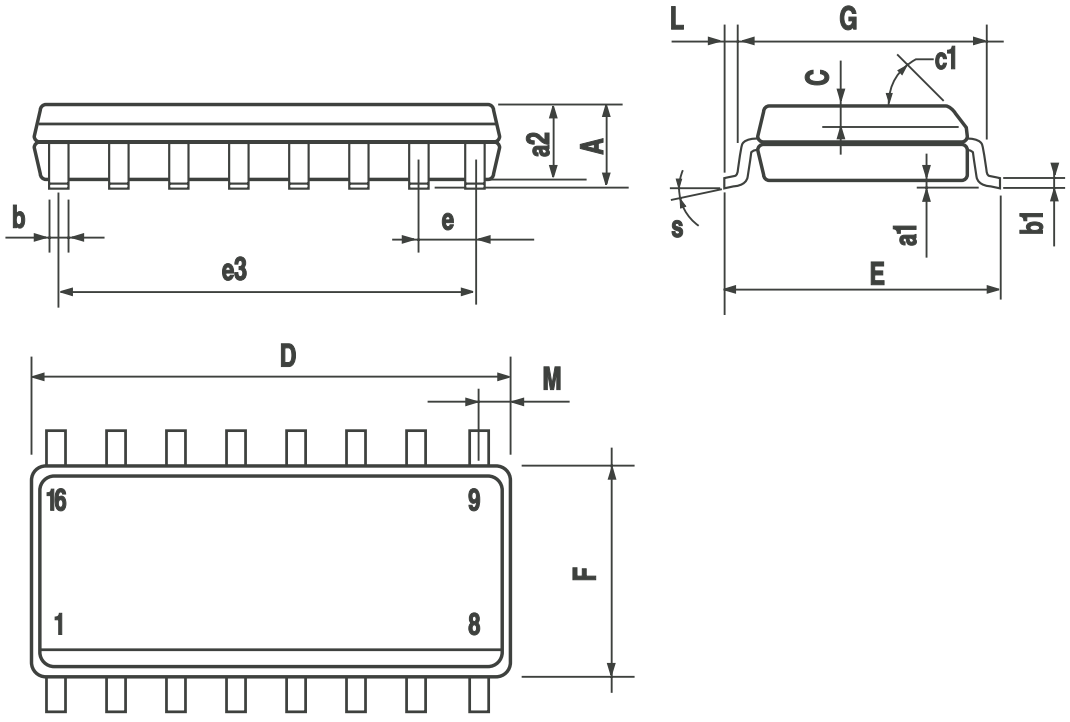

PO13H

Tape & Reel SO-16 MECHANICAL DATA

DIM.	mm.			inch		
	MIN.	TYP	MAX.	MIN.	TYP.	MAX.
A			330			12.992
C	12.8		13.2	0.504		0.519
D	20.2			0.795		
N	60			2.362		
T			22.4			0.882
Ao	6.45		6.65	0.254		0.262
Bo	10.3		10.5	0.406		0.414
Ko	2.1		2.3	0.082		0.090
Po	3.9		4.1	0.153		0.161
P	7.9		8.1	0.311		0.319

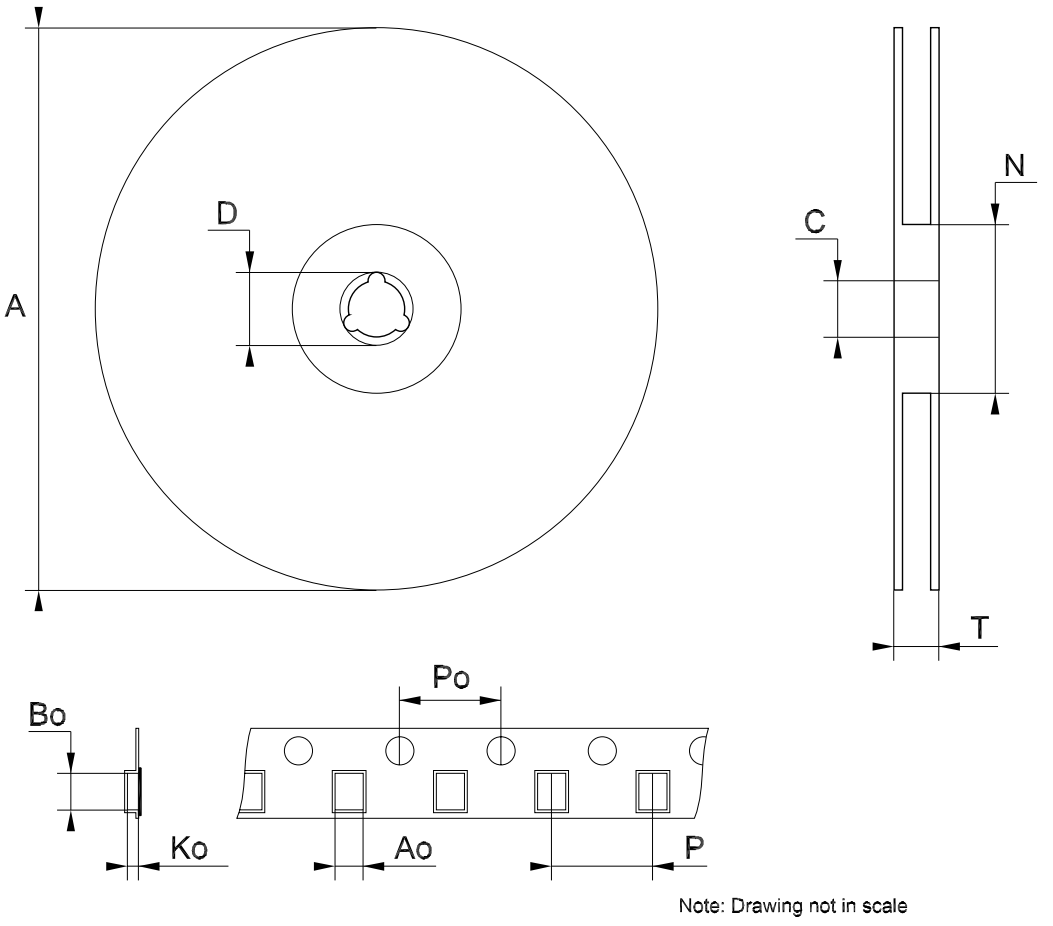

Note: Drawing not in scale

Information furnished is believed to be accurate and reliable. However, STMicroelectronics assumes no responsibility for the consequences of use of such information nor for any infringement of patents or other rights of third parties which may result from its use. No license is granted by implication or otherwise under any patent or patent rights of STMicroelectronics. Specifications mentioned in this publication are subject to change without notice. This publication supersedes and replaces all information previously supplied. STMicroelectronics products are not authorized for use as critical components in life support devices or systems without express written approval of STMicroelectronics.

The ST logo is a registered trademark of STMicroelectronics

All other names are the property of their respective owners

© 2004 STMicroelectronics - All Rights Reserved

STMicroelectronics GROUP OF COMPANIES

Australia - Belgium - Brazil - Canada - China - Czech Republic - Finland - France - Germany - Hong Kong - India - Israel - Italy - Japan - Malaysia - Malta - Morocco - Singapore - Spain - Sweden - Switzerland - United Kingdom - United States.

http://www.st.com

ENTEGRECİ

Bu belge www.entegreci.com üzerinden sunulmaktadır.

Elektronik komponent tedarikinde Entegreci

Entegreci, Eskişehir merkezli, Türkiye geneline satış yapan bir elektronik komponent mağazasıdır. Entegreler (IC), mikrodenetleyiciler, transistörler, diyotlar, pasif elemanlar, konnektörler, modüller ve geliştirme kartları tek adetten seri üretim adetlerine kadar satılır. Ürün sayfalarında güncel stok durumunu, fiyatı ve datasheet bağlantısını bulabilirsiniz.

Parça koduyla arama

Üretici parça numarasını yazın; stok ve fiyatı hemen görün.

www.entegreci.com

Ürün kategorileri

Entegreden kapasitöre tüm elektronik komponent kategorileri.

Kategorilere göz atın

Üreticiler

Aradığınız üreticinin ürünlerini tek sayfada inceleyin.

Üreticileri görün

Toplu alım ve teklif

Listede olmayan ya da yüksek adetli parçalar için teklif isteyin.

Teklif isteyin

www.entegreci.com | **destek@entegreci.com** | **0850 305 90 34**

Entegreci is an online electronic components store based in Türkiye. Search by manufacturer part number to see stock, prices and datasheets for integrated circuits, microcontrollers, transistors, passive components and connectors, or request a quote for parts that are not listed.

Bu sayfa Entegreci tarafından eklenmiştir. Belgenin önceki sayfaları asıl yayıncısına aittir ve içeriği değiştirilmemiştir; en güncel sürüm için belgenin yayıncısına başvurun.