HA17324 Series

Quad Operational Amplifier

HITACHI

Description

HA17324 is quad operational amplifier that provide high gain and internal phase compensation, with single power supply. They can be widely used to control equipments.

Features

- Wide range of supply voltage, and single power supply used
- Internal phase compensation
- Wide range of common mode voltage, and possible to operate with an input about 0V

Ordering Information

Type No.	Application	Package
HA17324FP	Industrial use	FP-14DA
HA17324F	Commercial use	FP-14DA
HA17324	Commercial use	DP-14
HA17324P	Industrial use	DP-14

Hitachi semiconductor

Pin Arrangement

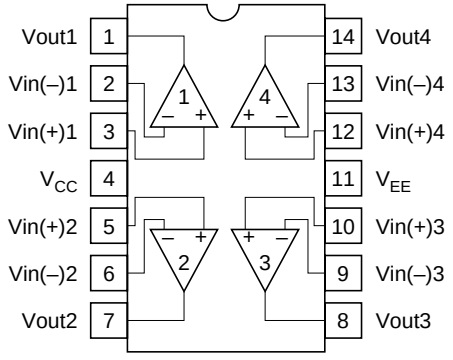

(Top View)

Circuit Schematic (1/4)

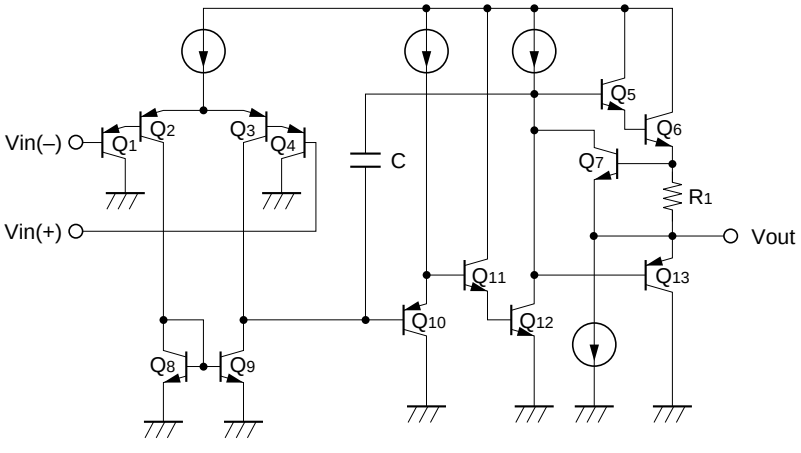

Absolute Maximum Ratings (Ta = 25°C)

Item	Symbol	Rating	Unit
Supply voltage	V_{CC}	32	V
Sink current	Isink	50	mA
Power dissipation	P_T	625*	mW
Common mode input voltage	V_{CM}	–0.3 to V_{CC}	V
Differential input voltage	Vin (diff)	$\pm V_{CC}$	V
Operating temperature	Topr	–20 to +75	°C
Storage temperature	Tstg	–55 to +125	°C

Note: These are allowable values up to Ta=50°C.
Derate by 8.3mW/°C above that temperature.
In case of SOP, see notes on SOP Package Usage in Reliability section.

Electrical Characteristics (V_{CC} = +15V, Ta = 25°C)

Item	Symbol	Min	Typ	Max	Unit	Test Conditions
Input offset voltage	V_{IO}	—	2	7	mV	V_{CM} = 7.5V, R_S = 50Ω, Rf = 50kΩ
Input offset current	I_{IO}	—	5	50	nA	V_{CM} = 7.5V, $I_{IO} = \lvert I_{I(-)} - I_{I(+)} \rvert$
Input bias current	I_{IB}	—	30	500	nA	V_{CM} = 7.5V
Power source rejection ratio	PSRR	—	93	—	dB	f = 100Hz, R_S = 1kΩ, Rj = 100kΩ
Voltage gain	A_{VD}	75	90	—	dB	R_S = 1 kΩ, Rf = 100kΩ, R_L = ∞
Common mode rejection ratio	CMR	—	80	—	dB	R_S = 50Ω, Rf = 5kΩ
Common mode input voltage range	V_{CM}	–0.3	—	13.5	V	R_S = 1kΩ, Rf = 100kΩ, f = 100Hz
Maximum output voltage	Vop-p	—	13.6	—	V	f = 100Hz, R_S = 1kΩ, Rf = 100kΩ, R_L = 20kΩ
Output source current	Iosource	20	40	—	mA	V_{IN}^+ = 1V, V_{IN}^- = 0V, V_{OH} = 10V
Output sink current	Iosink	10	20	—	mA	V_{IN} = 0V, V_{IN} = 1V, V_{OL} = 2.5V
Supply current	I_{CC}	—	0.8	2	mA	V_{IN} = GND, R_L = ∞
Slew rate	SR	—	0.19	—	V/µs	f = 1.5kHz, V_{CM} = 7.5V, R_L = ∞
Channel separation	CS	—	120	—	dB	f = 1kHz
Output sink current	Iosink	15	50	—	µA	V_{IN}^+ = 0V, V_{IN}^- = 1V, V_{OL} = 200mV
	Iosink	3	9	—	mA	V_{IN}^+ = 0V, V_{IN}^- = 1V, V_{OL} = 1V
Output voltage	V_{OH}	13.2	13.6	—	V	I_{OH} = –1mA
	V_{OH}	12.0	13.3	—	V	I_{OH} = –10mA
Output voltage	V_{OL}	—	0.8	1.0	V	I_{OL} = 1mA
	V_{OL}	—	1.1	1.8	V	I_{OL} = 10mA

Characteristic Curves

Output Source Current vs. Ambient Temperature

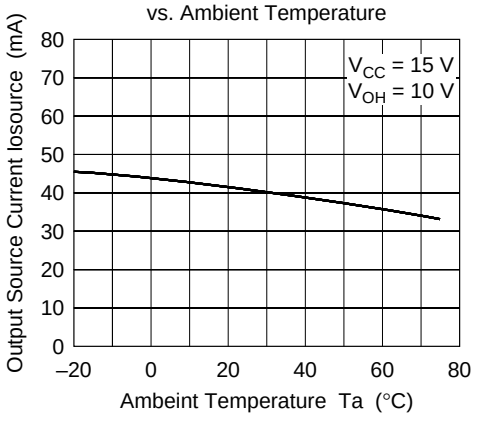

Input Bias Current vs. Ambient Temperature

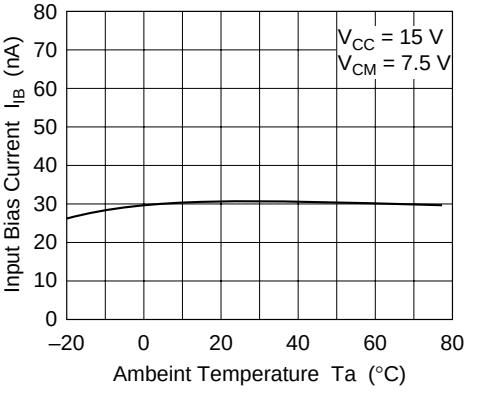

Supply Current vs. Supply Voltage

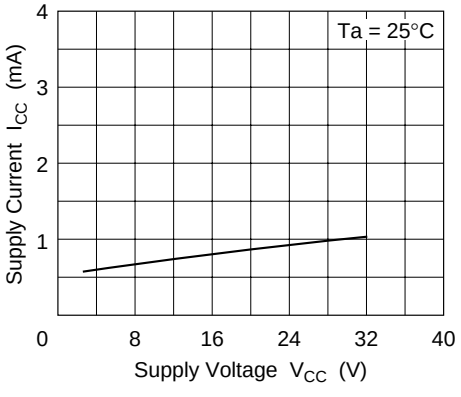

Input Bias Current vs. Supply Voltage

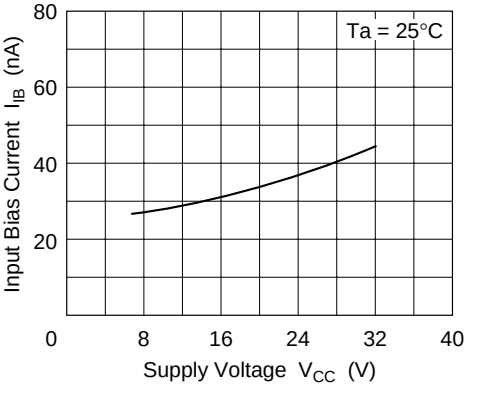

Voltage Gain vs. Supply Voltage

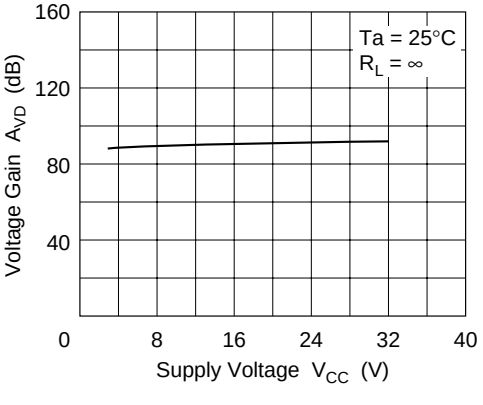

Maxlmum Output Voltage vs. Frequency

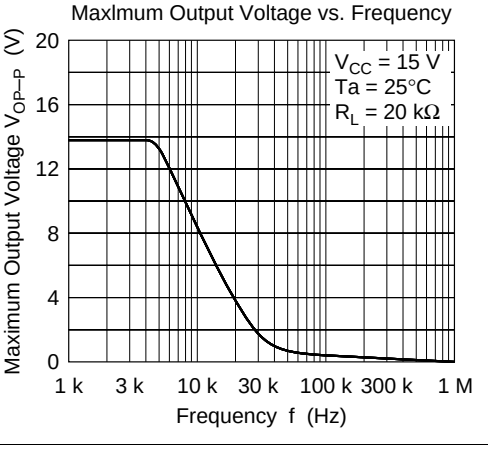

Voltage Gain vs. Frequency

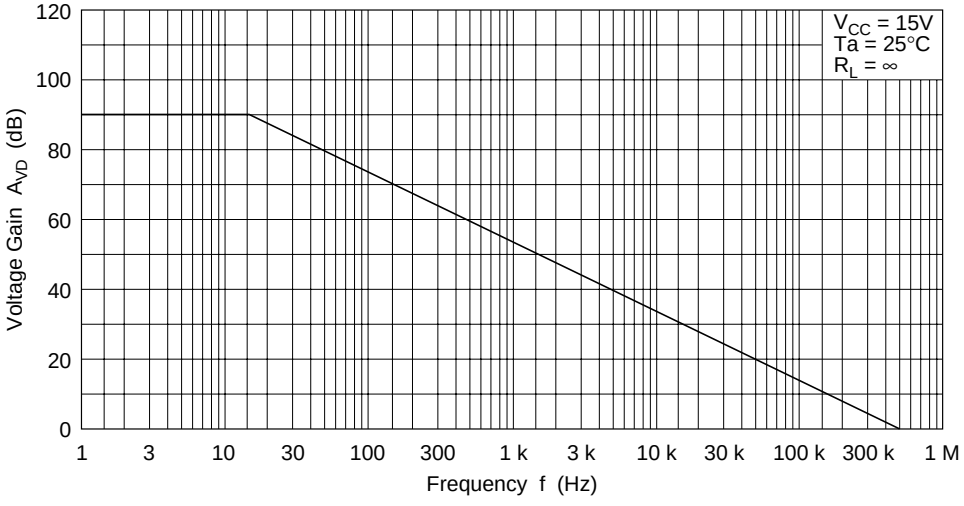

Common Mode Rejection Ratio vs. Frequency

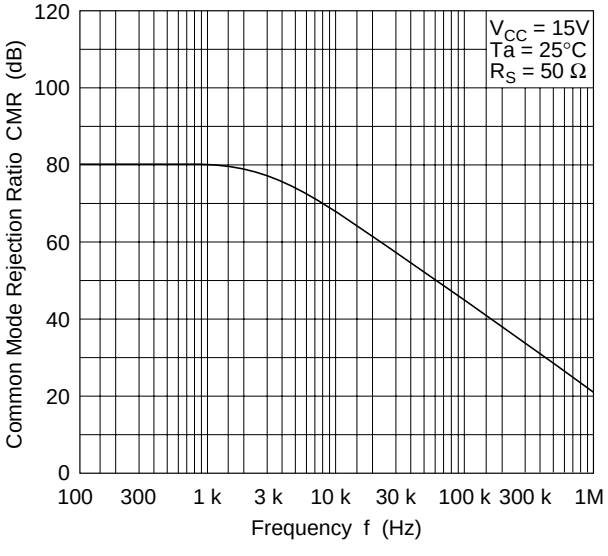

Package Dimensions

Unit: mm

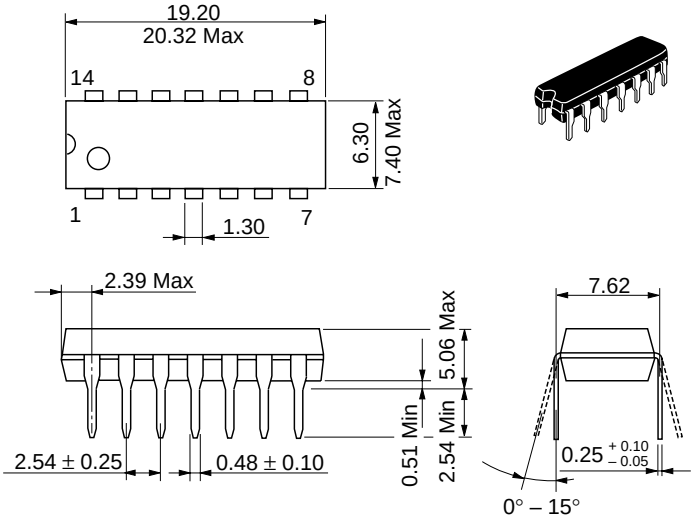

Hitachi Code	DP-14
JEDEC	Conforms
EIAJ	Conforms
Mass (reference value)	0.97 g

Unit: mm

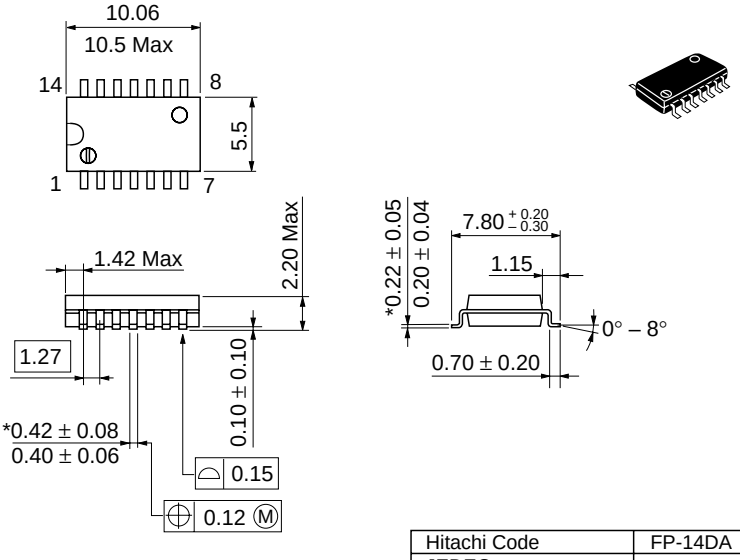

Hitachi Code	FP-14DA
JEDEC	—
EIAJ	Conforms
Mass (reference value)	0.23 g

*Dimension including the plating thickness
Base material dimension

Cautions

1. Hitachi neither warrants nor grants licenses of any rights of Hitachi's or any third party's patent, copyright, trademark, or other intellectual property rights for information contained in this document. Hitachi bears no responsibility for problems that may arise with third party's rights, including intellectual property rights, in connection with use of the information contained in this document.
2. Products and product specifications may be subject to change without notice. Confirm that you have received the latest product standards or specifications before final design, purchase or use.
3. Hitachi makes every attempt to ensure that its products are of high quality and reliability. However, contact Hitachi's sales office before using the product in an application that demands especially high quality and reliability or where its failure or malfunction may directly threaten human life or cause risk of bodily injury, such as aerospace, aeronautics, nuclear power, combustion control, transportation, traffic, safety equipment or medical equipment for life support.
4. Design your application so that the product is used within the ranges guaranteed by Hitachi particularly for maximum rating, operating supply voltage range, heat radiation characteristics, installation conditions and other characteristics. Hitachi bears no responsibility for failure or damage when used beyond the guaranteed ranges. Even within the guaranteed ranges, consider normally foreseeable failure rates or failure modes in semiconductor devices and employ systemic measures such as fail-safes, so that the equipment incorporating Hitachi product does not cause bodily injury, fire or other consequential damage due to operation of the Hitachi product.
5. This product is not designed to be radiation resistant.
6. No one is permitted to reproduce or duplicate, in any form, the whole or part of this document without written approval from Hitachi.
7. Contact Hitachi's sales office for any questions regarding this document or Hitachi semiconductor products.

HITACHI

Hitachi, Ltd.
Semiconductor & Integrated Circuits.
Nippon Bldg., 2-6-2, Ohte-machi, Chiyoda-ku, Tokyo 100-0004, Japan
Tel: Tokyo (03) 3270-2111 Fax: (03) 3270-5109

URL
NorthAmerica : http:semiconductor.hitachi.com/
Europe : http://www.hitachi-eu.com/hel/ecg
Asia (Singapore) : http://www.has.hitachi.com.sg/grp3/sicd/index.htm
Asia (Taiwan) : http://www.hitachi.com.tw/E/Product/SICD_Frame.htm
Asia (HongKong) : http://www.hitachi.com.hk/eng/bo/grp3/index.htm
Japan : http://www.hitachi.co.jp/Sicd/indx.htm

For further information write to:

Hitachi Semiconductor
(America) Inc.
179 East Tasman Drive,
San Jose,CA 95134
Tel: <1> (408) 433-1990
Fax: <1>(408) 433-0223

Hitachi Europe GmbH
Electronic components Group
Dornacher Straβe 3
D-85622 Feldkirchen, Munich
Germany
Tel: <49> (89) 9 9180-0
Fax: <49> (89) 9 29 30 00

Hitachi Europe Ltd.
Electronic Components Group.
Whitebrook Park
Lower Cookham Road
Maidenhead
Berkshire SL6 8YA, United Kingdom
Tel: <44> (1628) 585000
Fax: <44> (1628) 778322

Hitachi Asia Pte. Ltd.
16 Collyer Quay #20-00
Hitachi Tower
Singapore 049318
Tel: 535-2100
Fax: 535-1533

Hitachi Asia Ltd.
Taipei Branch Office
3F, Hung Kuo Building. No.167,
Tun-Hwa North Road, Taipei (105)
Tel: <886> (2) 2718-3666
Fax: <886> (2) 2718-8180

Hitachi Asia (Hong Kong) Ltd.
Group III (Electronic Components)
7/F., North Tower, World Finance Centre,
Harbour City, Canton Road, Tsim Sha Tsui,
Kowloon, Hong Kong
Tel: <852> (2) 735 9218
Fax: <852> (2) 730 0281
Telex: 40815 HITEC HX

Copyright ' Hitachi, Ltd., 1998. All rights reserved. Printed in Japan.

This datasheet has been download from:

www.datasheetcatalog.com

Datasheets for electronics components.

ENTEGRECİ

Bu belge www.entegreci.com üzerinden sunulmaktadır.

Elektronik komponent tedarikinde Entegreci

Entegreci, Eskişehir merkezli, Türkiye geneline satış yapan bir elektronik komponent mağazasıdır. Entegreler (IC), mikrodenetleyiciler, transistörler, diyotlar, pasif elemanlar, konnektörler, modüller ve geliştirme kartları tek adetten seri üretim adetlerine kadar satılır. Ürün sayfalarında güncel stok durumunu, fiyatı ve datasheet bağlantısını bulabilirsiniz.

Parça koduyla arama

Üretici parça numarasını yazın; stok ve fiyatı hemen görün.

www.entegreci.com

Ürün kategorileri

Entegreden kapasitöre tüm elektronik komponent kategorileri.

Kategorilere göz atın

Üreticiler

Aradığınız üreticinin ürünlerini tek sayfada inceleyin.

Üreticileri görün

Toplu alım ve teklif

Listede olmayan ya da yüksek adetli parçalar için teklif isteyin.

Teklif isteyin

www.entegreci.com | **destek@entegreci.com** | **0850 305 90 34**

Entegreci is an online electronic components store based in Türkiye. Search by manufacturer part number to see stock, prices and datasheets for integrated circuits, microcontrollers, transistors, passive components and connectors, or request a quote for parts that are not listed.

Bu sayfa Entegreci tarafından eklenmiştir. Belgenin önceki sayfaları asıl yayıncısına aittir ve içeriği değiştirilmemiştir; en güncel sürüm için belgenin yayıncısına başvurun.