FAIRCHILD
SEMICONDUCTOR®

AC INPUT/PHOTOTRANSISTOR OPTOCOUPLERS

H11AA1 H11AA3 H11AA2 H11AA4

DESCRIPTION

The H11AAX series consists of two gallium-arsenide infrared emitting diodes connected in inverse parallel driving a single silicon phototransistor output.

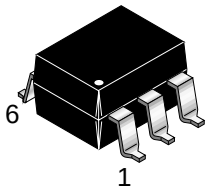

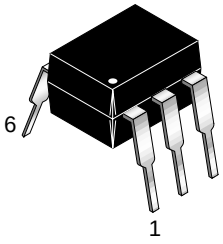

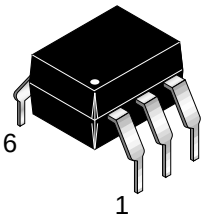

FEATURES

- Bi-polar emitter input
- Built-in reverse polarity input protection
- Underwriters Laboratory (UL) recognized — File #E90700
- VDE approved — File #E94766 (ordering option '300')

APPLICATIONS

- AC line monitor
- Unknown polarity DC sensor
- Telephone line interface

SCHEMATIC

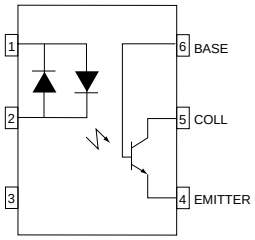

Parameter	Symbol	Device	Value	Units
TOTAL DEVICE				
Storage Temperature	T_{STG}	All	-55 to +150	°C
Operating Temperature	T_{OPR}	All	-55 to +100	°C
Lead Solder Temperature	T_{SOL}	All	260 for 10 sec	°C
Total Device Power Dissipation	P_D	All	350	mW
Derate Linearly From 25°C			4.6	mW/°C
EMITTER				
Continuous Forward Current	I_F	All	100	mA
Forward Current - Peak (1 µs pulse, 300 pps)	I_F(pk)	All	±1.0	A
LED Power Dissipation	P_D	All	200	mW
Derate Linearly From 25°C			2.6	mW/°C
DETECTOR				
Detector Power Dissipation	P_D	All	300	mW
Derate above 25°C			4.0	mW/°C

© 2001 Fairchild Semiconductor Corporation

ELECTRICAL CHARACTERISTICS (T_A = 25°C Unless otherwise specified.)

INDIVIDUAL COMPONENT CHARACTERISTICS

Parameter	Test Conditions	Symbol	Device	Min	Typ	Max	Unit
EMITTER							
Input Forward Voltage	I_F = ±10 mA	V_F	All		1.2	1.5	V
Capacitance	V_F = 0 V, f = 1.0 MHz	C_J	All		80		pF
DETECTOR							
Breakdown Voltage							
Collector to Emitter	I_C = 1.0 mA, I_F = 0	BV_{CEO}	All	30			V
Collector to Base	I_C = 100 µA, I_F = 0	BV_{CBO}	All	70			V
Emitter to Base	I_E = 100 µA, I_F = 0	BV_{EBO}	All	5			V
Emitter to Collector	I_E = 100 µA, I_F = 0	BV_{ECO}	All	7			V
Leakage Current							
Collector to Emitter	V_{CE} = 10 V, I_F = 0	I_{CEO}	H11AA1,3,4			50	nA
			H11AA2			200	
Capacitance							
Collector to Emitter	V_{CE} = 0, f = 1 MHz	C_{CE}	All		10		pF
Collector to Base	V_{CE} = 0, f = 1 MHz	C_{CB}	All		80		pF
Emitter to Base	V_{CE} = 0, f = 1 MHz	C_{EB}	All		15		pF

TRANSFER CHARACTERISTICS (T_A = 25°C Unless otherwise specified.)

Characteristics	Test Conditions	Symbol	Device	Min	Typ	Max	Units
Current Transfer Ratio, Collector to Emitter	I_F = ±10 mA, V_{CE} = 10 V	CTR_{CE}	H11AA4	100			%
			H11AA3	50			
			H11AA1	20			
			H11AA2	10			
Current Transfer Ratio, Symmetry	I_F = ±10 mA, V_{CE} = 10 V (Figure.8)		All	.33		3.0	%
Saturation Voltage Collector to Emitter	I_F = ±10 mA, I_{CE} = 0.5 mA	$V_{CE(SAT)}$	All			.40	V

ISOLATION CHARACTERISTICS

Characteristic	Test Conditions	Symbol	Min	Typ	Max	Units
Package Capacitance input/output	V_{I-O} = 0, f = 1 MHz	C_{I-O}		0.7		pF
Isolation Voltage	f = 60 Hz, t = 1 min.	V_{ISO}	5300			V
Isolation Resistance	V_{I-O} = 500 VDC	R_{ISO}	10^{11}			Ω

Fig. 1 Input Voltage vs. Input Current

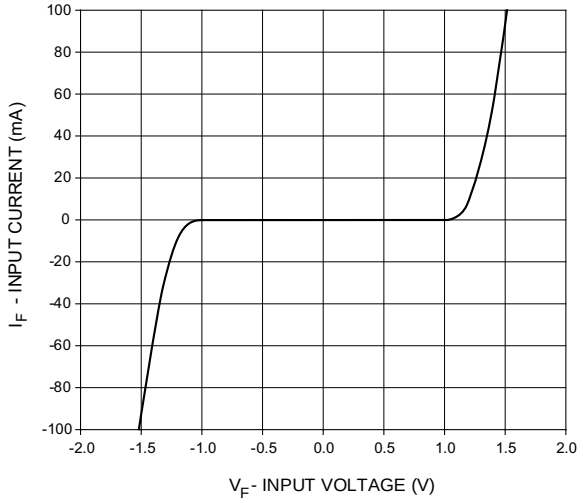

Fig. 2 Normalized CTR vs. Forward Current

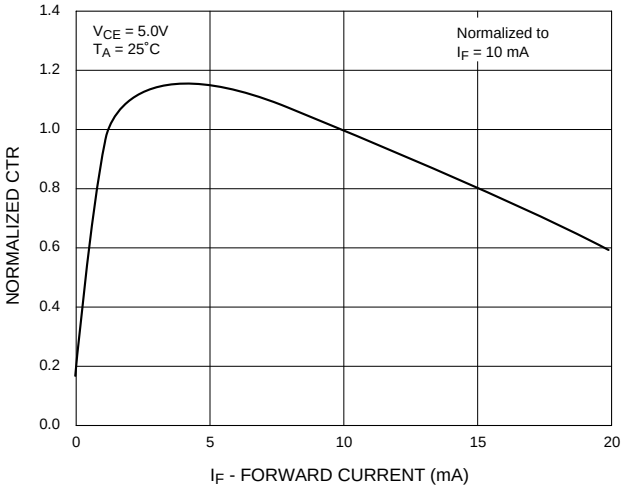

Fig. 3 Normalized CTR vs. Ambient Temperature

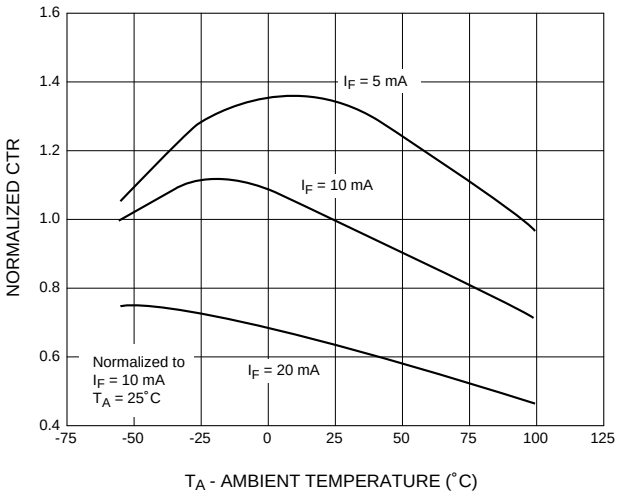

Fig. 4 CTR vs. RBE (Unsaturated)

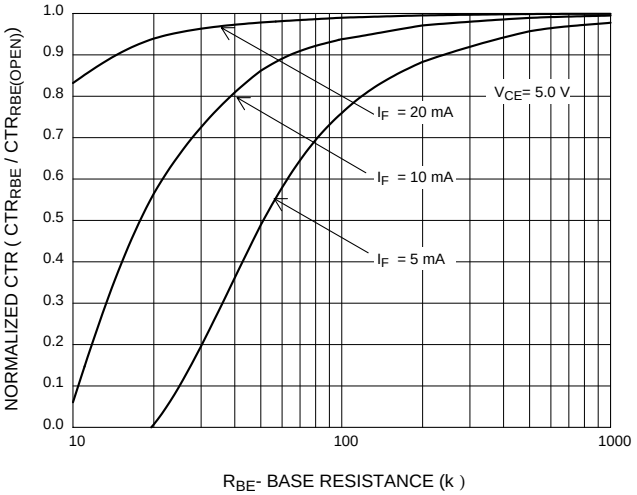

Fig. 5 CTR vs. RBE (Saturated)

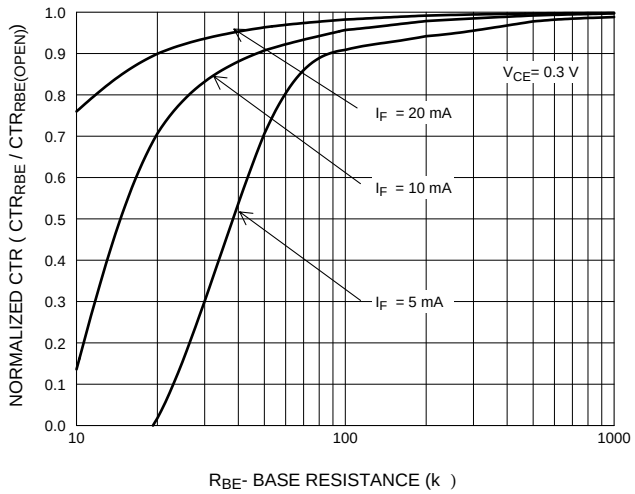

Fig. 6 Collector-Emitter Saturation Voltage vs Collector Current

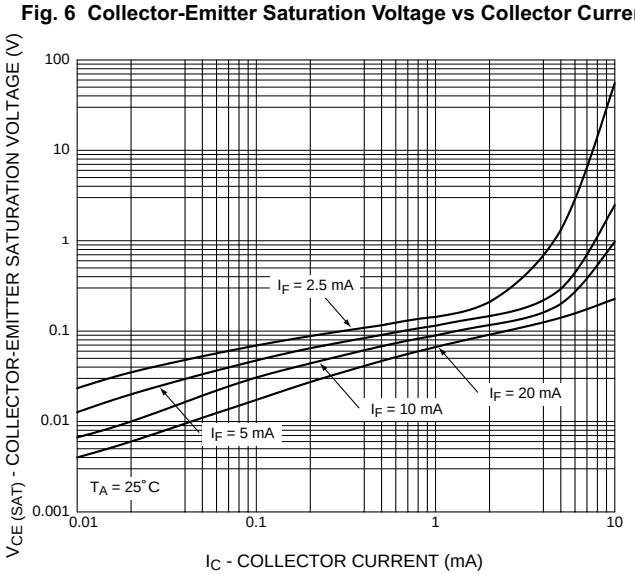

Fig. 7 Switching Speed vs. Load Resistor

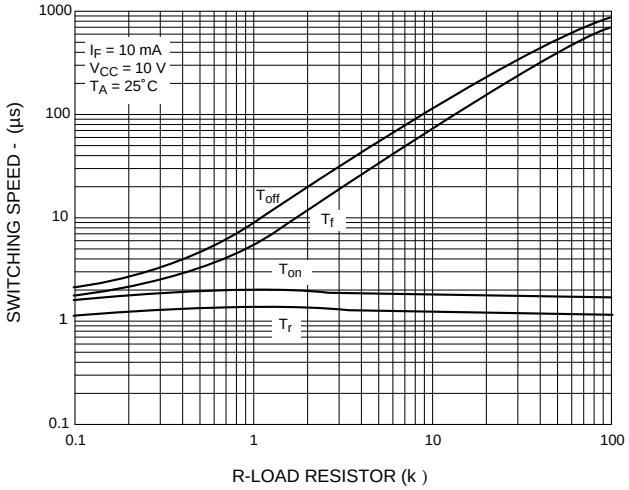

Fig. 8 Normalized t_{on} vs. R_{BE}

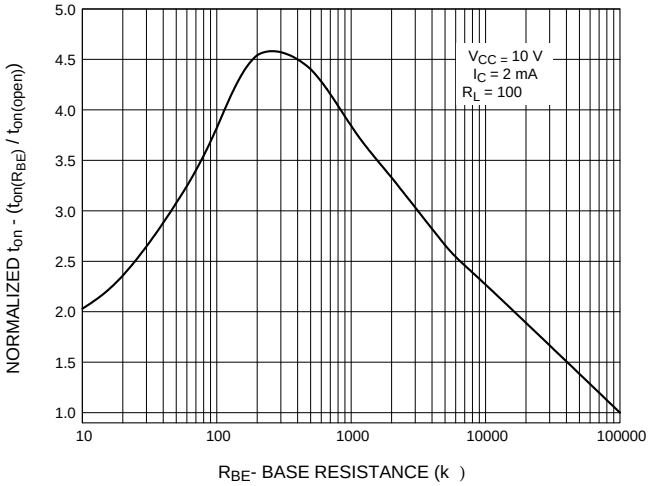

Fig. 9 Normalized t_{off} vs. R_{BE}

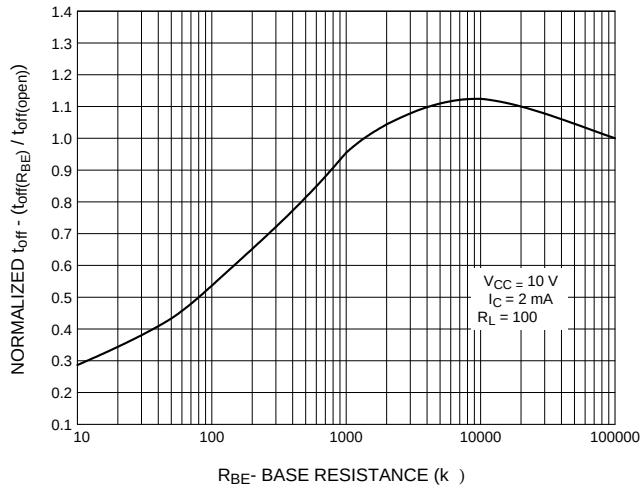

Fig. 10 Dark Current vs. Ambient Temperature

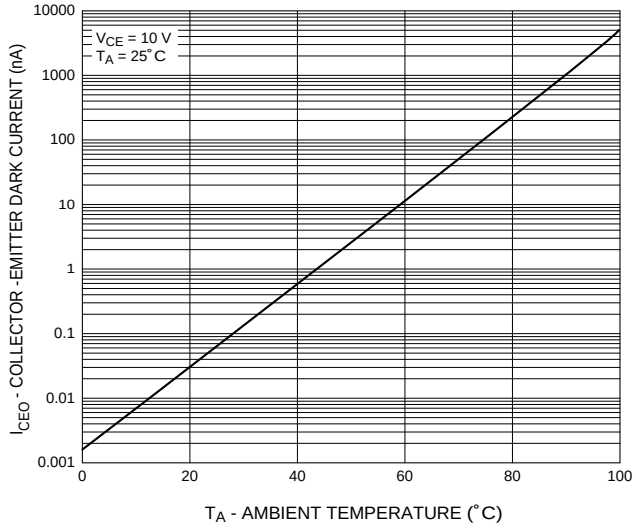

Fig. 11 Output Symmetry Characteristics

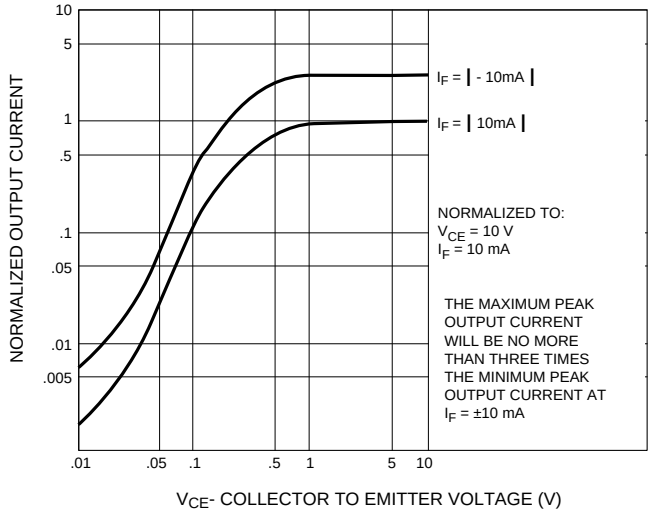

Package Dimensions (Through Hole)

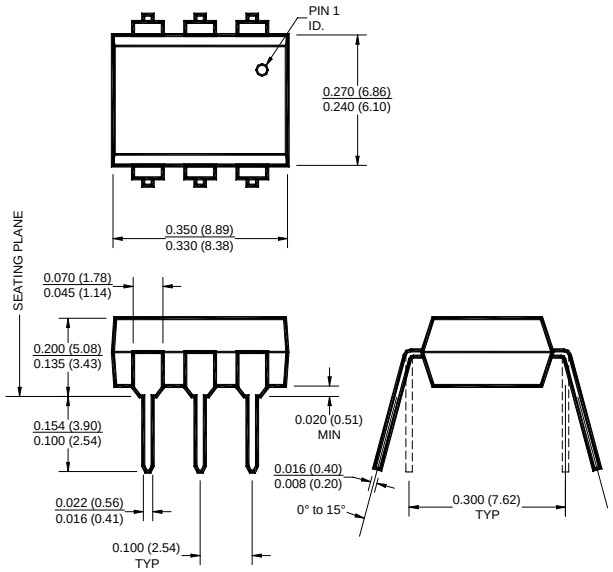

Package Dimensions (Surface Mount)

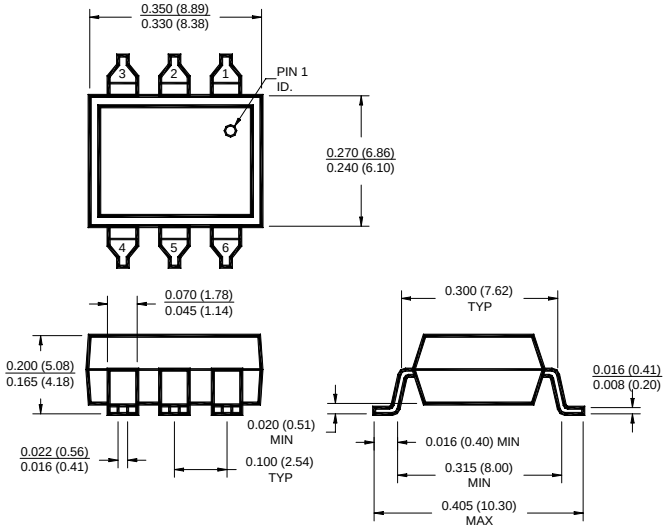

Lead Coplanarity : 0.004 (0.10) MAX

Package Dimensions (0.4”Lead Spacing)

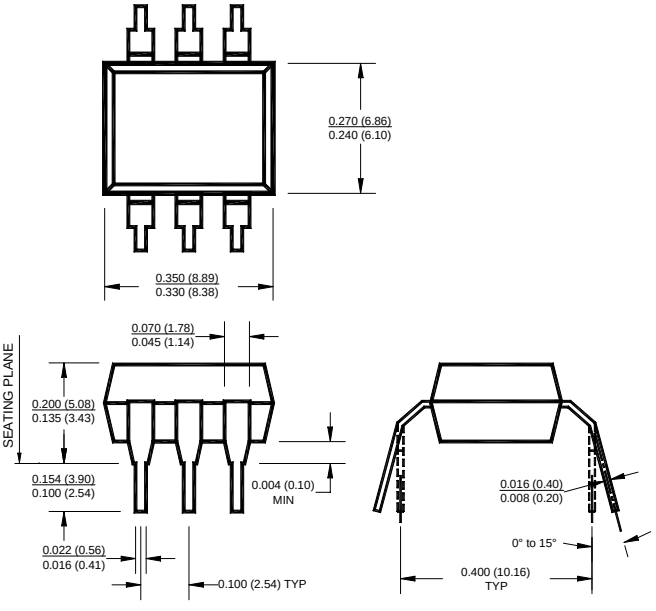

Recommended Pad Layout for Surface Mount Leadform

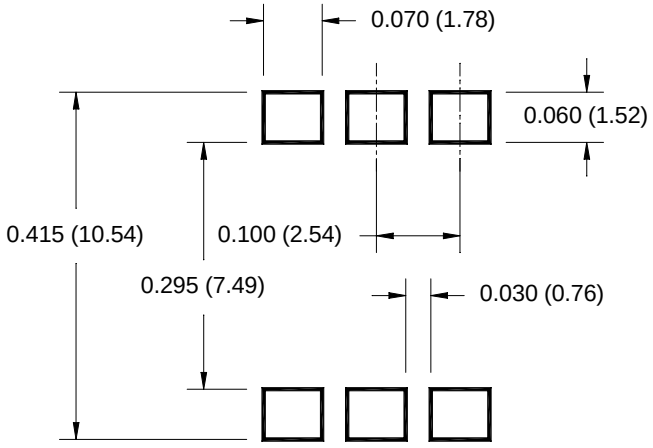

NOTE

All dimensions are in inches (millimeters)

ORDERING INFORMATION

Option	Order Entry Identifier	Description
S	.S	Surface Mount Lead Bend
SD	.SD	Surface Mount; Tape and Reel
W	.W	0.4” Lead Spacing
300	.300	VDE 0884
300W	.300W	VDE 0884, 0.4” Lead Spacing
3S	.3S	VDE 0884, Surface Mount
3SD	.3SD	VDE 0884, Surface Mount, Tape and Reel

Carrier Tape Specifications (“D” Taping Orientation)

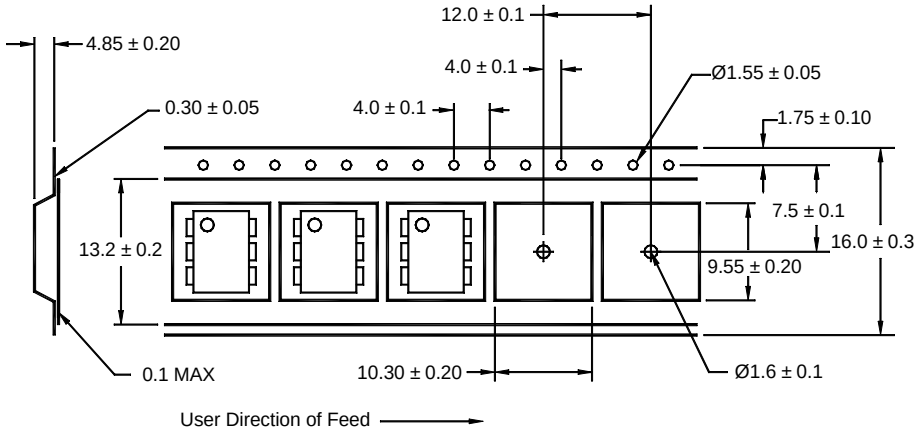

NOTE

All dimensions are millimeters

DISCLAIMER

FAIRCHILD SEMICONDUCTOR RESERVES THE THE RIGHT TO MAKE CHANGES WITHOUT FURTHER NOTICE TO ANY PRODUCTS HEREIN TO IMPROVE RELIABILITY, FUNCTION OR DESIGN. FAIRCHILD DOES NOT ASSUME ANY LIABILITY ARISING OUT OF THE APPLICATION OR USE OF ANY PRODUCT OR CIRCUIT DESCRIBED HEREIN; NEITHER DOES IT CONVEY ANY LICENSE UNDER ITS PATENT RIGHTS, NOR THE RIGHTS OF OTHERS.

LIFE SUPPORT POLICY

FAIRCHILD'S PRODUCTS ARE NOT AUTHORIZED FOR USE AS CRITICAL COMPONENTS IN LIFE SUPPORT DEVICES OR SYSTEMS WITHOUT THE EXPRESS WRITTEN APPROVAL OF THE PRESIDENT OF FAIRCHILD SEMICONDUCTOR CORPORATION. As used herein:

1. Life support devices or systems are devices or systems which, (a) are intended for surgical implant into the body,or (b) support or sustain life, and (c) whose failure to perform when properly used in accordance with instructions for use provided in labeling, can be reasonably expected to result in a significant injury of the user.
2. A critical component in any component of a life support device or system whose failure to perform can be reasonably expected to cause the failure of the life support device or system, or to affect its safety or effectiveness.

ENTEGRECİ

Bu belge www.entegreci.com üzerinden sunulmaktadır.

Elektronik komponent tedarikinde Entegreci

Entegreci, Eskişehir merkezli, Türkiye geneline satış yapan bir elektronik komponent mağazasıdır. Entegreler (IC), mikrodenetleyiciler, transistörler, diyotlar, pasif elemanlar, konnektörler, modüller ve geliştirme kartları tek adetten seri üretim adetlerine kadar satılır. Ürün sayfalarında güncel stok durumunu, fiyatı ve datasheet bağlantısını bulabilirsiniz.

Parça koduyla arama

Üretici parça numarasını yazın; stok ve fiyatı hemen görün.

www.entegreci.com

Ürün kategorileri

Entegreden kapasitöre tüm elektronik komponent kategorileri.

Kategorilere göz atın

Üreticiler

Aradığınız üreticinin ürünlerini tek sayfada inceleyin.

Üreticileri görün

Toplu alım ve teklif

Listede olmayan ya da yüksek adetli parçalar için teklif isteyin.

Teklif isteyin

www.entegreci.com | **destek@entegreci.com** | **0850 305 90 34**

Entegreci is an online electronic components store based in Türkiye. Search by manufacturer part number to see stock, prices and datasheets for integrated circuits, microcontrollers, transistors, passive components and connectors, or request a quote for parts that are not listed.

Bu sayfa Entegreci tarafından eklenmiştir. Belgenin önceki sayfaları asıl yayıncısına aittir ve içeriği değiştirilmemiştir; en güncel sürüm için belgenin yayıncısına başvurun.