CS Series

STANDARD

標準品



- Operating with general temperature range -40 ~ +105°C
  適用於 -40 ~ +105°C 的常規溫度範圍
- Load life of 1000～2000 hours
  負荷壽命 1000～2000 小時
- Comply with the RoHS directive
  符合 RoHS 指令

CS → Long life 長壽命 → CK

□ SPECIFICATIONS 特性表

Items 項目	Characteristics 主要特性
Operation Temperature Range 使用溫度範圍	-40 ~ +105°C
Voltage Range 額定工作電壓範圍	4 ~ 100V
Capacitance Range 靜電容量範圍	0.1 ~ 6800μF
Capacitance Tolerance 靜電容量允許偏差	±20% at 120Hz, 20°C
Leakage Current 漏電流	Leakage current (∅4~∅10) ≦0.01CV or 3μA, whichever is greater (after 2 minutes application of rated voltage) Leakage current (∅12.5~∅16) ≦0.03CV or 4μA, whichever is greater (after 1 minute application of rated voltage) 漏電流 (∅4~∅10) ≦0.01CV 或 3μA，取較大值（施加額定工作電壓 2 分鐘後） 漏電流 (∅12.5~∅16) ≦0.03CV 或 4μA，取較大值（施加額定工作電壓 1 分鐘後）
Dissipation Factor (tan δ) 損耗角正切	Measurement frequency 測試頻率: 120Hz, Temperature 温度: 20°C

Rated Voltage (V) 額定工作電壓		4	6.3	10	16	25	35	50	63	100
tan δ (max.) 最大損耗角正切	∅4~∅10	0.35	0.30	0.24	0.20	0.16	0.14	0.14	0.12	0.10
	∅12.5~∅16	0.42	0.38	0.34	0.30	0.26	0.22	0.18	0.14	0.10

Stability at Low Temperature 低溫特性

Measurement frequency 測試頻率: 120Hz

Rated Voltage (V) 額定工作電壓			4	6.3	10	16	25	35	50~100
Impedance Ratio 阻抗比 ZT/Z20 (max.)	∅4~∅10	Z(-25°C) / Z(20°C)	7	4	3	2	2	2	2
		Z(-40°C) / Z(20°C)	15	8	6	4	4	3	3
	∅12.5~∅16	Z(-25°C) / Z(20°C)	7	5	4	3	2	2	2
		Z(-40°C) / Z(20°C)	17	12	10	8	5	4	3

Load Life 高溫負荷特性

After 2000 hrs. (1000 hrs. for ∅4~∅6.3×5.4) application of the rated voltage at 105°C, they meet the characteristics listed below. 在 105°C 環境中施加額定工作電壓 2000 小時（∅4~∅6.3×5.4 為 1000 小時）後，電容器的特性符合下表的要求。

Capacitance Change 靜電容量變化率	Within ±20% of initial value (Within ±30% of initial value for 4V) 初始值的±20%以內（4V 為±30%以內）
Dissipation Factor 損耗角正切	200% or less of initial specified value 不大於規範值的 200%
Leakage Current 漏電流	initial specified value or less 不大於規範值

Shelf Life 高溫貯存特性

After leaving capacitors under no load at 105°C for 1000 hours, they meet the specified value for load life characteristics listed above. 在 105°C 環境中無負荷放置 1000 小時後，電容器的特性符合高溫負荷特性中所列的規定值。

Resistance to Soldering Heat 耐焊接熱特性

After reflow soldering and restored at room temperature, they meet the characteristics listed below.
經過回流焊並冷卻至室溫後，電容器的特性符合下表的要求。

Capacitance Change 靜電容量變化率	Within ±10% of initial value 初始值的±10%以內
Dissipation Factor 損耗角正切	initial specified value or less 不大於規範值
Leakage Current 漏電流	initial specified value or less 不大於規範值

Marking 標示: Black print on the case top. 鋁殼頂部黑字印刷。

□ DRAWING (Unit: mm) 外形圖

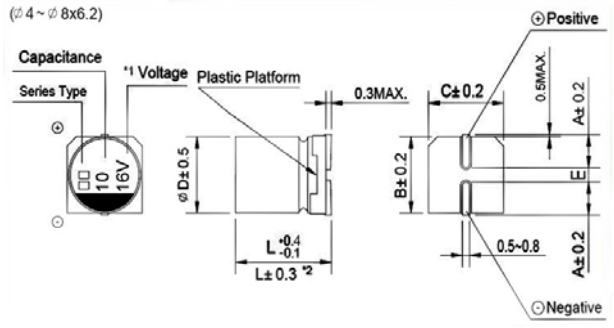

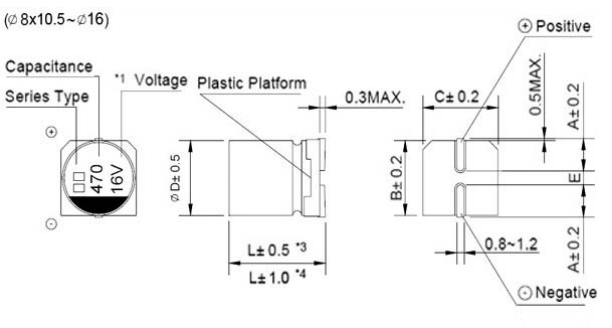

*1. Voltage mark for 6.3V is [6V] 6.3V 的產品標識為 [6V]
*2. Applicable to ∅6.3×7.7 適用於∅6.3×7.7
*3. Applicable to ∅8×10.5~∅10 適用於∅8×10.5~∅10
*4. Applicable to ∅12.5~∅16 適用於∅12.5~∅16

NOTE: All designs and specifications are for reference only and are subject to change without prior notice. If any doubt about safety for your application, please contact us immediately for technical assistance before purchase.

注: 以上所提供的設計及特性參數僅供參考作用，任何修改不作預先通知。如果在使用上有疑問，請在采購前與我們聯絡，以便提供技術上的協助。

CS Series

□ DIMENSIONS (Unit: mm) 尺寸表

ØD x L	4 x 5.4	5 x 5.4	6.3 x 5.4	6.3 x 7.7	8 x 6.2	8 x 10.5	10 x 10.5	10 x 13.5	12.5 x 13.5	12.5 x 16	16 x 16.5
A	1.8	2.1	2.5	2.5	3.3	2.9	3.2	3.2	4.7	4.7	5.5
B	4.3	5.3	6.6	6.6	8.3	8.3	10.3	10.3	13.0	13.0	17.0
C	4.3	5.3	6.6	6.6	8.3	8.3	10.3	10.3	13.0	13.0	17.0
E ± 0.2	1.0	1.3	2.2	2.2	2.2	3.1	4.4	4.4	4.4	4.4	6.7
L	5.4	5.4	5.4	7.7	6.2	10.5	10.5	13.5	13.5	16.0	16.5

□ DIMENSIONS & MAXIMUM PERMISSIBLE RIPPLE CURRENT 規格尺寸及最大允許紋波電流

WV / Code 代碼 / μF		4		6.3		10		16		25	
		0G		0J		1A		1C		1E	
4.7	4R7									4 × 5.4	13
10	100							4 × 5.4	18	5 × 5.4 (4 × 5.4)	20 (14)
22	220			4 × 5.4	22	5 × 5.4 (4 × 5.4)	25 (20)	5 × 5.4 (4 × 5.4)	27 (20)	6.3 × 5.4 (5 × 5.4)	36 (25)
33	330	5 × 5.4 (4 × 5.4)	30 (18)	5 × 5.4 (4 × 5.4)	27 (22)	5 × 5.4 (4 × 5.4)	30 (22)	6.3 × 5.4 (5 × 5.4)	40 (28)	6.3 × 5.4 (5 × 5.4)	44 (29)
47	470	5 × 5.4 (4 × 5.4)	36 (24)	5 × 5.4 (4 × 5.4)	33 (25)	6.3 × 5.4 (5 × 5.4) (4 × 5.4)	41 (30) (25)	6.3 × 5.4 (5 × 5.4)	48 (31)	6.3 × 5.4 (8 × 6.2)	48 (91)
56	560	4 × 5.4	32	5 × 5.4	40	6.3 × 5.4	50	6.3 × 5.4	65	6.3 × 5.4	75
68	680	5 × 5.4	40	5 × 5.4	45	6.3 × 5.4	65	6.3 × 5.4	75	6.3 × 5.4	85
100	101	6.3 × 5.4 (5 × 5.4)	60 (43)	6.3 × 5.4 (5 × 5.4)	50 (39)	6.3 × 5.4 (5 × 5.4)	53 (49)	6.3 × 5.4 (8 × 6.2)	60 (120)	6.3 × 7.7	91
150	151	6.3 × 5.4	52	6.3 × 5.4	55	6.3 × 5.4	62	6.3 × 7.7	95	8 × 10.5 (6.3 × 7.7)	140 (100)
220	221	6.3 × 5.4	57	6.3 × 7.7 (6.3 × 5.4)	105 (67)	6.3 × 7.7 (8 × 6.2)	105 (105)	8 × 10.5 (6.3 × 7.7) (8 × 6.2)	150 (105) (85)	8 × 10.5	175
330	331	6.3 × 7.7	100	6.3 × 7.7	105	8×10.5	196	8 × 10.5	195	10 × 10.5 (8 × 10.5)	240 (220)
470	471	6.3 × 7.7	105	8 × 10.5 (6.3 x 7.7)	210 (120)	10 × 10.5 (8 × 10.5) (6.3 x 7.7)	260 (210) (120)	10 × 10.5 (8 × 10.5)	295 (230)	10 × 10.5	280
680	681	8 × 10.5	210	8 × 10.5	210	10 × 10.5	270	10 × 10.5	315	10 × 13.5	400
1000	102	8 × 10.5	230	10 × 10.5 (8 × 10.5)	300 (230)	10 × 10.5 (8 × 10.5)	315 (230)	12.5 × 13.5 (10 × 13.5) (10 × 10.5)	500 (390) (340)	12.5 × 13.5	580
1500	152	10 × 10.5	315	10 × 13.5 (10 × 10.5)	450 (315)	10 × 13.5	460	12.5 × 13.5	550	12.5 × 16	850
2200	222	10 × 13.5 (10 × 10.5)	440 （340）	12.5 × 13.5 (10 × 13.5)	620 (500)	12.5 × 13.5	680	16 × 16.5 (12.5 × 16)	950 (750)	16 × 16.5	1050
3300	332	10 × 13.5	490	12.5 × 16 (12.5 × 13.5)	700 (660)	16 × 16.5	1000	16 × 16.5	1000		
4700	472	12.5 × 13.5	600	16 × 16.5	1000					Case size 尺寸	Ripple current 紋波電流
6800	682	16 × 16.5 (12.5 × 16)	950 （650）								

WV / Code 代碼 / μF		35		50		63		100	
		1V		1H		1J		2A	
0.1	0R1			4 × 5.4	0.7	4 × 5.4	0.7		
0.22	R22			4 × 5.4	1.6	4 × 5.4	1.6		
0.33	R33			4 × 5.4	2.5	4 × 5.4	2.5		
0.47	R47			4 × 5.4	3.5	4 × 5.4	3.5		
1	010			4 × 5.4	7	4 × 5.4	7	4 × 5.4	7
2.2	2R2			4 × 5.4	11	4 × 5.4	11	6.3 × 5.4	14
3.3	3R3	4 × 5.4	13	4 × 5.4	13	5 × 5.4	13	6.3 × 7.7 (6.3 × 5.4)	32 (20)
4.7	4R7	4 × 5.4	14	5 × 5.4 (4 × 5.4)	16 (13)	6.3 × 5.4 (5 × 5.4)	21 (16)	6.3 × 7.7 (6.3 × 5.4)	35 (21)
10	100	5 × 5.4 (4 × 5.4)	21 (14)	6.3 × 5.4 (5 × 5.4)	34 (27)	6.3 × 7.7 (6.3 × 5.4)	55 (34)	8 × 10.5 (6.3 × 7.7) (8 × 6.2)	110 (50) (50)
22	220	6.3 × 5.4	54	6.3 × 5.4 (8 × 6.2)	60 (120)	8 × 10.5 (6.3 × 7.7) (8 × 6.2)	140 (70) (35)	10 × 10.5 (8 × 10.5)	180 (120)
33	330	6.3 × 5.4 (8 × 6.2)	42 (84)	6.3 × 7.7 (8 × 6.2)	60 (65)	8 × 10.5 (6.3 × 7.7)	112 (60)	10 × 10.5	133
47	470	6.3 × 5.4 6.3 × 7.7 (8 × 6.2)	50 70 (165)	10 × 10.5 (8 × 10.5) (6.3 × 7.7)	130 (110) (63)	10 × 10.5 (8 × 10.5)	160 (119)	10 × 13.5 (10 × 10.5) 12.5×13.5	160 (140) 250
								Case size 尺寸	Ripple current 紋波電流

•Case size ∅D×L(mm), ripple current (mA rms) at 105°C 120Hz •尺寸∅D×L(mm)，紋波電流(mA rms)於 105°C 120Hz

NOTE: All designs and specifications are for reference only and are subject to change without prior notice. If any doubt about safety for your application, please contact us immediately for technical assistance before purchase.

注：以上所提供的設計及特性參數僅供參考，任何修改不作預先通知。如果在使用上有疑問，請在採購前與我們聯繫，以便提供技術上的協助。

CS Series

□ DIMENSIONS & MAXIMUM PERMISSIBLE RIPPLE CURRENT 規格尺寸及最大允許紋波電流

WV / Code 代碼 / μF		35		50		63		100	
		1V		1H		1J		2A	
56	560	6.3 × 7.7	56	6.3 × 7.7	70	10 × 10.5	170		
68	680	6.3 × 7.7	50	8 × 10.5	120	10 × 10.5	190		
100	101	8 × 10.5 (6.3 × 7.7)	120 (84)	10 × 10.5 (8 × 10.5)	170 (140)	12.5 × 13.5 (10 × 13.5) (10 × 10.5)	270 (210) (196)	12.5 × 13.5	380
150	151	8 × 10.5	155	10 × 10.5	170	10 × 13.5	225		
220	221	10 × 10.5 (8 × 10.5)	220 (190)	10 × 13.5 (10 × 10.5)	280 (220)	12.5 × 13.5 (10 × 13.5)	470 (235)	16 × 16.5	550
330	331	10 × 10.5	245	12.5 × 13.5 (10 × 13.5)	420 (295)	16 × 16.5 (12.5 × 16)	700 (510)		
470	471	12.5 × 13.5 (10 × 13.5) (10 × 10.5)	520 (375) (280)	16 × 16.5 (12.5 × 13.5)	700 (420)	16 × 16.5	750		
680	681	12.5 × 13.5 (10 × 13.5)	530 (395)	16 × 16.5	750			Case size 尺寸	Ripple current 紋波電流
1000	102	16 × 16.5 (12.5 × 16)	750 (600)						

•Case size ∅D×L(mm), ripple current (mA rms) at 85°C 120Hz •尺寸∅D×L(mm)，紋波電流(mA rms)於 85°C 120Hz

□ FREQUENCY COEFFICIENT OF ALLOWABLE RIPPLE CURRENT 紋波電流頻率補償系數

Frequency 頻率			50Hz	120Hz	300Hz	1KHz	10KHz~
Coefficient 系數	Ø4 ~ Ø10	0.1 ~ 68μF	0.70	1.00	1.17	1.36	1.50
		100 ~ 3300μF	0.85	1.00	1.08	1.20	1.30
	Ø12.5 ~ Ø16	~ 68μF	0.75	1.00	1.35	1.57	2.00
		100 ~ 680μF	0.80	1.00	1.23	1.34	1.50
		1000 ~ 6800μF	0.85	1.00	1.10	1.13	1.15

- Taping specifications are given in page 11. 編帶標準請參閱第 11 頁。
- Please refer to page 12 for the minimum package quantity. 最小包裝數量請參閱第 12 頁。

NOTE: All designs and specifications are for reference only and are subject to change without prior notice. If any doubt about safety for your application, please contact us immediately for technical assistance before purchase.
注: 以上所提供的設計及特性參數僅供參考，任何修改不作預先通知。如果在使用上有疑問，請在採購前與我們聯繫，以便提供技術上的協助。

ENTEGRECİ

Bu belge www.entegreci.com üzerinden sunulmaktadır.

Elektronik komponent tedarikinde Entegreci

Entegreci, Eskişehir merkezli, Türkiye geneline satış yapan bir elektronik komponent mağazasıdır. Entegreler (IC), mikrodenetleyiciler, transistörler, diyotlar, pasif elemanlar, konnektörler, modüller ve geliştirme kartları tek adetten seri üretim adetlerine kadar satılır. Ürün sayfalarında güncel stok durumunu, fiyatı ve datasheet bağlantısını bulabilirsiniz.

Parça koduyla arama

Üretici parça numarasını yazın; stok ve fiyatı hemen görün.

www.entegreci.com

Ürün kategorileri

Entegreden kapasitöre tüm elektronik komponent kategorileri.

Kategorilere göz atın

Üreticiler

Aradığınız üreticinin ürünlerini tek sayfada inceleyin.

Üreticileri görün

Toplu alım ve teklif

Listede olmayan ya da yüksek adetli parçalar için teklif isteyin.

Teklif isteyin

www.entegreci.com | **destek@entegreci.com** | **0850 305 90 34**

Entegreci is an online electronic components store based in Türkiye. Search by manufacturer part number to see stock, prices and datasheets for integrated circuits, microcontrollers, transistors, passive components and connectors, or request a quote for parts that are not listed.

Bu sayfa Entegreci tarafından eklenmiştir. Belgenin önceki sayfaları asıl yayıncısına aittir ve içeriği değiştirilmemiştir; en güncel sürüm için belgenin yayıncısına başvurun.