BUX48/48A
BUV48A/V48AFI

HIGH POWER NPN SILICON TRANSISTORS

- STMicroelectronics PREFERRED SALESTYPES
- NPN TRANSISTOR
- HIGH VOLTAGE CAPABILITY
- HIGH CURRENT CAPABILITY
- FAST SWITCHING SPEED

APPLICATIONS
- SWITCH MODE POWER SUPPLIES
- FLYBACK AND FORWARD SINGLE TRANSISTOR LOW POWER CONVERTERS

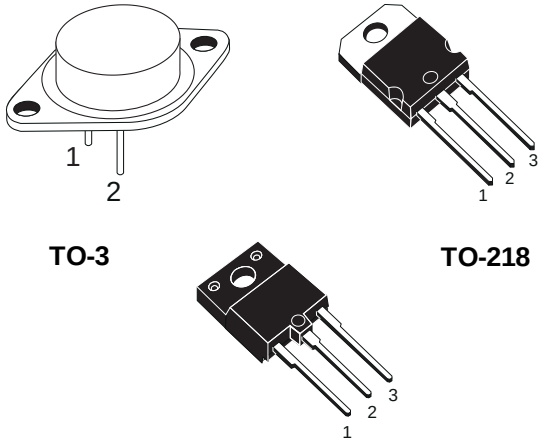

TO-3 **TO-218**

ISOWATT218

DESCRIPTION
The BUX48/A, BUV48A and BUV48AFI are silicon Multiepitaxial Mesa NPN transistors mounted respectively in TO-3 metal case, TO-218 plastic package and ISOWATT218 fully isolated package. They are particulary intended for switching and industrial applications from single and tree-phase mains.

INTERNAL SCHEMATIC DIAGRAM

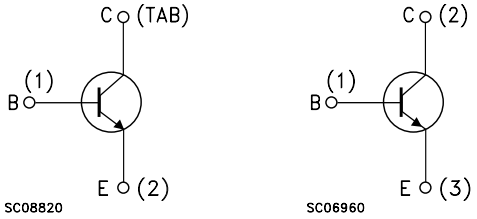

For TO-3 Package Others Packages

ABSOLUTE MAXIMUM RATINGS

Symbol	Parameter	Value			Unit
		BUX48	BUX48A BUV48A BUV48AFI		
V_{CER}	Collector-Emitter Voltage (R_{BE} = 10Ω)	850	1000		V
V_{CES}	Collector-Emitter Voltage (V_{BE} = 0)	850	1000		V
V_{CEO}	Collector-Emitter Voltage (I_B = 0)	400	450		V
V_{EBO}	Emitter-Base Voltage (I_C = 0)	7			V
I_C	Collector Current	15			A
I_{CM}	Collector Peak Current	30			A
I_{CP}	Collector Peak Current non repetitive (t_p <20µs)	55			A
I_B	Base Current	4			A
I_{BM}	Base Peak Current	20			A
		TO-3	TO-218	ISOWATT218	
P_{tot}	Total Dissipation at T_c = 25 °C	175	125	55	W
T_{stg}	Storage Temperature	-65 to200	-65 to 150	-65 to 150	°C
T_j	Max. Operating Junction Temperature	200	150	150	°C

THERMAL DATA

		TO-3	TO-218	ISOWATT218	
$R_{thj\text{-}case}$	Thermal Resistance Junction-case Max	1	1	2.2	°C/W

ELECTRICAL CHARACTERISTICS (T_{case} = 25 °C unless otherwise specified)

Symbol	Parameter	Test Conditions	Min.	Typ.	Max.	Unit
I_{CES}	Collector Cut-off Current (V_{BE} = 0)	V_{CE} = rated V_{CES} V_{CE} = rated V_{CES}, T_c = 125 °C			200 2	µA mA
I_{CER}	Collector Cut-off Current (R_{BE} = 10 Ω)	V_{CE} = rated V_{CER} V_{CE} = rated V_{CER}, T_c = 125 °C			500 4	µA mA
I_{EBO}	Emitter Cut-off Current (I_C = 0)	V_{EB} = 5 V			1	mA
$V_{CEO(SUS)}$*	Collector-Emitter Sustaining Voltage (I_B = 0)	I_C = 200 mA L= 25mH for **BUX48** for **BUX48A/V48A/V48AFI**	 400 450			 V V
V_{EBO}	Emitter-Base Voltage (I_C = 0)	I_E = 50 mA	7		30	V
$V_{CE(sat)}$*	Collector-Emitter Saturation Voltage	for **BUX48** I_C = 10 A I_B = 2 A I_C = 15 A I_B = 4 A I_C = 15 A I_B = 3 A for **BUX48A/V48A/V48AFI** I_C = 8 A I_B = 1.6 A I_C = 12 A I_B = 2.4 A			 1.5 3.5 5 1.5 5	 V V V V V
$V_{BE(sat)}$*	Base-Emitter Saturation Voltage	for **BUX48** I_C = 10 A I_B = 2 A for **BUX48A/V48A/V48AFI** I_C = 8 A I_B = 1.6 A			 1.6 1.6	 V V

* Pulsed: Pulse duration = 300 µs, duty cycle ≤ 2 %

RESISTIVE SWITCHING TIMES

Symbol	Parameter	Test Conditions	Min.	Typ.	Max.	Unit
t_{on}	Turn-on Time	for **BUX48** V_{CC} = 150 V I_C = 10 A I_{B1} = 2 A for **BUX48A/V48A/V48AFI** V_{CC} = 150 V I_C = 8 A I_{B1} = 1.6 A			 1 1	 µs µs
t_s	Storage Time	for **BUX48** V_{CC} = 150 V I_C = 10 A I_{B1} = - I_{B2} = 2 A for **BUX48A/V48A/V48AFI** V_{CC} = 150 V I_C = 8 A I_{B1} = - I_{B2} = 1.6 A			 3 3	 µs µs
t_f	Fall Time	for **BUX48** V_{CC} = 150 V I_C = 10 A I_{B1} = - I_{B2} = 2 A for **BUX48A/V48A/V48AFI** V_{CC} = 150 V I_C = 8 A I_{B1} = - I_{B2} = 1.6 A			 0.8 0.8	 µs µs

INDUCTIVE SWITCHING TIMES

Symbol	Parameter	Test Conditions	Min.	Typ.	Max.	Unit
t_s	Storage Time	for **BUX48** V_{CC} = 300 V I_C = 10 A L_B = 3 µH V_{BE} = -5 V I_{B1} = 2 A same conditions at T_c = 125 °C for **BUX48A/V48A/V48AFI** V_{CC} = 300 V I_C = 8 A L_B = 3 µH V_{BE} = -5 V I_{B1} = 1.6 A same conditions at T_c = 125 °C		 2.7 3	 5 5	 µs µs µs µs
t_f	Fall Time	for **BUX48** V_{CC} = 300 V I_C = 10 A L_B = 3 µH V_{BE} = -5 V I_{B1} = 2 A same conditions at T_c = 125 °C for **BUX48A/V48A/V48AFI** V_{CC} = 300 V I_C = 8 A L_B = 3 µH V_{BE} = -5 V I_{B1} = 1.6 A same conditions at T_c = 125 °C		 0.16 0.13	 0.4 0.4	 µs µs µs µs

TO-3 MECHANICAL DATA

DIM.	mm			inch		
	MIN.	TYP.	MAX.	MIN.	TYP.	MAX.
A	11.00		13.10	0.433		0.516
B	0.97		1.15	0.038		0.045
C	1.50		1.65	0.059		0.065
D	8.32		8.92	0.327		0.351
E	19.00		20.00	0.748		0.787
G	10.70		11.10	0.421		0.437
N	16.50		17.20	0.649		0.677
P	25.00		26.00	0.984		1.023
R	4.00		4.09	0.157		0.161
U	38.50		39.30	1.515		1.547
V	30.00		30.30	1.187		1.193

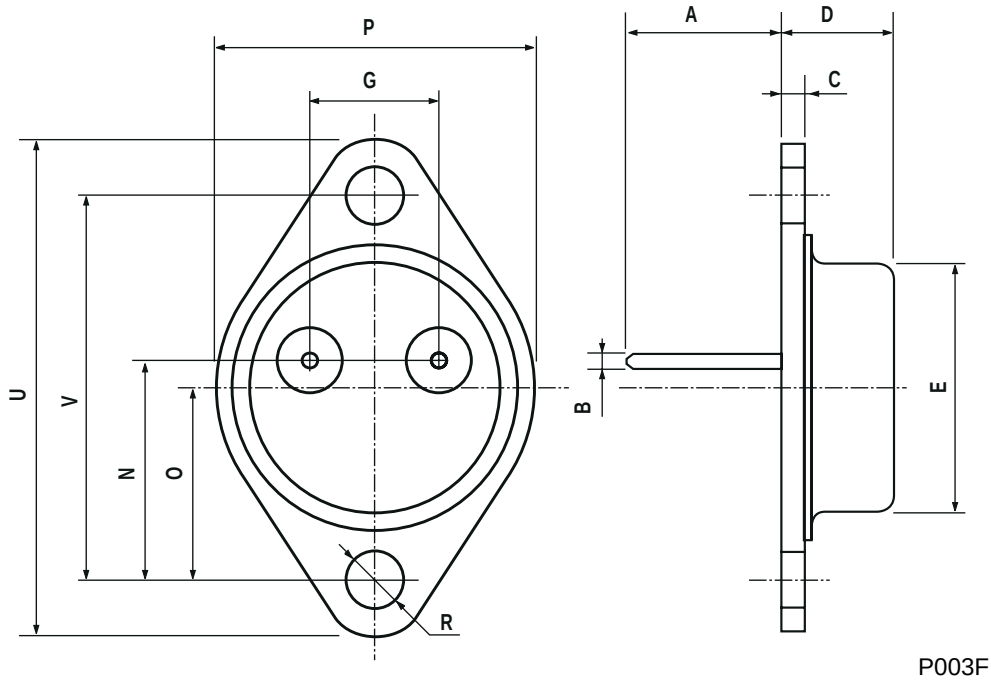

TO-218 (SOT-93) MECHANICAL DATA

DIM.	mm			inch		
	MIN.	TYP.	MAX.	MIN.	TYP.	MAX.
A	4.7		4.9	0.185		0.193
C	1.17		1.37	0.046		0.054
D		2.5			0.098	
E	0.5		0.78	0.019		0.030
F	1.1		1.3	0.043		0.051
G	10.8		11.1	0.425		0.437
H	14.7		15.2	0.578		0.598
L2	–		16.2	–		0.637
L3		18			0.708	
L5	3.95		4.15	0.155		0.163
L6		31			1.220	
R	–		12.2	–		0.480
Ø	4		4.1	0.157		0.161

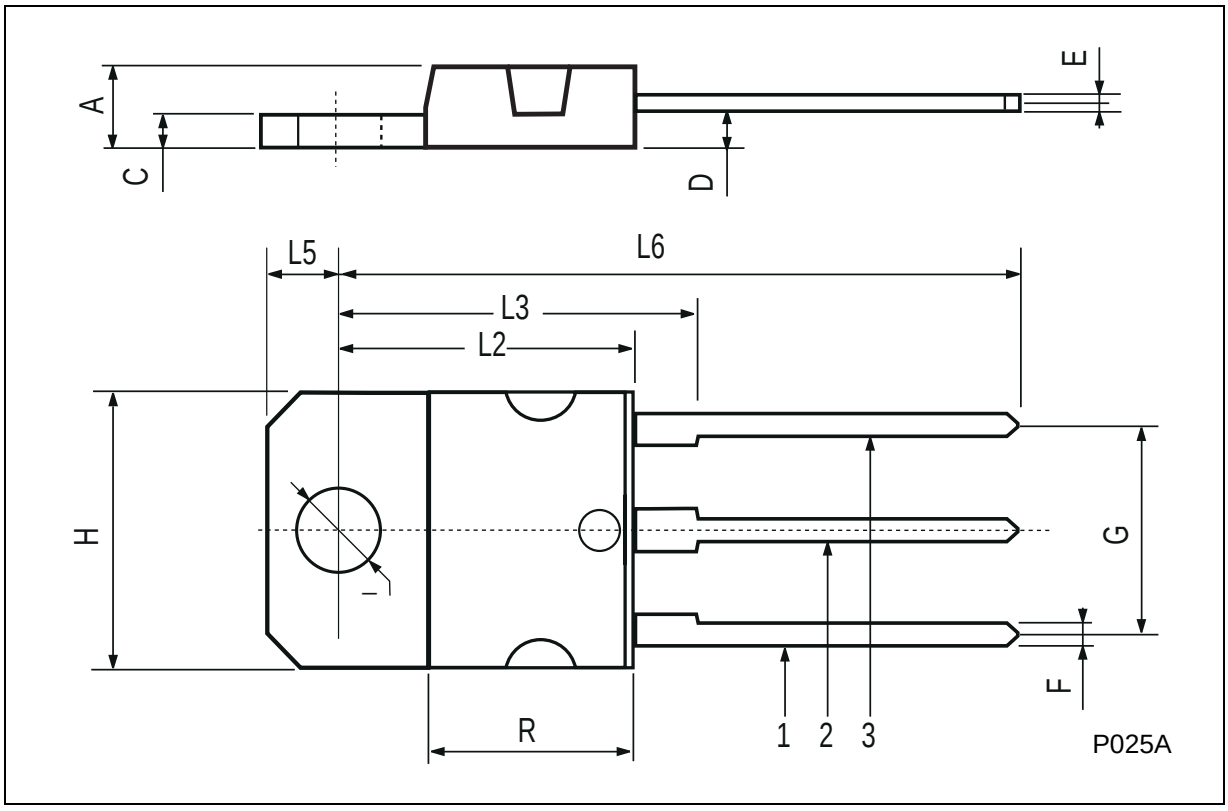

ISOWATT218 MECHANICAL DATA

DIM.	mm			inch		
	MIN.	TYP.	MAX.	MIN.	TYP.	MAX.
A	5.35		5.65	0.211		0.222
C	3.30		3.80	0.130		0.150
D	2.90		3.10	0.114		0.122
D1	1.88		2.08	0.074		0.082
E	0.75		0.95	0.030		0.037
F	1.05		1.25	0.041		0.049
F2	1.50		1.70	0.059		0.067
F3	1.90		2.10	0.075		0.083
G	10.80		11.20	0.425		0.441
H	15.80		16.20	0.622		0.638
L		9			0.354	
L1	20.80		21.20	0.819		0.835
L2	19.10		19.90	0.752		0.783
L3	22.80		23.60	0.898		0.929
L4	40.50		42.50	1.594		1.673
L5	4.85		5.25	0.191		0.207
L6	20.25		20.75	0.797		0.817
N	2.1		2.3	0.083		0.091
R		4.6			0.181	
DIA	3.5		3.7	0.138		0.146

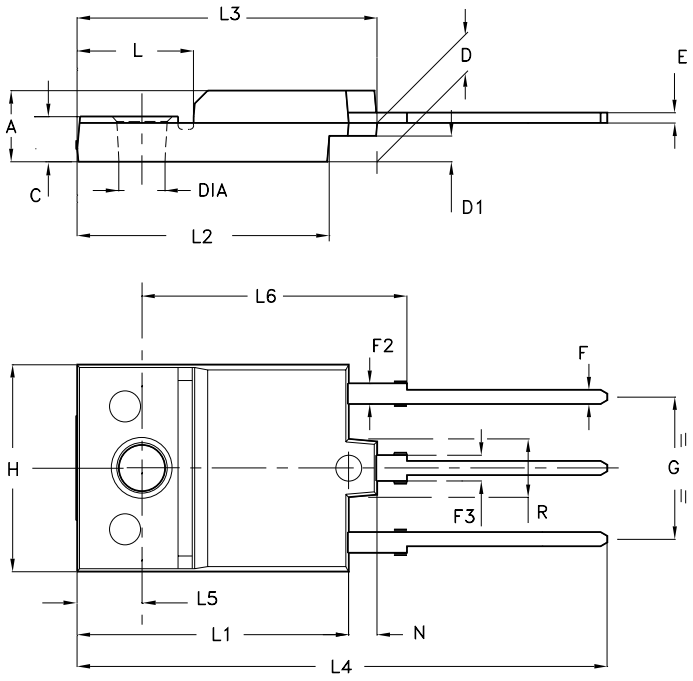

- Weight : 4.9 g (typ.)
- Maximum Torque (applied to mounting flange) Recommended: 0.8 Nm; Maximum: 1 Nm
- The side of the dissipator must be flat within 80 μm

P025C/A

Information furnished is believed to be accurate and reliable. However, STMicroelectronics assumes no responsibility for the consequences of use of such information nor for any infringement of patents or other rights of third parties which may result from its use. No license is granted by implication or otherwise under any patent or patent rights of STMicroelectronics. Specification mentioned in this publication are subject to change without notice. This publication supersedes and replaces all information previously supplied. STMicroelectronics products are not authorized for use as critical components in life support devices or systems without express written approval of STMicroelectronics.

The ST logo is a trademark of STMicroelectronics

© 2000 STMicroelectronics – Printed in Italy – All Rights Reserved

STMicroelectronics GROUP OF COMPANIES

Australia - Brazil - China - Finland - France - Germany - Hong Kong - India - Italy - Japan - Malaysia - Malta - Morocco - Singapore - Spain - Sweden - Switzerland - United Kingdom - U.S.A.

http://www.st.com

ENTEGRECİ

Bu belge www.entegreci.com üzerinden sunulmaktadır.

Elektronik komponent tedarikinde Entegreci

Entegreci, Eskişehir merkezli, Türkiye geneline satış yapan bir elektronik komponent mağazasıdır. Entegreler (IC), mikrodenetleyiciler, transistörler, diyotlar, pasif elemanlar, konnektörler, modüller ve geliştirme kartları tek adetten seri üretim adetlerine kadar satılır. Ürün sayfalarında güncel stok durumunu, fiyatı ve datasheet bağlantısını bulabilirsiniz.

Parça koduyla arama

Üretici parça numarasını yazın; stok ve fiyatı hemen görün.

www.entegreci.com

Ürün kategorileri

Entegreden kapasitöre tüm elektronik komponent kategorileri.

Kategorilere göz atın

Üreticiler

Aradığınız üreticinin ürünlerini tek sayfada inceleyin.

Üreticileri görün

Toplu alım ve teklif

Listede olmayan ya da yüksek adetli parçalar için teklif isteyin.

Teklif isteyin

www.entegreci.com | **destek@entegreci.com** | **0850 305 90 34**

Entegreci is an online electronic components store based in Türkiye. Search by manufacturer part number to see stock, prices and datasheets for integrated circuits, microcontrollers, transistors, passive components and connectors, or request a quote for parts that are not listed.

Bu sayfa Entegreci tarafından eklenmiştir. Belgenin önceki sayfaları asıl yayıncısına aittir ve içeriği değiştirilmemiştir; en güncel sürüm için belgenin yayıncısına başvurun.