Silicon diffused power transistors — BU508A; BU508D

High-voltage, high-speed switching npn transistor in SOT93A envelope intended for use in horizontal deflection circuits of colour television receivers. The BU508D has an integrated efficiency diode.

QUICK REFERENCE DATA

Collector-emitter voltage peak value; V_{BE} = 0	V_{CESM}	max.	1500 V
Collector-emitter voltage (open base)	V_{CEO}	max.	700 V
Collector current (DC)	I_C	max.	8 A
Collector current peak value	I_{CM}	max.	15 A
Total power dissipation up to T_{mb} = 25 °C	P_{tot}	max.	125 W
Collector-saturation voltage I_C = 4.5 A; I_B = 2 A	V_{CEsat}	max.	1 V
Saturation collector current	I_{Csat}	typ.	4.5 A
Diode forward voltage (BU508D) I_F = 4.5 A	V_F	typ.	1.6 V
Fall time I_{CM} = 4.5 A; $I_{B(on)}$ = 1.4 A	t_f	typ.	0.7 μs

MECHANICAL DATA

Dimensions in mm

Fig. 1 SOT93A.

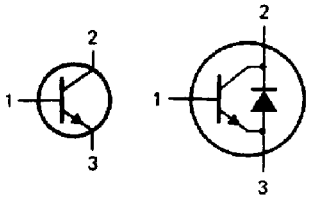

BU508A BU508D

1 = base
2 = collector
3 = emitter

Collector connected to mounting base.

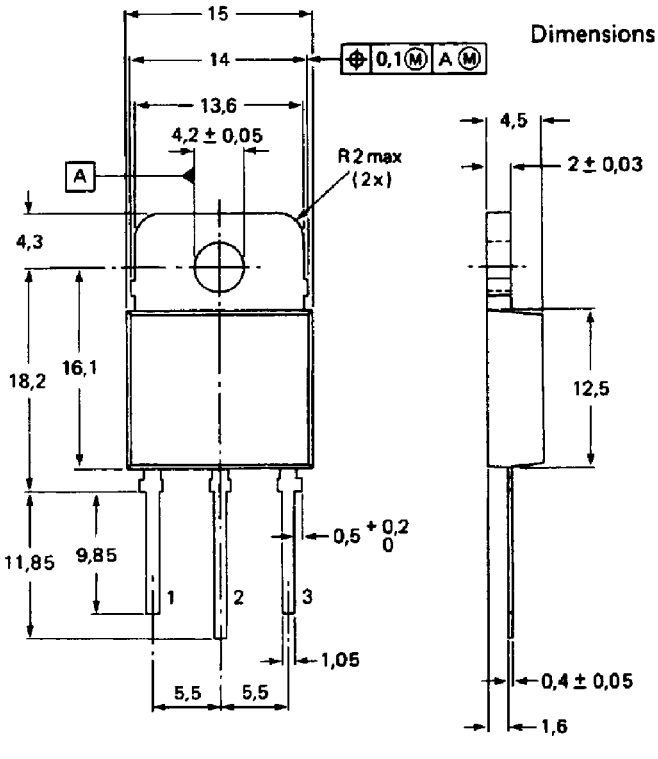

Printed From CAPS XPert Version 1.2P This Material Copyrighted By Philips Semiconductors.

Silicon diffused power transistors — BU508A; BU508D

RATINGS

Limiting values in accordance with the Absolute Maximum System (IEC 134)

Collector-emitter voltage peak value; $V_{BE} = 0$	V_{CESM}	max.	1500 V
Collector-emitter voltage (open base)	V_{CEO}	max.	700 V
Collector current (DC)	I_C	max.	8 A
Collector current peak value	I_{CM}	max.	15 A
Base current (DC)	I_B	max.	4 A
Base current (peak value)	I_{BM}	max.	6 A
Reverse base current (DC or average over any 20 ms period)	$-I_{B(AV)}$	max.	100 mA
Reverse base current* (peak value)	$-I_{BM}$	max.	5 A
Total power dissipation up to $T_{mb} = 25$ °C	P_{tot}	max.	125 W
Storage temperature range	T_{stg}		−65 to + 150 °C
Junction temperature	T_j	max.	150 °C

THERMAL RESISTANCE

From junction to mounting base	$R_{th\ j\text{-}mb}$	=	1 K/W

CHARACTERISTICS

$T_j = 25$ °C unless otherwise specified

Collector cut-off current**			
$V_{BE} = 0$; $V_{CE} = V_{CESMmax}$	I_{CES}	max.	1 mA
$V_{BE} = 0$; $V_{CE} = V_{CESMmax}$; $T_j = 125$ °C	I_{CES}	max.	2 mA
Emitter cut-off current			
$V_{EB} = 6$ V; $I_C = 0$	I_{EBO}	max.	10 mA
Collector-emitter sustaining voltage			
$I_B = 0$; $I_C = 100$ mA; L = 25 mH	$V_{CEOsust}$	min.	700 V
Saturation voltages			
$I_C = 4.5$ A; $I_B = 2$ A	V_{CEsat}	max.	1 V
	V_{BEsat}	max.	1.3 V
DC current gain			
$I_C = 100$ mA; $V_{CE} = 5$ V	h_{FE}	min.	6
	h_{FE}	typ.	13
	h_{FE}	max.	30
Transition frequency at f = 5 MHz			
$I_C = 0.1$ A; $V_{CE} = 5$ V	f_T	typ.	7 MHz
Collector capacitance at f = 1 MHz			
$I_E = I_e = 0$; $V_{CB} = 10$ V	C_c	typ.	125 pF

* Turn-off current.

** Measured with half-sinewave voltage (curve tracer).

7110826 0077464 2T1

Printed From CAPS XPert Version 1.2P This Material Copyrighted By Philips Semiconductors.

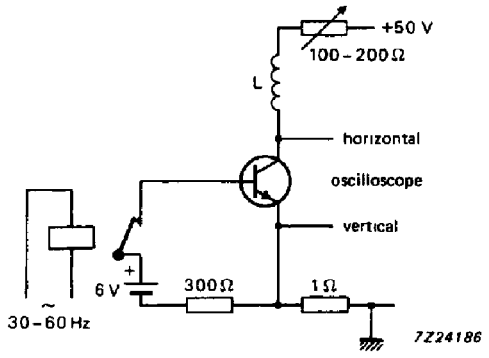

Fig. 2 Test circuit for $V_{CEOsust}$.

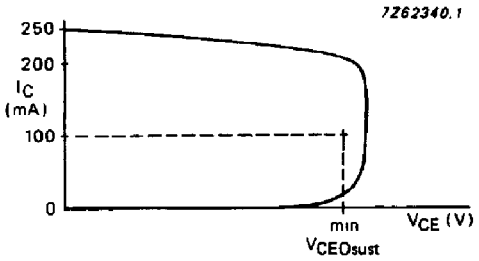

Fig. 3 Oscilloscope display for $V_{CEOsust}$.

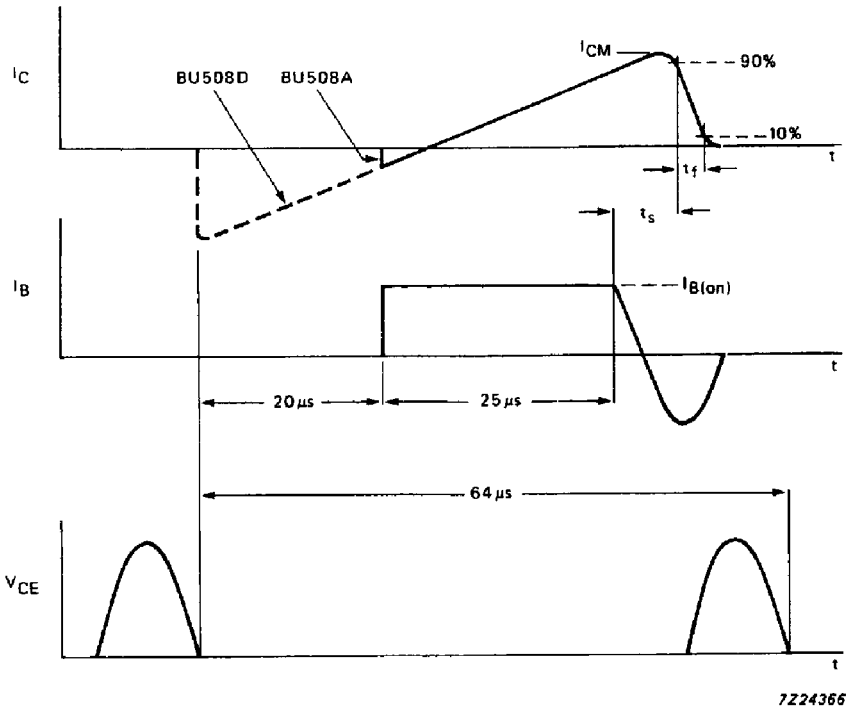

Fig. 4 Switching times waveforms; I_{CM} = 4.5 A; $I_{B(on)}$ = 1.4 A; L_B = 6 μH; $-V_{BB}$ = 4 V; $-dI_B/dt$ = 0.6 A/μs; typical value of t_s = 6.5 μs; typical value of t_f = 0.7 μs.

Printed From CAPS XPert Version 1.2P This Material Copyrighted By Philips Semiconductors.

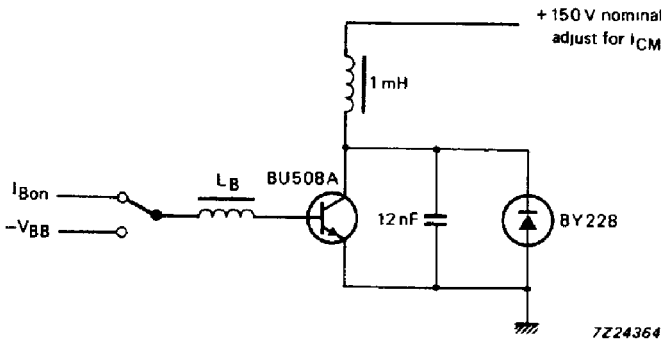

Fig. 5 Switching times test circuit (BU508A).

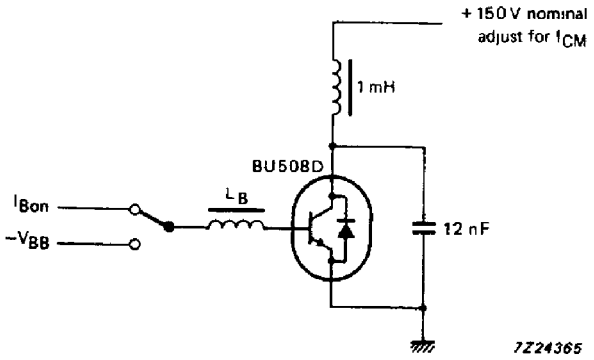

Fig. 6 Switching times test circuit (BU508D).

Printed From CAPS XPert Version 1.2P This Material Copyrighted By Philips Semiconductors.

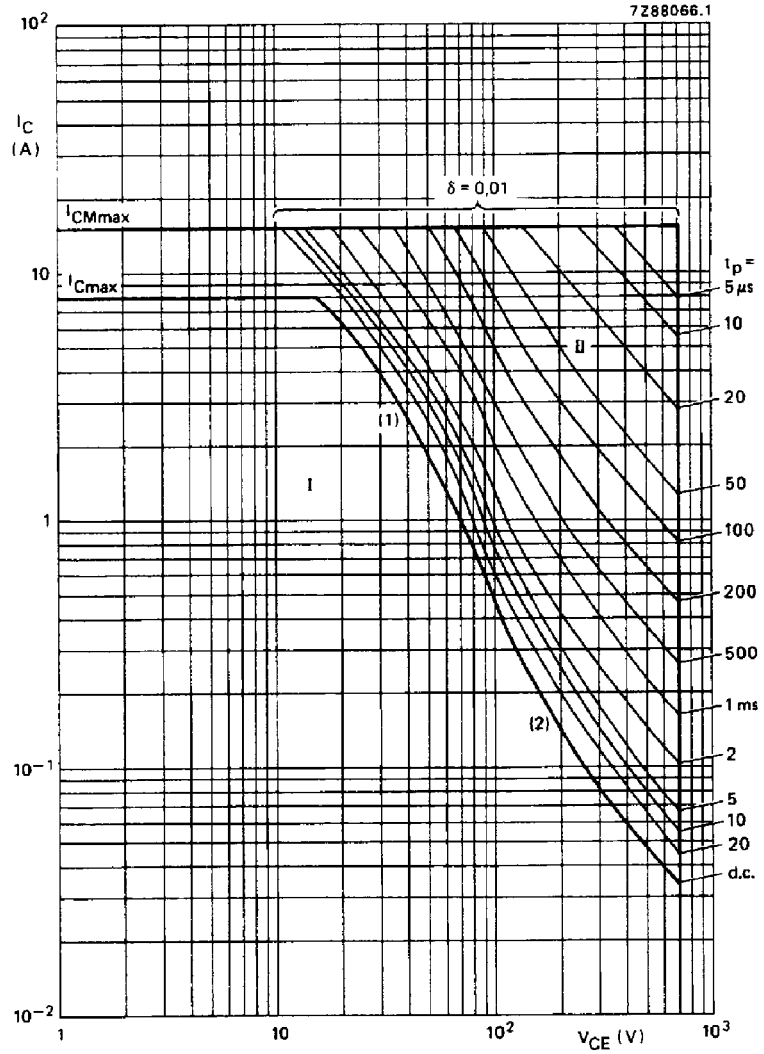

(1) $P_{tot\ max}$ line.
(2) Second-breakdown limits (independent of temperature).
I Region of permissible DC operation.
II Permissible extension for repetitive pulse operation.

Fig. 7 Safe operating area; $T_{mb} < 25$ °C.

Printed From CAPS XPert Version 1.2P This Material Copyrighted By Philips Semiconductors.

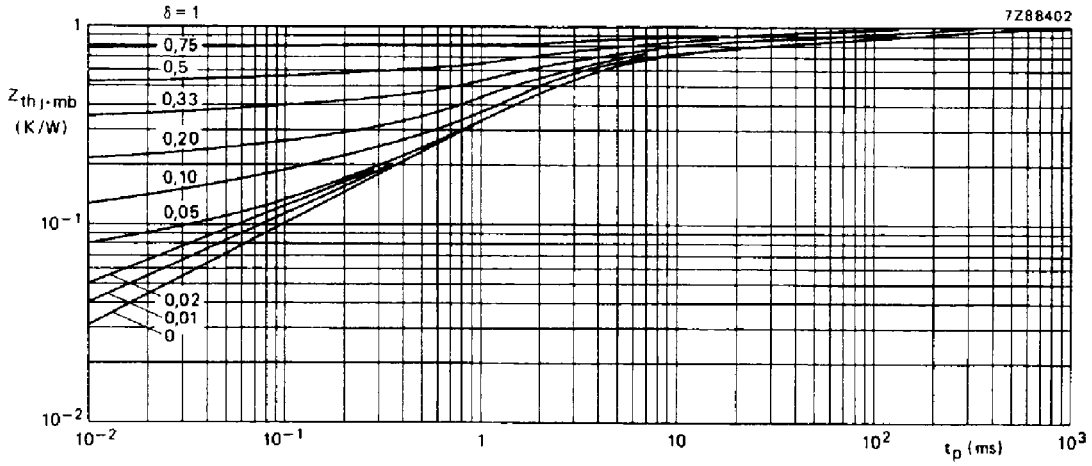

Fig. 8 Pulse power rating chart.

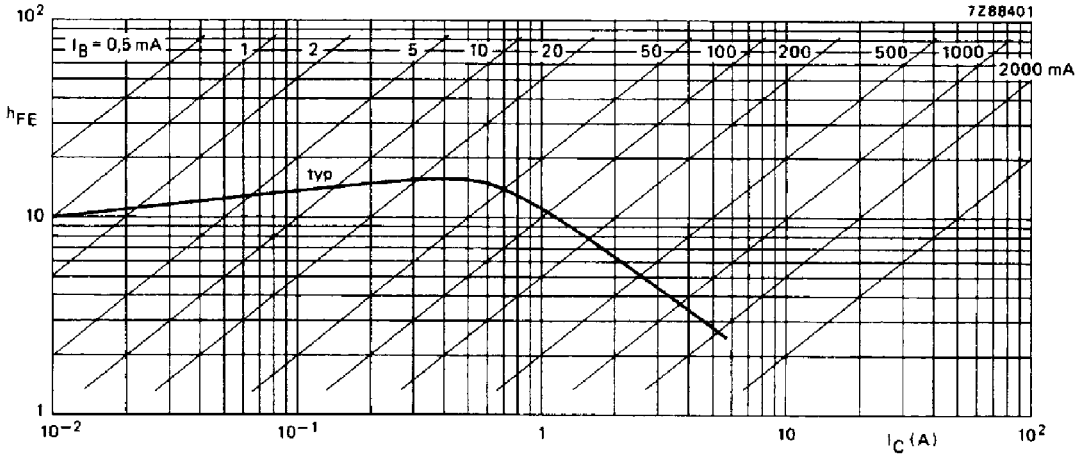

Fig. 9 Typical values DC current gain at V_{CE} = 5 V; T_{mb} = 25 °C.

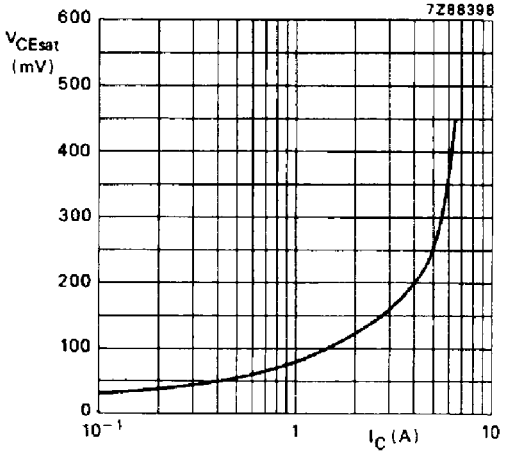

Fig. 10 Typical values I_C/I_B = 2; T_j = 25 °C.

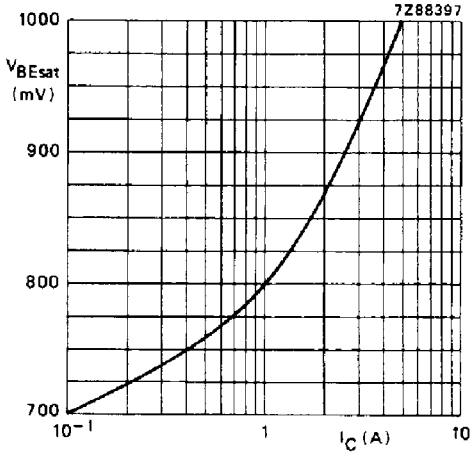

Fig. 11 Typical values I_C/I_B = 2; T_j = 25 °C.

Printed From CAPS XPert Version 1.2P This Material Copyrighted By Philips Semiconductors.

APPLICATION INFORMATION – HORIZONTAL DEFLECTION CIRCUIT WITH BU508A/D

In designing horizontal deflection circuits, allowance has to be made for component and operating spreads in order not to exceed any Absolute Maximum Rating. Extensive analysis has shown that, for the peak collector current and the collector emitter voltage of the output transistor, the total allowance need not be higher than 15% and, the following recommended base-drive and heatsink conditions are based on this figure.

To simplify the presentation the design curves given refer to nominal conditions. Where the collector current will be modulated by the E-W correction circuit the average value of the peak collector current applies, if the modulation is less than 10%.

The BU508D is a BU508A with an integrated efficiency diode without a parasitic base-emitter resistor. Therefore a circuit optimized for a BU508A can use a BU508D without alterations. N.B. if a BU508D is used total device dissipation is increased due to the integrated diode losses.

To obtain a short fall time and minimum turn-off dissipation, with a high-voltage transistor, the storage time must be sufficiently long and, during turn-off, the negative base-emitter voltage must be sufficiently high. Both requirements can easily be realized by including a small coil in series with the base of the output transistor. To reduce base current variations a series base resistor is added to most designs. This has the disadvantage of reducing the energy in the base inductance during turn-off which, in turn, reduces the negative base-emitter voltage. This with large resistor values may lead to an insufficient negative voltage for correct device turn-off. This can be improved by providing a shunt diode or capacitor in parallel with the base resistor. Instead of giving various detailed base circuits based on these considerations, it is a more direct approach to specify the recommended $-dI_B/dt$ (see Fig. 15).

The maximum transistor dissipation depends largely on the tolerance in the drive conditions. The dissipation given in Fig. 16 allows for base current and $-dI_B/dt$ tolerances of ± 15%. The curve applies to a limit-case transistor at a mounting base temperature of 85 °C. The thermal resistance for the heatsink can be calculated from:

$$R_{th\ mb\text{-}a} = \frac{85 - T_{amb\ max}}{P_{tot\ max}}$$

In which $T_{amb\ max}$ is the maximum ambient temperature of the transistor.

In order to assure a value of thermal resistance at which thermal stability is achieved, the minimum value for T_{amb} in the above equation is 45 °C.

Printed From CAPS XPert Version 1.2P This Material Copyrighted By Philips Semiconductors.

APPLICATION INFORMATION (continued)

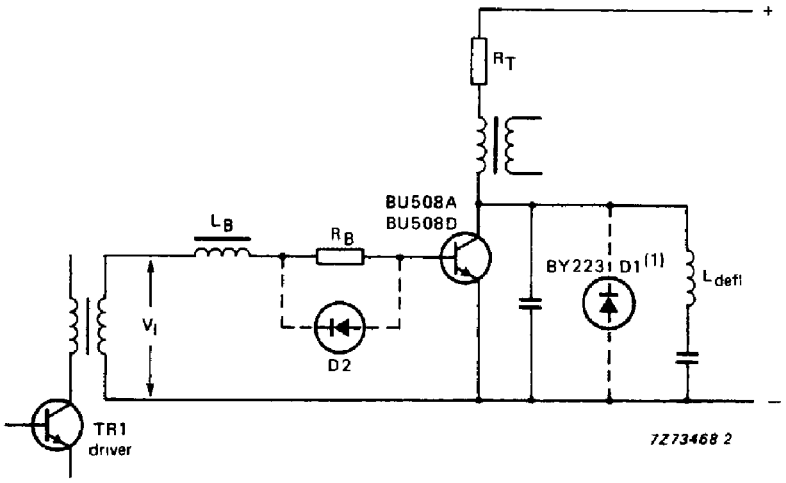

(1) Not required for this circuit when BU508D is used.

Fig. 12 Simplified horizontal deflection circuit.

Printed From CAPS XPert Version 1.2P This Material Copyrighted By Philips Semiconductors.

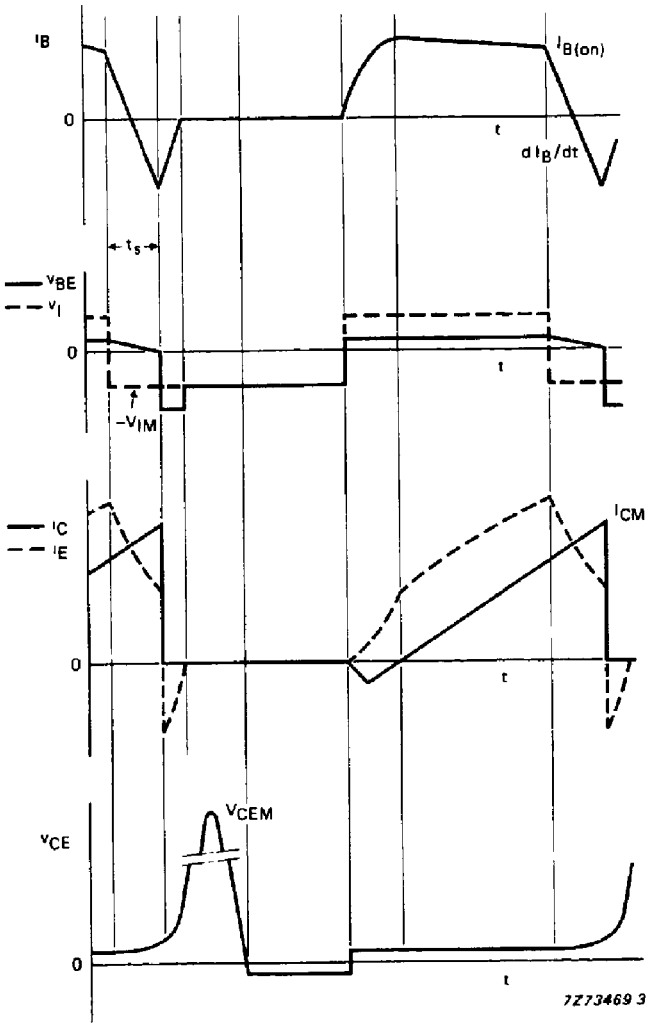

Fig. 13 Fundamental waveforms (BU508A).

Printed From CAPS XPert Version 1.2P This Material Copyrighted By Philips Semiconductors.

APPLICATION INFORMATION (continued)

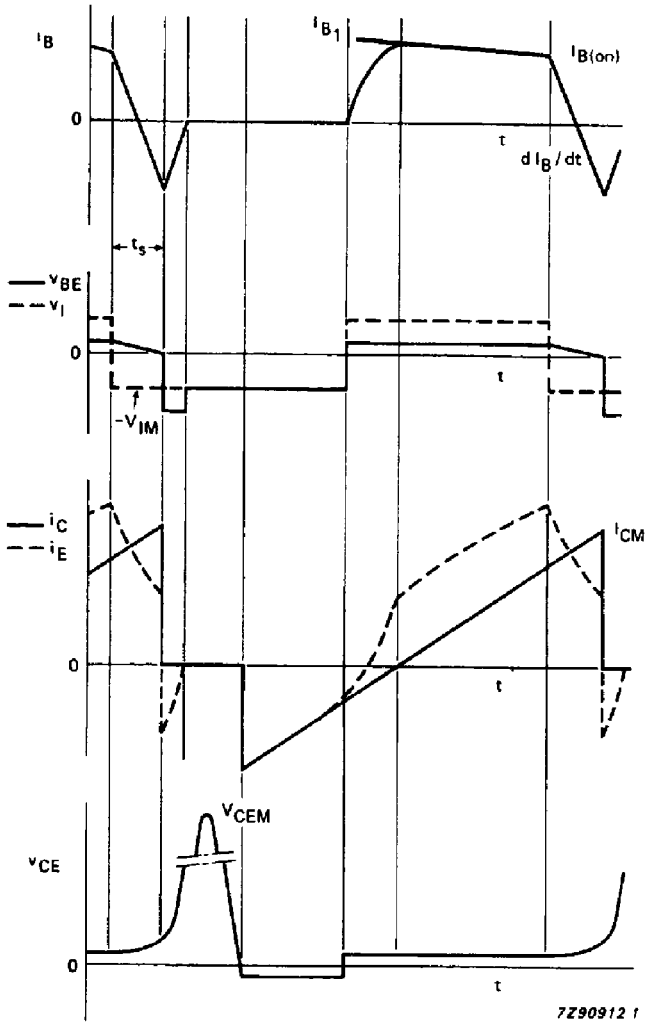

Fig. 14 Fundamental waveforms (BU508D).

Printed From CAPS XPert Version 1.2P This Material Copyrighted By Philips Semiconductors.

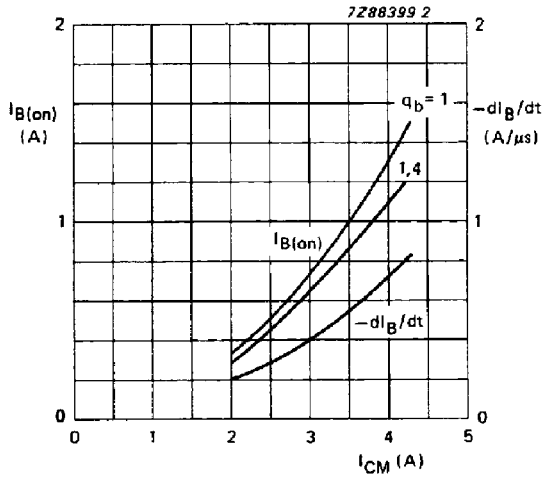

Fig. 15 Nominal end value of the base current and its rate of fall during turn-off as a function of nominal peak collector current.
A 15% spread allowance is included on these nominal values. Q_B is defined as $I_{B1}/I_{B(on)}$ (see Fig. 14).
The reverse drive voltage during the storage and fall time ($-V_{IM}$) must be > 2 V.

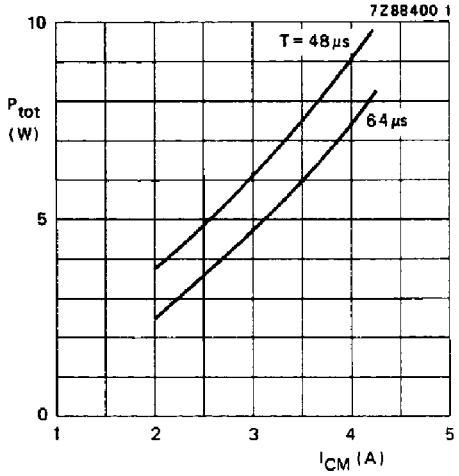

Fig. 16 Total dissipation of a limit-case transistor under maximum operating conditions for 625 and 819 lines (T_{mb} = 85 °C).

Printed From CAPS XPert Version 1.2P This Material Copyrighted By Philips Semiconductors.

ENTEGRECİ

Bu belge www.entegreci.com üzerinden sunulmaktadır.

Elektronik komponent tedarikinde Entegreci

Entegreci, Eskişehir merkezli, Türkiye geneline satış yapan bir elektronik komponent mağazasıdır. Entegreler (IC), mikrodenetleyiciler, transistörler, diyotlar, pasif elemanlar, konnektörler, modüller ve geliştirme kartları tek adetten seri üretim adetlerine kadar satılır. Ürün sayfalarında güncel stok durumunu, fiyatı ve datasheet bağlantısını bulabilirsiniz.

Parça koduyla arama

Üretici parça numarasını yazın; stok ve fiyatı hemen görün.

www.entegreci.com

Ürün kategorileri

Entegreden kapasitöre tüm elektronik komponent kategorileri.

Kategorilere göz atın

Üreticiler

Aradığınız üreticinin ürünlerini tek sayfada inceleyin.

Üreticileri görün

Toplu alım ve teklif

Listede olmayan ya da yüksek adetli parçalar için teklif isteyin.

Teklif isteyin

www.entegreci.com | **destek@entegreci.com** | **0850 305 90 34**

Entegreci is an online electronic components store based in Türkiye. Search by manufacturer part number to see stock, prices and datasheets for integrated circuits, microcontrollers, transistors, passive components and connectors, or request a quote for parts that are not listed.

Bu sayfa Entegreci tarafından eklenmiştir. Belgenin önceki sayfaları asıl yayıncısına aittir ve içeriği değiştirilmemiştir; en güncel sürüm için belgenin yayıncısına başvurun.