Smart Highside Power Switch

Features

- Overload protection
- Current limitation
- Short circuit protection
- Thermal shutdown
- Overvoltage protection (including load dump)
- Fast demagnetization of inductive loads
- Reverse battery protection[1)]
- Undervoltage and overvoltage shutdown with auto-restart and hysteresis
- Open drain diagnostic output
- Open load detection in ON-state
- CMOS compatible input
- Loss of ground and loss of V_{bb} protection
- **E**lectro**s**tatic **d**ischarge (**ESD**) protection

Product Summary

Overvoltage protection	$V_{bb(AZ)}$	43	V
Operating voltage	$V_{bb(on)}$	5.0 ... 34	V
On-state resistance	R_{ON}	60	mΩ
Load current (ISO)	$I_{L(ISO)}$	7.0	A
Current limitation	$I_{L(SCr)}$	16	A

TO-220AB/5

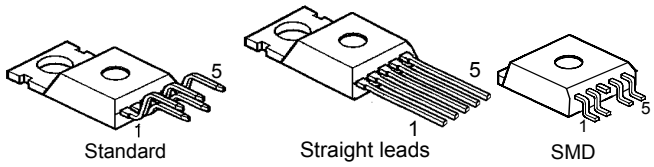

Application

- µC compatible power switch with diagnostic feedback for 12 V and 24 V DC grounded loads
- All types of resistive, inductive and capacitve loads
- Replaces electromechanical relays, fuses and discrete circuits

General Description

N channel vertical power FET with charge pump, ground referenced CMOS compatible input and diagnostic feedback, monolithically integrated in Smart SIPMOS® technology. Providing embedded protective functions.

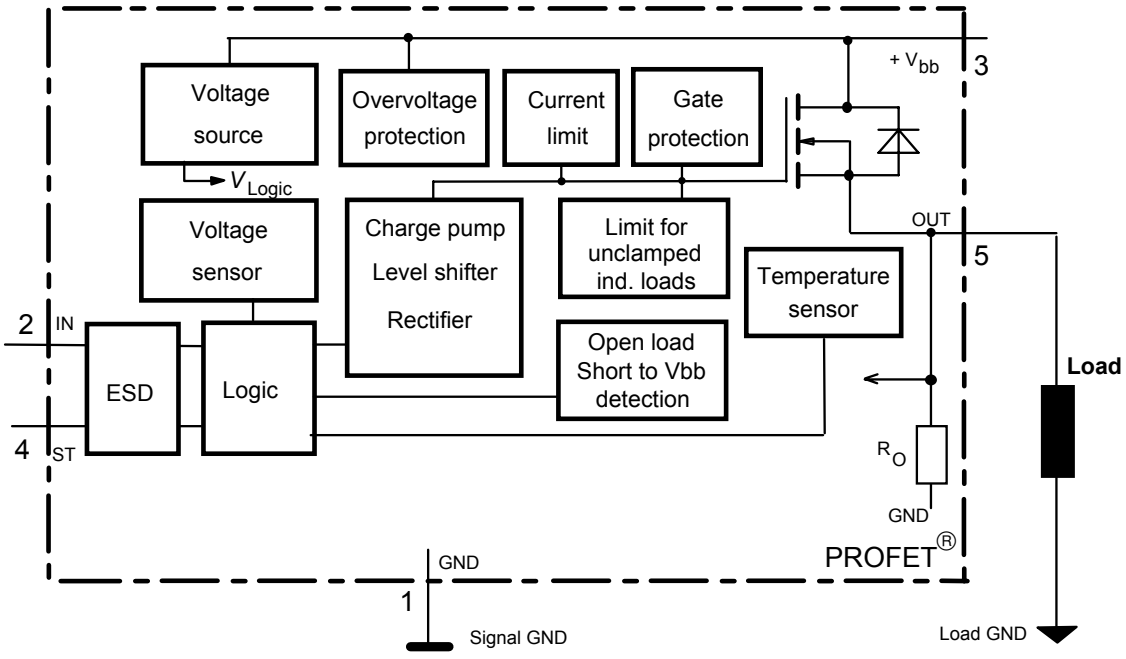

1) With external current limit (e.g. resistor R_{GND}=150 Ω) in GND connection, resistor in series with ST connection, reverse load current limited by connected load.

Pin	Symbol		Function
1	GND	-	Logic ground
2	IN	I	Input, activates the power switch in case of logical high signal
3	V_{bb}	+	Positive power supply voltage, the tab is shorted to this pin
4	ST	S	Diagnostic feedback, low on failure
5	OUT (Load, L)	O	Output to the load

Maximum Ratings at T_j = 25 °C unless otherwise specified

Parameter	Symbol	Values	Unit
Supply voltage (overvoltage protection see page 3)	V_{bb}	43	V
Supply voltage for full short circuit protection $T_{j\,Start}$=-40 ...+150°C	V_{bb}	34	V
Load dump protection[2] $V_{LoadDump} = U_A + V_s$, U_A = 13.5 V R_I[3]= 2 Ω, R_L= 1.7 Ω, t_d= 200 ms, IN= low or high	$V_{Load\,dump}$[4]	60	V
Load current (Short circuit current, see page 4)	I_L	self-limited	A
Operating temperature range Storage temperature range	T_j T_{stg}	-40 ...+150 -55 ...+150	°C
Power dissipation (DC), $T_C \leq 25$ °C	P_{tot}	75	W
Inductive load switch-off energy dissipation, single pulse V_{bb} = 12V, $T_{j,start}$ = 150°C, T_C = 150°C const. I_L = 7.0 A, Z_L = 24 mH, 0 Ω:	E_{AS}	0.74	J
Electrostatic discharge capability (ESD) IN: (Human Body Model) all other pins: acc. MIL-STD883D, method 3015.7 and ESD assn. std. S5.1-1993	V_{ESD}	1.0 2.0	kV
Input voltage (DC) Current through input pin (DC) Current through status pin (DC) see internal circuit diagrams page 6	V_{IN} I_{IN} I_{ST}	-10 ... +16 ±2.0 ±5.0	V mA

Thermal Characteristics

Parameter and Conditions	Symbol	Values			Unit
		min	typ	max	
Thermal resistance chip - case:	R_{thJC}	--	--	1.67	K/W
junction - ambient (free air):	R_{thJA}	--	--	75	
SMD version, device on PCB[5]:			34		

2) Supply voltages higher than $V_{bb(AZ)}$ require an external current limit for the GND and status pins, e.g. with a 150 Ω resistor in the GND connection and a 15 kΩ resistor in series with the status pin. A resistor for the protection of the input is integrated.

3) R_I = internal resistance of the load dump test pulse generator

4) $V_{Load\,dump}$ is setup without the DUT connected to the generator per ISO 7637-1 and DIN 40839

5) Device on 50mm*50mm*1.5mm epoxy PCB FR4 with 6cm² (one layer, 70µm thick) copper area for V_{bb} connection. PCB is vertical without blown air.

Electrical Characteristics

Parameter and Conditions at T_j = 25 °C, V_{bb} = 12 V unless otherwise specified	Symbol	Values			Unit
		min	typ	max	
Load Switching Capabilities and Characteristics					
On-state resistance (pin 3 to 5) I_L = 2 A T_j=25 °C: T_j=150 °C:	R_{ON}	--	50 100	60 120	mΩ
Nominal load current, ISO Norm (pin 3 to 5) V_{ON} = 0.5 V, T_C = 85 °C	$I_{L(ISO)}$	5.8	7.0	--	A
Output current (pin 5) while GND disconnected or GND pulled up, V_{bb}=30 V, V_{IN}= 0, see diagram page 7	$I_{L(GNDhigh)}$	--	--	10	mA
Turn-on time IN ⌐‾ to 90% V_{OUT}: Turn-off time IN ‾⌐ to 10% V_{OUT}: R_L = 12 Ω, T_j =-40...+150°C	t_{on} t_{off}	80 80	200 230	400 450	µs
Slew rate on 10 to 30% V_{OUT}, R_L = 12 Ω, T_j =-40...+150°C	dV/dt_{on}	0.1	--	1	V/µs
Slew rate off 70 to 40% V_{OUT}, R_L = 12 Ω, T_j =-40...+150°C	$-dV/dt_{off}$	0.1	--	1	V/µs
Operating Parameters					
Operating voltage[6] T_j =-40...+150°C:	$V_{bb(on)}$	5.0	--	34	V
Undervoltage shutdown T_j =-40...+150°C:	$V_{bb(under)}$	3.5	--	5.0	V
Undervoltage restart T_j =-40...+25°C: T_j =+150°C:	$V_{bb(u\ rst)}$	--	--	5.0 7.0	V
Undervoltage restart of charge pump see diagram page 12 T_j =-40...+150°C:	$V_{bb(ucp)}$	--	5.6	7.0	V
Undervoltage hysteresis $\Delta V_{bb(under)} = V_{bb(u\ rst)} - V_{bb(under)}$	$\Delta V_{bb(under)}$	--	0.2	--	V
Overvoltage shutdown T_j =-40...+150°C:	$V_{bb(over)}$	34	--	43	V
Overvoltage restart T_j =-40...+150°C:	$V_{bb(o\ rst)}$	33	--	--	V
Overvoltage hysteresis T_j =-40...+150°C:	$\Delta V_{bb(over)}$	--	0.5	--	V
Overvoltage protection[7] T_j =-40...+150°C: I_{bb}=40 mA	$V_{bb(AZ)}$	42	47	--	V
Standby current (pin 3) V_{IN}=0 T_j=-40...+25°C: T_j= 150°C:	$I_{bb(off)}$	-- --	10 12	25 28	µA
Leakage output current (included in $I_{bb(off)}$) V_{IN}=0	$I_{L(off)}$	--	--	12	µA
Operating current (Pin 1)[8], V_{IN}=5 V, T_j =-40...+150°C	I_{GND}	--	1.8	3.5	mA

6) At supply voltage increase up to V_{bb}= 5.6 V typ without charge pump, $V_{OUT} \approx V_{bb}$ - 2 V

7) See also $V_{ON(CL)}$ in table of protection functions and circuit diagram page 7.

8) Add I_{ST}, if I_{ST} > 0, add I_{IN}, if V_{IN}>5.5 V

Parameter and Conditions at T_j = 25 °C, V_{bb} = 12 V unless otherwise specified	Symbol	Values			Unit
		min	typ	max	
Protection Functions[9]					
Initial peak short circuit current limit (pin 3 to 5)	$I_{L(SCp)}$				
T_j =-40°C:		21	32	43	A
T_j =25°C:		15	25	35	
T_j =+150°C:		11	17	24	
Repetitive short circuit shutdown current limit	$I_{L(SCr)}$				
$T_j = T_{jt}$ (see timing diagrams, page 10)		--	16	--	A
Output clamp (inductive load switch off)					
at $V_{OUT} = V_{bb} - V_{ON(CL)}$ I_L= 40 mA:	$V_{ON(CL)}$	41	47	53	V
Thermal overload trip temperature	T_{jt}	150	--	--	°C
Thermal hysteresis	ΔT_{jt}	--	10	--	K
Reverse battery (pin 3 to 1) [10]	$-V_{bb}$	--	--	32	V
Reverse battery voltage drop ($V_{out} > V_{bb}$)					
I_L = -4 A T_j=150 °C:	$-V_{ON(rev)}$	--	610	--	mV
Diagnostic Characteristics					
Open load detection current T_j=-40 °C:	$I_{L(OL)}$	20	--	850	mA
(on-condition) T_j=25 ..150°C:		10	--	750	
Open load detection voltage[11] (off-condition) T_j=-40..150°C:	$V_{OUT(OL)}$	2	3	4	V
Internal output pull down					
(pin 5 to 1), V_{OUT}=5 V, T_j=-40..150°C	R_O	4	10	30	kΩ

9) Integrated protection functions are designed to prevent IC destruction under fault conditions described in the data sheet. Fault conditions are considered as "outside" normal operating range. Protection functions are not designed for continuous repetitive operation.

10) Requires 150 Ω resistor in GND connection. The reverse load current through the intrinsic drain-source diode has to be limited by the connected load. Note that the power dissipation is higher compared to normal operating conditions due to the voltage drop across the intrinsic drain-source diode. The temperature protection is not active during reverse current operation! Input and Status currents have to be limited (see max. ratings page 2 and circuit page 7).

11) External pull up resistor required for open load detection in off state.

Parameter and Conditions at T_j = 25 °C, V_{bb} = 12 V unless otherwise specified	Symbol	Values			Unit
		min	typ	max	
Input and Status Feedback[12)]					
Input resistance T_j=-40..150°C, see circuit page 6	R_I	2.5	3.5	6	kΩ
Input turn-on threshold voltage T_j =-40..+150°C:	$V_{IN(T+)}$	1.7	--	3.5	V
Input turn-off threshold voltage T_j =-40..+150°C:	$V_{IN(T-)}$	1.5	--	--	V
Input threshold hysteresis	$\Delta V_{IN(T)}$	--	0.5	--	V
Off state input current (pin 2), V_{IN} = 0.4 V, T_j =-40..+150°C	$I_{IN(off)}$	1	--	50	µA
On state input current (pin 2), V_{IN} = 3.5 V, T_j =-40..+150°C	$I_{IN(on)}$	20	50	90	µA
Delay time for status with open load after switch off (see timing diagrams, page 11), T_j =-40..+150°C	$t_{d(ST\ OL4)}$	100	520	1000	µs
Status invalid after positive input slope (open load) T_j=-40 ... +150°C:	$t_{d(ST)}$	--	250	600	µs
Status output (open drain)					
Zener limit voltage T_j =-40...+150°C, I_{ST} = +1.6 mA:	$V_{ST(high)}$	5.4	6.1	--	V
ST low voltage T_j =-40...+25°C, I_{ST} = +1.6 mA:	$V_{ST(low)}$	--	--	0.4	
T_j = +150°C, I_{ST} = +1.6 mA:		--	--	0.6	

12) If a ground resistor R_{GND} is used, add the voltage drop across this resistor.

Truth Table

	Input-level	Output level	Status 425L1 **426L1**
Normal operation	**L** **H**	**L** **H**	**H** **H**
Open load	**L** **H**	[13] **H**	**H (L[14])** **L**
Short circuit to V_{bb}	**L** **H**	**H** **H**	**L**[15] **H (L[16])**
Overtem-perature	**L** **H**	**L** **L**	**H** **L**
Undervoltage	**L** **H**	**L** **L**	**H** **H**
Overvoltage	**L** **H**	**L** **L**	**H** **H**

L = "Low" Level X = don't care Z = high impedance, potential depends on external circuit
H = "High" Level Status signal after the time delay shown in the diagrams (see fig 5. page 11...12)

Terms

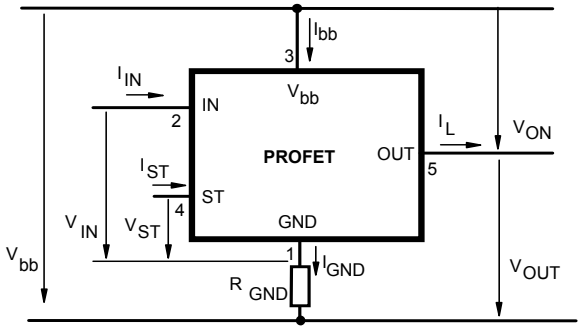

Input circuit (ESD protection)

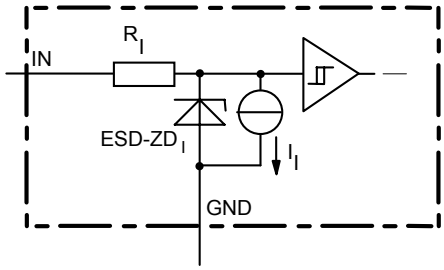

ESD zener diodes are not to be used as voltage clamp at DC conditions. Operation in this mode may result in a drift of the zener voltage (increase of up to 1 V).

13) Power Transistor off, high impedance
14) with external resistor between pin 3 and pin 5
15) An external short of output to V_{bb}, in the off state, causes an internal current from output to ground. If R_{GND} is used, an offset voltage at the GND and ST pins will occur and the $V_{ST\,low}$ signal may be errorious.
16) Low resistance to V_{bb} may be detected in ON-state by the no-load-detection

Status output

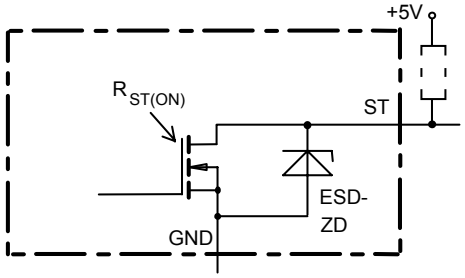

ESD-Zener diode: 6.1 V typ., max 5 mA; $R_{ST(ON)}$ < 380 Ω at 1.6 mA, ESD zener diodes are not to be used as voltage clamp at DC conditions. Operation in this mode may result in a drift of the zener voltage (increase of up to 1 V).

Inductive and overvoltage output clamp

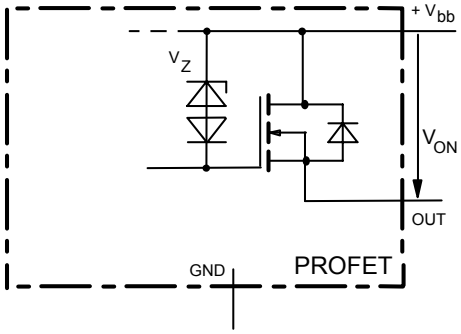

V_{ON} clamped to 47 V typ.

Overvolt. and reverse batt. protection

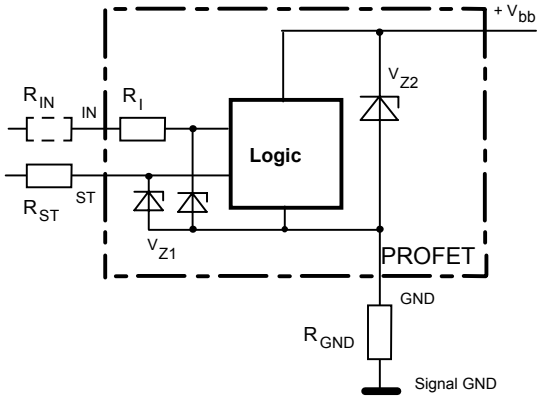

V_{Z1} = 6.2 V typ., V_{Z2} = 47 V typ., R_{GND} = 150 Ω, R_{ST}= 15 kΩ, R_I= 3.5 kΩ typ.

Open-load detection

ON-state diagnostic condition: $V_{ON} < R_{ON} * I_{L(OL)}$; IN high

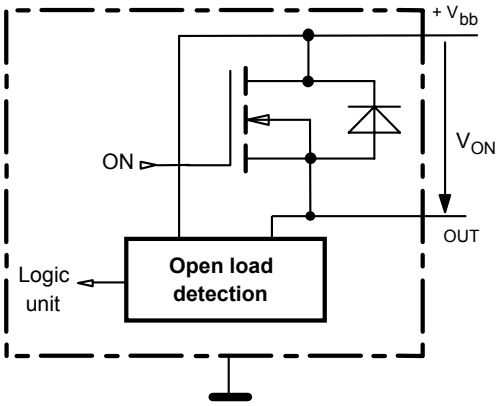

OFF-state diagnostic condition: V_{OUT} > 3 V typ.; IN low

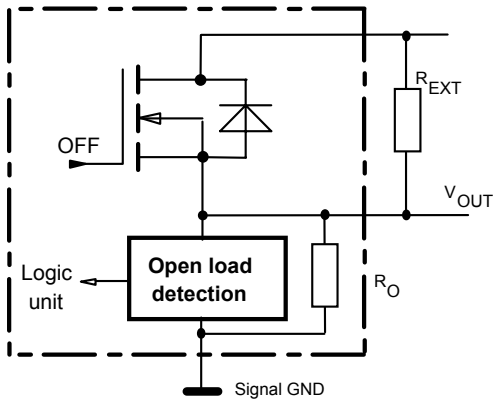

GND disconnect

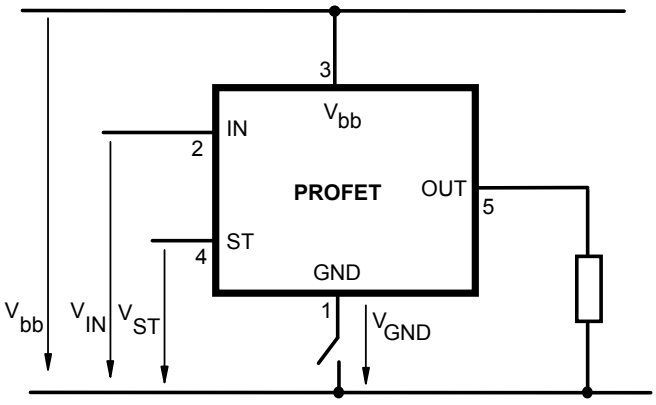

Any kind of load. In case of Input=high is $V_{OUT} \approx V_{IN} - V_{IN(T+)}$.
Due to V_{GND} >0, no V_{ST} = low signal available.

GND disconnect with GND pull up

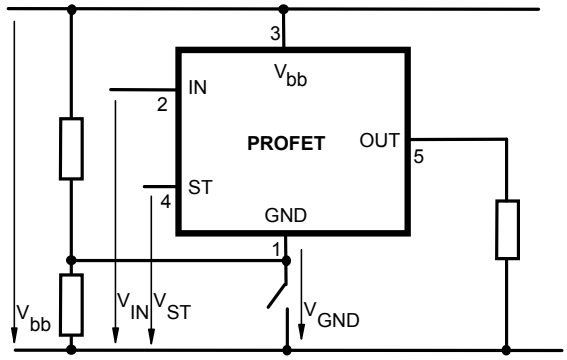

Any kind of load. If $V_{GND} > V_{IN} - V_{IN(T+)}$ device stays off
Due to $V_{GND} > 0$, no V_{ST} = low signal available.

V_{bb} disconnect with energized inductive load

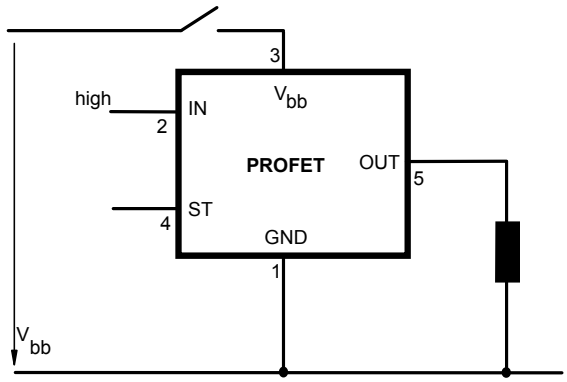

Normal load current can be handled by the PROFET itself.

V_{bb} disconnect with charged external inductive load

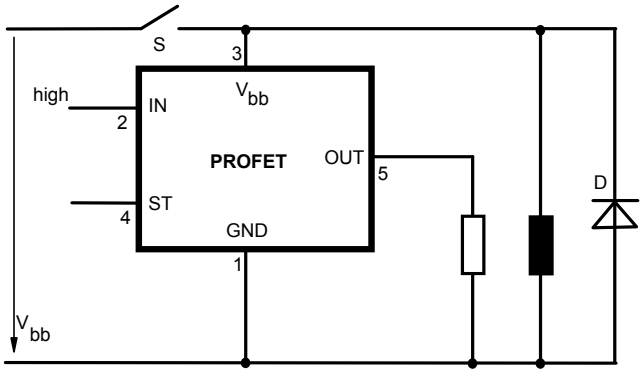

If other external inductive loads L are connected to the PROFET, additional elements like D are necessary.

Inductive Load switch-off energy dissipation

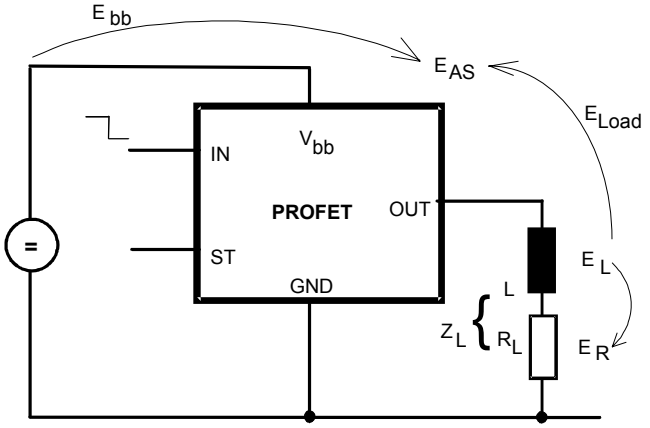

Energy stored in load inductance:

$$E_L = {}^1/_2 \cdot L \cdot I_L^2$$

While demagnetizing load inductance, the energy dissipated in PROFET is

$$E_{AS} = E_{bb} + E_L - E_R = \int V_{ON(CL)} \cdot i_L(t)\, dt,$$

with an approximate solution for $R_L > 0\,\Omega$:

$$E_{AS} = \frac{I_L \cdot L}{2 \cdot R_L} \cdot (V_{bb} + |V_{OUT(CL)}|) \cdot ln\,(1 + \frac{I_L \cdot R_L}{|V_{OUT(CL)}|})$$

Maximum allowable load inductance for a single switch off

$L = f(I_L)$; $T_{j,start} = 150°C$, $T_C = 150°C$ const.,
$V_{bb} = 12\,V$, $R_L = 0\,\Omega$

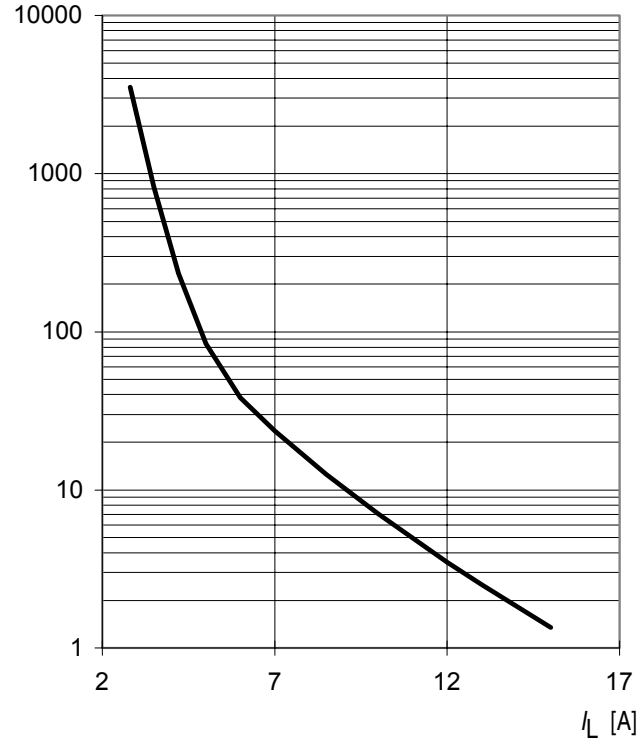

Typ. transient thermal impedance chip case

$Z_{thJC} = f(t_p) Z_{thJC}$ [K/W]

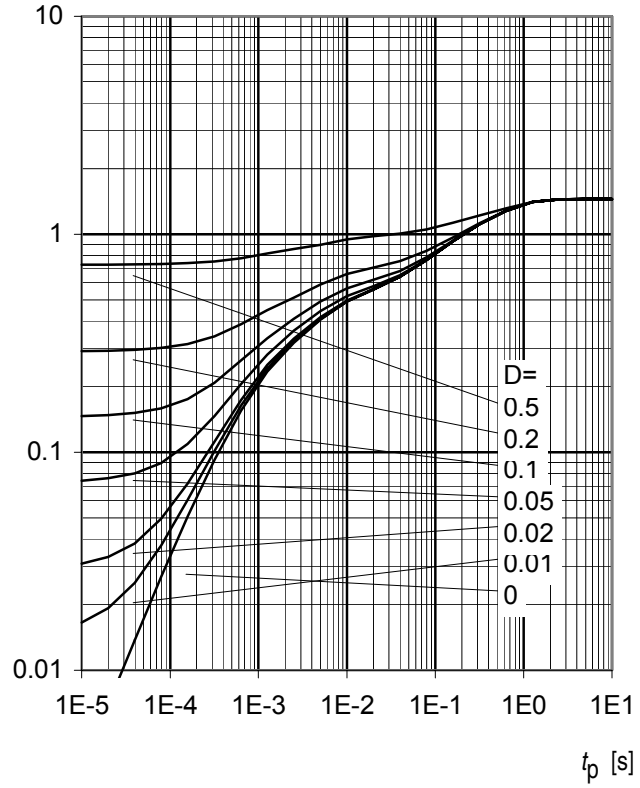

Transient thermal impedance chip ambient air

$Z_{thJA} = f(t_p) Z_{thJA}$ [K/W]

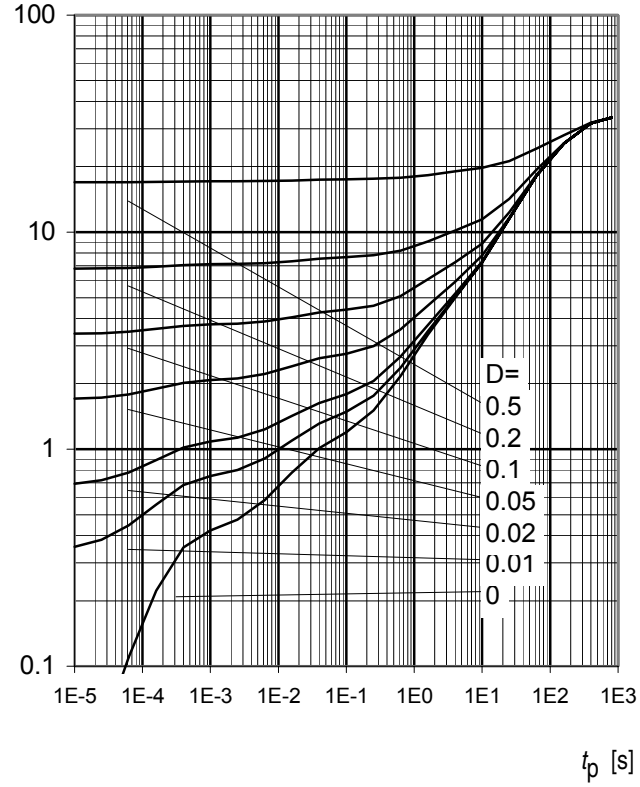

Timing diagrams

Figure 1a: V_{bb} turn on:

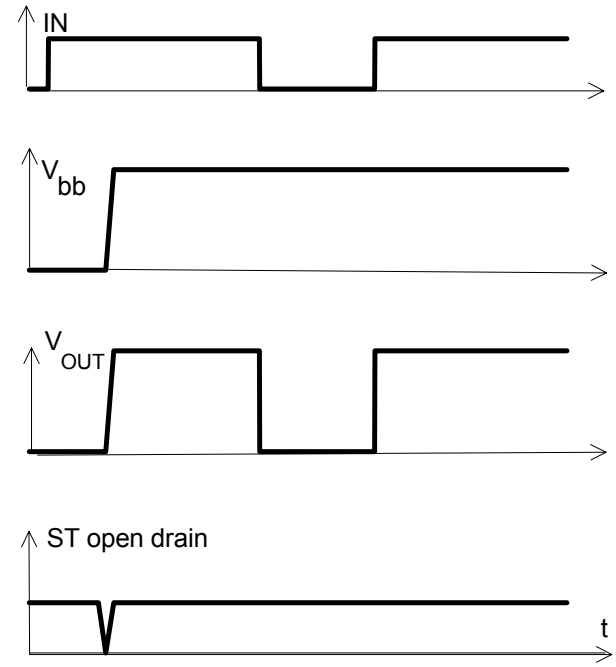

proper turn on under all conditions

Figure 2a: Switching a lamp,

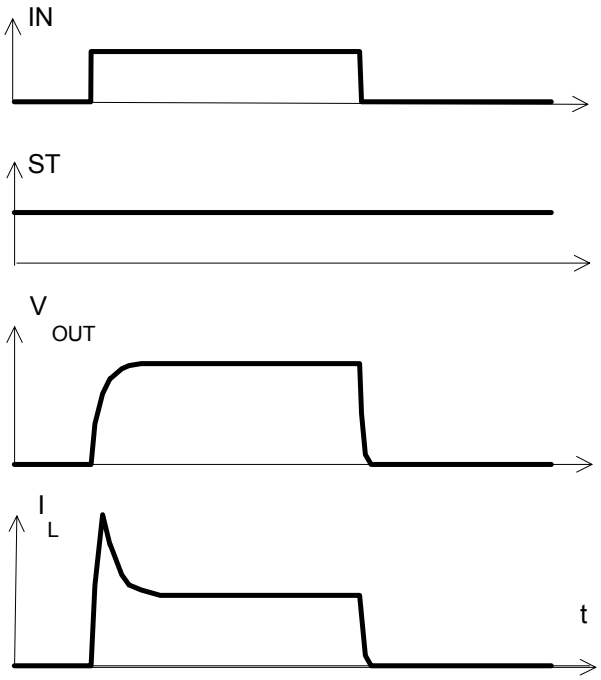

Figure 2b: Switching an inductive load

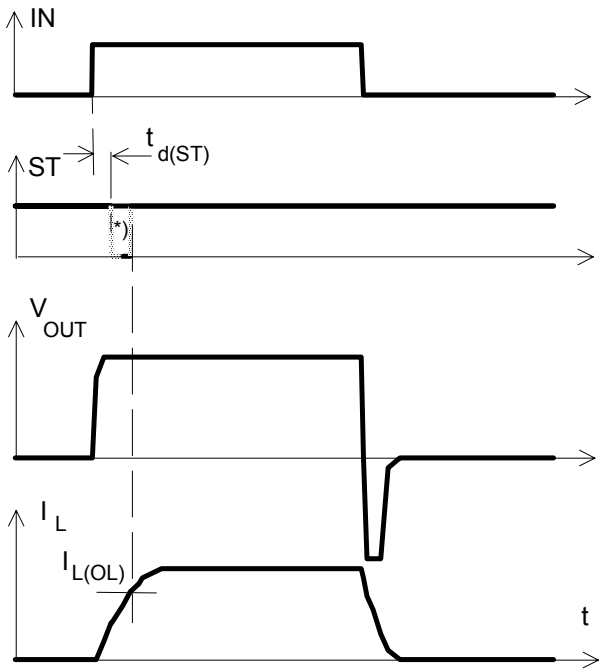

*) if the time constant of load is too large, open-load-status may occur

Figure 3a: Short circuit
shut down by overtempertature, reset by cooling

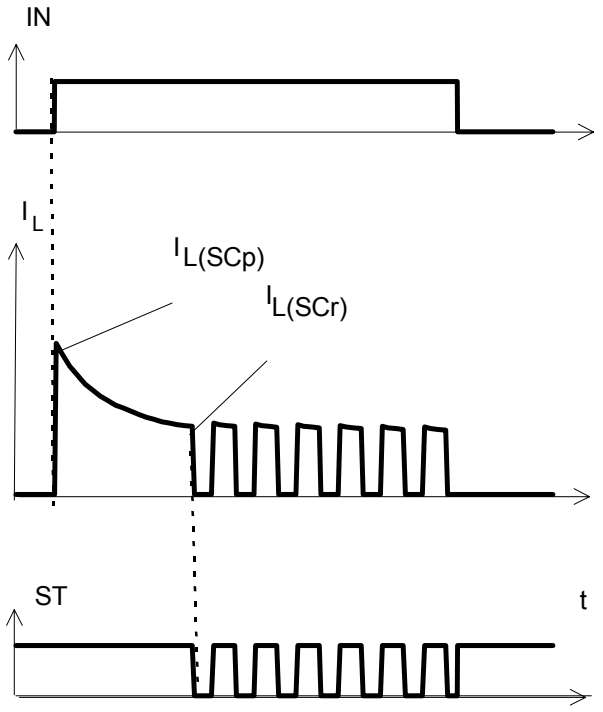

Heating up may require several milliseconds, depending on external conditions

Figure 4a: Overtemperature:
Reset if $T_j < T_{jt}$

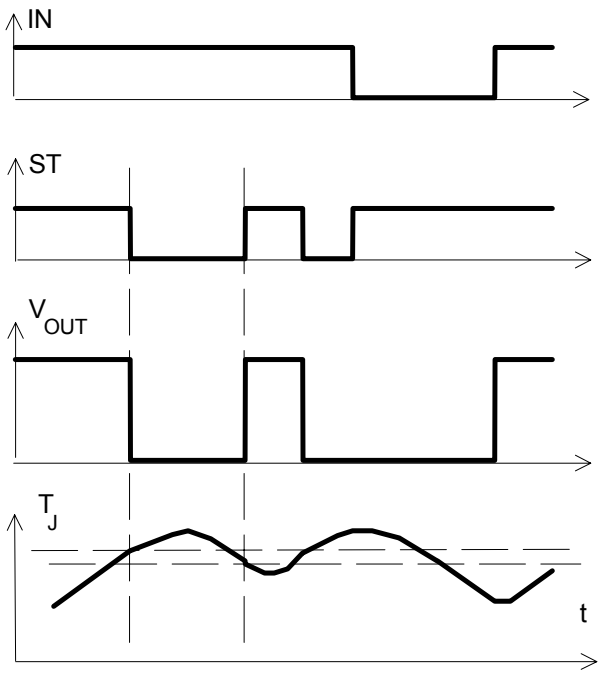

Figure 5a: Open load: detection in ON-state, turn on/off to open load

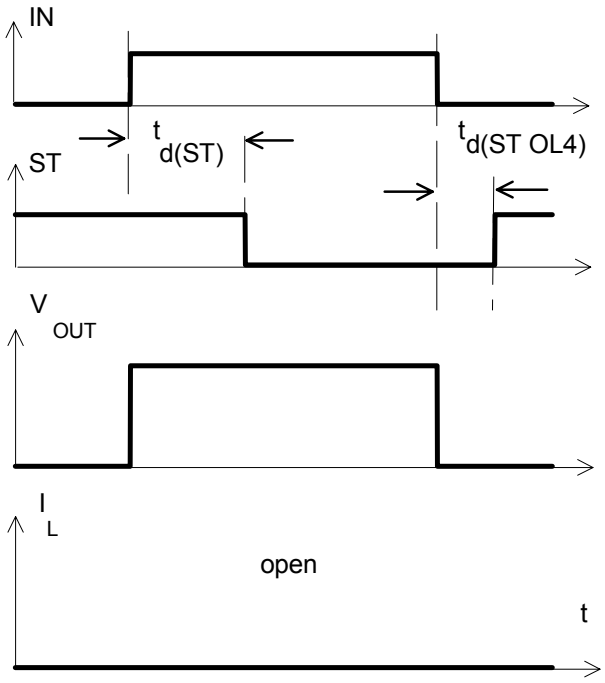

The status delay time $t_{d(ST\ OL4)}$ allows to ditinguish between the failure modes "open load" and "overtemperature".

Figure 5b: Open load: detection in ON-state, open load occurs in on-state

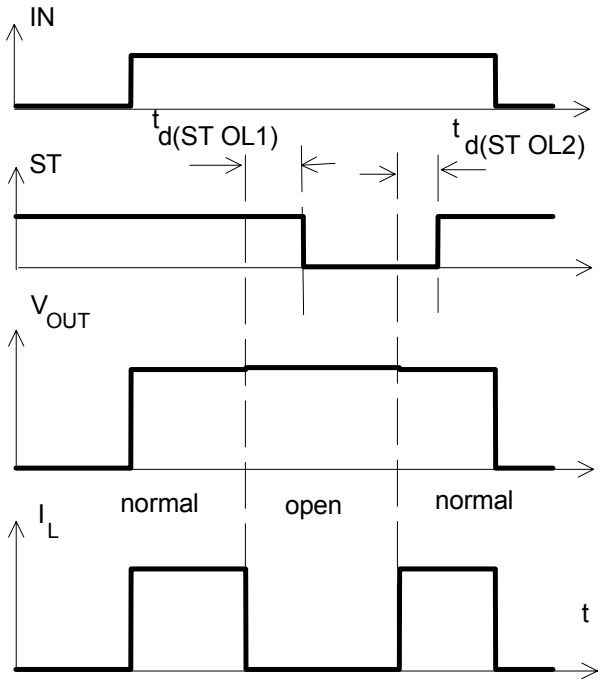

$t_{d(ST\ OL1)}$ = 20 µs typ., $t_{d(ST\ OL2)}$ = 10 µs typ

Figure 5c: Open load: detection in ON- and OFF-state (with R_{EXT}), turn on/off to open load

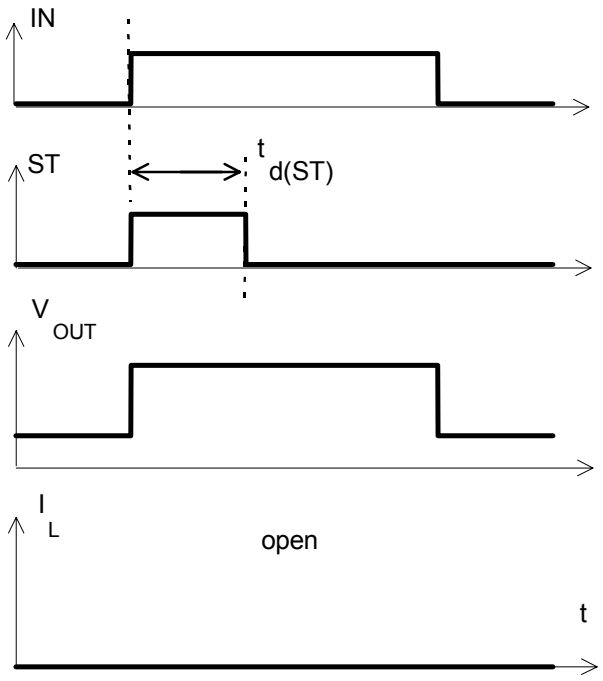

Figure 6a: Undervoltage:

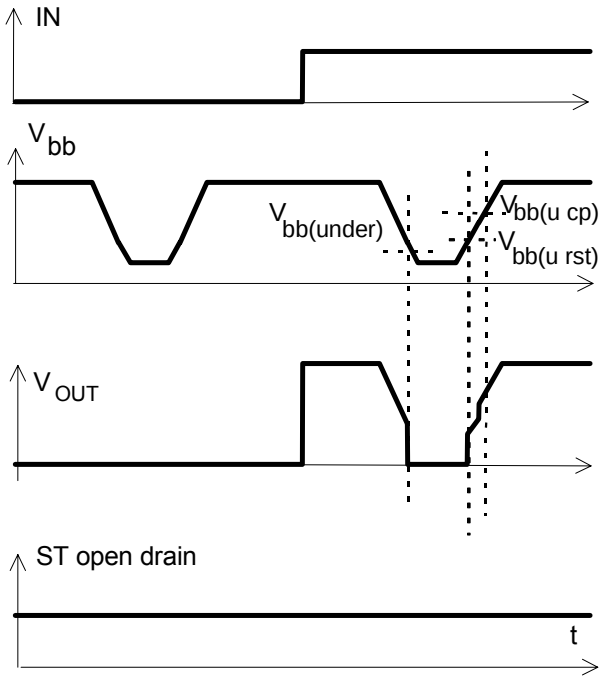

Figure 7a: Overvoltage:

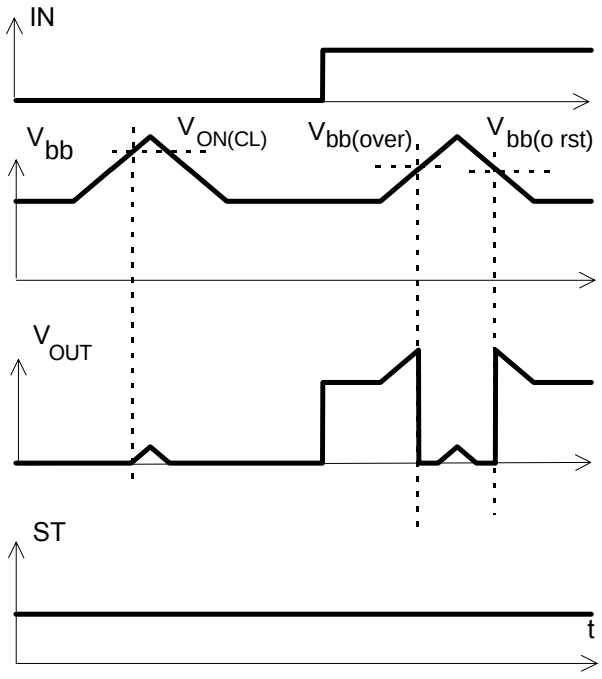

Figure 6b: Undervoltage restart of charge pump

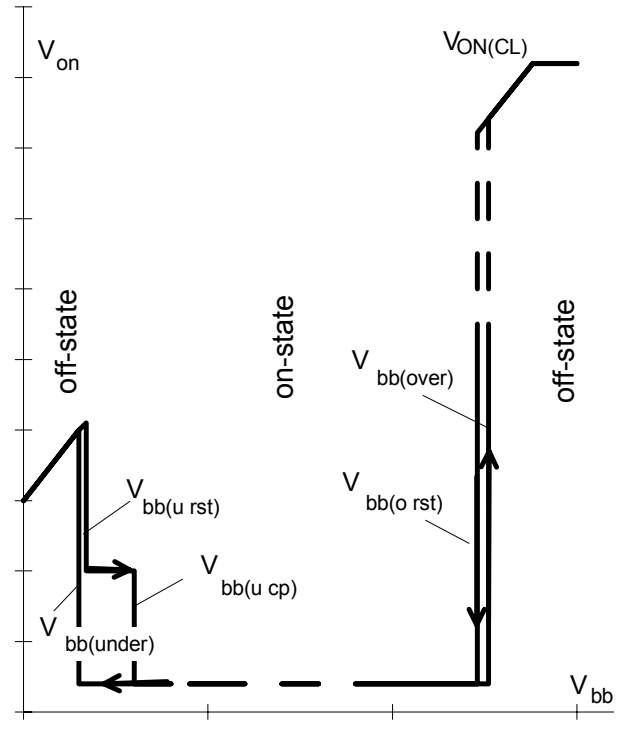

charge pump starts at $V_{bb(ucp)}$ =5.6 V typ.

Package and Ordering Code

All dimensions in mm

Standard TO-220AB/5

Ordering code	
BTS426L1	Q67060-S6108-A2

SMD TO-220AB/5, Opt. E3062

Ordering code		
BTS426L1 E3062A	T&R:	Q67060-S6108-A4

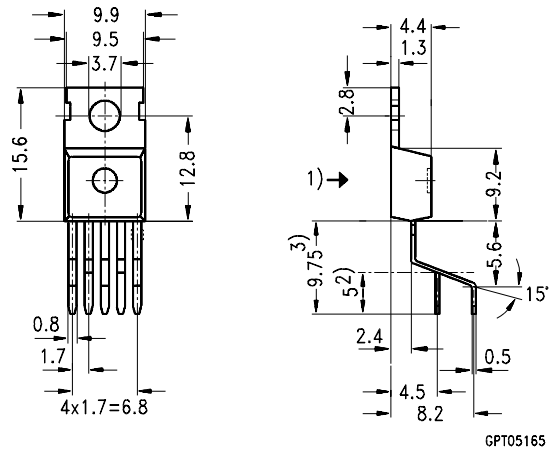

1) shear and punch direction no burrs this surface
2) min. length by tinning
3) max. 11 mm allowable by tinning

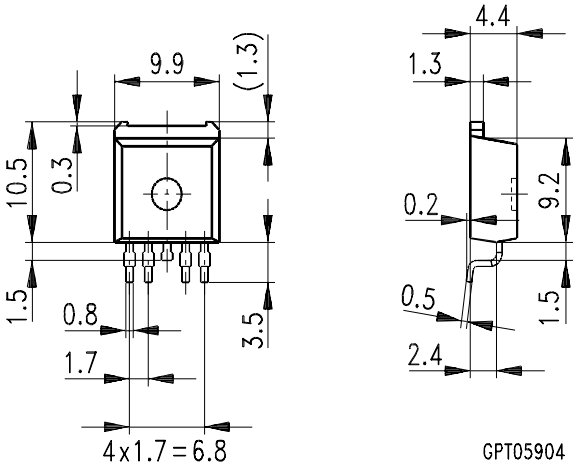

TO-220AB/5, Option E3043

Ordering code	
BTS426L1 E3043	Q67060-S6108-A3

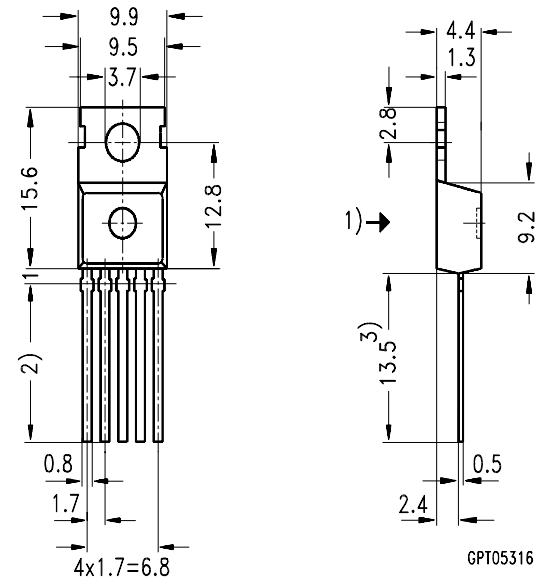

1) punch direction, burr max. 0.04
2) dip tinning
3) max. 14.5 by dip tinning press burr max. 0.05

Changed since 04.96

Date	Change
Dec 1996	$t_{d(ST\ OL4)}$ max reduced from 1500 to 800µs, typical from 400 to 320µs, min limit unchanged
	E_{AS} maximum rating and diagram added
	Zth specification added
	Typ. reverse battery voltage drop - VON(rev) added

Published by
Infineon Technologies AG,
St.-Martin-Strasse 53,
D-81669 München
© Infineon Technologies AG 2001
All Rights Reserved.

Attention please!

The information herein is given to describe certain components and shall not be considered as a guarantee of characteristics.

Terms of delivery and rights to technical change reserved.

We hereby disclaim any and all warranties, including but not limited to warranties of non-infringement, regarding circuits, descriptions and charts stated herein.

Infineon Technologies is an approved CECC manufacturer.

Information

For further information on technology, delivery terms and conditions and prices please contact your nearest Infineon Technologies Office in Germany or our Infineon Technologies Representatives worldwide (see address list).

Warnings

Due to technical requirements components may contain dangerous substances. For information on the types in question please contact your nearest Infineon Technologies Office.

Infineon Technologies Components may only be used in life-support devices or systems with the express written approval of Infineon Technologies, if a failure of such components can reasonably be expected to cause the failure of that life-support device or system, or to affect the safety or effectiveness of that device or system. Life support devices or systems are intended to be implanted in the human body, or to support and/or maintain and sustain and/or protect human life. If they fail, it is reasonable to assume that the health of the user or other persons may be endangered.

ENTEGRECİ

Bu belge www.entegreci.com üzerinden sunulmaktadır.

Elektronik komponent tedarikinde Entegreci

Entegreci, Eskişehir merkezli, Türkiye geneline satış yapan bir elektronik komponent mağazasıdır. Entegreler (IC), mikrodenetleyiciler, transistörler, diyotlar, pasif elemanlar, konnektörler, modüller ve geliştirme kartları tek adetten seri üretim adetlerine kadar satılır. Ürün sayfalarında güncel stok durumunu, fiyatı ve datasheet bağlantısını bulabilirsiniz.

Parça koduyla arama

Üretici parça numarasını yazın; stok ve fiyatı hemen görün.

www.entegreci.com

Ürün kategorileri

Entegreden kapasitöre tüm elektronik komponent kategorileri.

Kategorilere göz atın

Üreticiler

Aradığınız üreticinin ürünlerini tek sayfada inceleyin.

Üreticileri görün

Toplu alım ve teklif

Listede olmayan ya da yüksek adetli parçalar için teklif isteyin.

Teklif isteyin

www.entegreci.com | **destek@entegreci.com** | **0850 305 90 34**

Entegreci is an online electronic components store based in Türkiye. Search by manufacturer part number to see stock, prices and datasheets for integrated circuits, microcontrollers, transistors, passive components and connectors, or request a quote for parts that are not listed.

Bu sayfa Entegreci tarafından eklenmiştir. Belgenin önceki sayfaları asıl yayıncısına aittir ve içeriği değiştirilmemiştir; en güncel sürüm için belgenin yayıncısına başvurun.