Distributed by:

JAMECO® ELECTRONICS

**www.Jameco.com ✦ 1-800-831-4242**

The content and copyrights of the attached material are the property of its owner.

Jameco Part Number 1548140

# 6N137, HCNW137, HCNW2601, HCNW2611, HCPL-0600, HCPL-0601, HCPL-0611, HCPL-0630, HCPL-0631, HCPL-0661, HCPL-2601, HCPL-2611, HCPL-2630, HCPL-2631, HCPL-4661

High CMR, High Speed TTL Compatible Optocouplers

## Data Sheet

**Lead (Pb) Free**
**RoHS 6 fully compliant**

RoHS 6 fully compliant options available;
-xxxE denotes a lead-free product

### Description

The 6N137, HCPL-26XX/06XX/4661, HCNW137/26X1 are optically coupled gates that combine a GaAsP light emitting diode and an integrated high gain photo detector. An enable input allows the detector to be strobed. The output of the detector IC is an open collector Schottky-clamped transistor. The internal shield provides a guaranteed common mode transient immunity specification up to 15,000 V/µs at Vcm=1000V.

This unique design provides maximum ac and dc circuit isolation while achieving TTL compatibility. The optocoupler ac and dc operational parameters are guaranteed from -40°C to +85°C allowing troublefree system performance.

### Functional Diagram

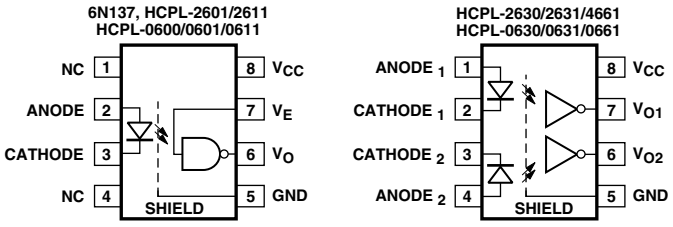


**TRUTH TABLE (POSITIVE LOGIC)**

| LED | ENABLE | OUTPUT |
|---|---|---|
| ON | H | L |
| OFF | H | H |
| ON | L | H |
| OFF | L | H |
| ON | NC | L |
| OFF | NC | H |

**TRUTH TABLE (POSITIVE LOGIC)**

| LED | OUTPUT |
|---|---|
| ON | L |
| OFF | H |

A 0.1 µF bypass capacitor must be connected between pins 5 and 8.

### Features

- 15 kV/µs minimum Common Mode Rejection (CMR) at $V_{CM}$ = 1KV for HCNW2611, HCPL-2611, HCPL-4661, HCPL-0611, HCPL-0661
- High speed: 10 MBd typical
- LSTTL/TTL compatible
- Low input current capability: 5 mA
- Guaranteed ac and dc performance over temperature: -40°C to +85°C
- Available in 8-Pin DIP, SOIC-8, widebody packages
- Strobable output (single channel products only)
- Safety approval
  UL recognized - 3750 V rms for 1 minute and 5000 Vrms* for 1 minute per UL1577 CSA approved
  IEC/EN/DIN EN 60747-5-2 approved with
  $V_{IORM}$ = 560 $V_{peak}$ for 06xx Option 060
  $V_{IORM}$ = 630 $V_{peak}$ for 6N137/26xx Option 060
  $V_{IORM}$ = 1414 $V_{peak}$ for HCNW137/26X1
- MIL-PRF-38534 hermetic version available (HCPL-56XX/66XX)

### Applications

- Isolated line receiver
- Computer-peripheral interfaces
- Microprocessor system interfaces
- Digital isolation for A/D, D/A conversion
- Switching power supply
- Instrument input/output isolation
- Ground loop elimination
- Pulse transformer replacement
- Power transistor isolation in motor drives
- Isolation of high speed logic systems

*5000 V rms/1 Minute rating is for HCNW137/26X1 and Option 020 (6N137, HCPL-2601/11/30/31, HCPL-4661) products only.

*CAUTION: It is advised that normal static precautions be taken in handling and assembly of this component to prevent damage and/or degradation which may be induced by ESD.*

The 6N137, HCPL-26XX, HCPL-06XX, HCPL-4661, HCNW137, and HCNW26X1 are suitable for high speed logic interfacing, input/output buffering, as line receivers in environments that conventional line receivers cannot tolerate and are recommended for use in extremely high ground or induced noise environments.

## Selection Guide

| Minimum CMR | | | | 8-Pin DIP (300 Mil) | | Small-Outline SO-8 | | Widebody (400 Mil) | Hermetic |
|---|---|---|---|---|---|---|---|---|---|
| dV/dt (V/µs) | $V_{CM}$ (V) | Input On-Current (mA) | Output Enable | Single Channel Package | Dual Channel Package | Single Channel Package | Dual Channel Package | Single Channel Package | Single and Dual Channel Packages |
| 1000 | 10 | 5 | YES | 6N137 | | | | | |
| 5,000 | 1,000 | 5 | YES | | | HCPL-0600 | | HCNW137 | |
| | | | NO | | HCPL-2630 | | HCPL-0630 | | |
| 10,000 | 1,000 | | YES | HCPL-2601 | | HCPL-0601 | | HCNW2601 | |
| | | | NO | | HCPL-2631 | | HCPL-0631 | | |
| 15,000 | 1,000 | | YES | HCPL-2611 | | HCPL-0611 | | HCNW2611 | |
| | | | NO | | HCPL-4661 | | HCPL-0661 | | |
| 1,000 | 50 | | YES | HCPL-2602[1] | | | | | |
| 3, 500 | 300 | | YES | HCPL-2612[1] | | | | | |
| 1,000 | 50 | 3 | YES | HCPL-261A[1] | | HCPL-061A[1] | | | |
| | | | NO | | HCPL-263A[1] | | HCPL-063A[1] | | |
| 1,000[2] | 1,000 | | YES | HCPL-261N[1] | | HCPL-061N[1] | | | |
| | | | NO | | HCPL-263N[1] | | HCPL-063N[1] | | |
| 1,000 | 50 | 12.5 | [3] | | | | | | HCPL-193X[1]<br>HCPL-56XX[1]<br>HCPL-66XX[1] |

**Notes:**

1. Technical data are on separate Avago publications.
2. 15 kV/µs with $V_{CM}$ = 1 kV can be achieved using Avago application circuit.
3. Enable is available for single channel products only, except for HCPL-193X devices.

## Ordering Information

HCPL-xxxx is UL Recognized with 3750 Vrms for 1 minute per UL1577.
HCNWxxxx is UL Rcognized with 5000 Vrms for 1 minute per UL1577.

| Part Number | Option | | Package | Surface Mount | Gull Wing | Tape & Reel | UL 5000 Vrms/ 1 Minute Rating | IEC/EN/DIN EN 60747-5-2 | Quantity |
|---|---|---|---|---|---|---|---|---|---|
| | RoHS Compliant | Non RoHS Compliant | | | | | | | |
| 6N137 | -000E | No option | 300mil DIP-8 | | | | | | 50 per tube |
| | -300E | #300 | | X | X | | | | 50 per tube |
| | -500E | #500 | | X | X | X | | | 1000 per reel |
| | -020E | #020 | | | | | X | | 50 per tube |
| | -320E | #320 | | X | X | | X | | 50 per tube |
| | -520E | #520 | | X | X | X | X | | 1000 per reel |
| | -060E | #060 | | | | | | X | 50 per tube |
| | -560E | -560 | | X | X | X | | X | 1000 per reel |
| HCPL-2601 | -000E | No option | 300mil DIP-8 | | | | | | 50 per tube |
| | -300E | #300 | | X | X | | | | 50 per tube |
| | -500E | #500 | | X | X | X | | | 1000 per reel |
| | -020E | #020 | | | | | X | | 50 per tube |
| | -320E | #320 | | X | X | | X | | 50 per tube |
| | -520E | #520 | | X | X | X | X | | 1000 per reel |
| | -060E | #060 | | | | | | X | 50 per tube |
| | -360E | - | | X | X | | | X | 50 per tube |
| HCPL-2611 | -000E | No option | 300mil DIP-8 | | | | | | 50 per tube |
| | -300E | #300 | | X | X | | | | 50 per tube |
| | -500E | #500 | | X | X | X | | | 1000 per reel |
| | -020E | #020 | | | | | X | | 50 per tube |
| | -320E | #320 | | X | X | | X | | 50 per tube |
| | -520E | #520 | | X | X | X | X | | 1000 per reel |
| | -060E | #060 | | | | | | X | 50 per tube |
| | -360E | #360 | | X | X | | | X | 50 per tube |
| | -560E | #560 | | X | X | X | | X | 1000 per reel |
| HCPL-2630 | -000E | No option | 300mil DIP-8 | | | | | | 50 per tube |
| | -300E | #300 | | X | X | | | | 50 per tube |
| | -500E | #500 | | X | X | X | | | 1000 per reel |
| | -020E | #020 | | | | | X | | 50 per tube |
| | -320E | #320 | | X | X | | X | | 50 per tube |
| | -520E | -520 | | X | X | X | X | | 1000 per reel |
| HCPL-2631 HCPL-4661 | -000E | No option | 300mil DIP-8 | | | | | | 50 per tube |
| | -300E | #300 | | X | X | | | | 50 per tube |
| | -500E | #500 | | X | X | X | | | 1000 per reel |
| | -020E | #020 | | | | | X | | 50 per tube |
| | -320E | #320 | | X | X | | X | | 50 per tube |
| | -520E | #520 | | X | X | X | X | | 1000 per reel |

| Part Number | Option: RoHS Compliant | Option: Non RoHS Compliant | Package | Surface Mount | Gull Wing | Tape & Reel | UL 5000 Vrms/ 1 Minute Rating | IEC/EN/DIN EN 60747-5-2 | Quantity |
|---|---|---|---|---|---|---|---|---|---|
| HCPL-0600 HCPL-0601 HCPL-0611 | -000E | No option | SO-8 | X | | | | | 100 per tube |
| | -500E | #500 | | X | | X | | | 1500 per reel |
| | -060E | #060 | | X | | | | X | 100 per tube |
| | -560E | #560 | | X | | X | | X | 1500 per reel |
| HCPL-0630 HCPL-0631 HCPL-0661 | -000E | No option | SO-8 | X | | | | | 100 per tube |
| | -500E | #500 | | X | | X | | | 1500 per reel |
| HCNW137 HCNW2601 HCNW2611 | -000E | No option | 400 mil DIP-8 | | | | X | X | 42 per tube |
| | -300E | #300 | | X | X | | X | X | 42 per tube |
| | -500E | #500 | | X | X | X | X | X | 750 per reel |

To order, choose a part number from the part number column and combine with the desired option from the option column to form an order entry. Combination of Option 020 and Option 060 is not available.

Example 1:

HCPL-2611-560E to order product of 300mil DIP Gull Wing Surface Mount package in Tape and Reel packag ing with IEC/EN/DIN EN 60747-5-2 Safety Approval in RoHS compliant.

Example 2:

HCPL-2630 to order product of 300mil DIP package in tube packaging and non RoHS compliant.

Option datasheets are available. Contact your Avago sales representative or authorized distributor for information.

Notes:
The notation '#XXX' is used for existing products, while (new) products launched since 15th July 2001 and RoHS compliant option will use '-XXXE'.

**Schematic**

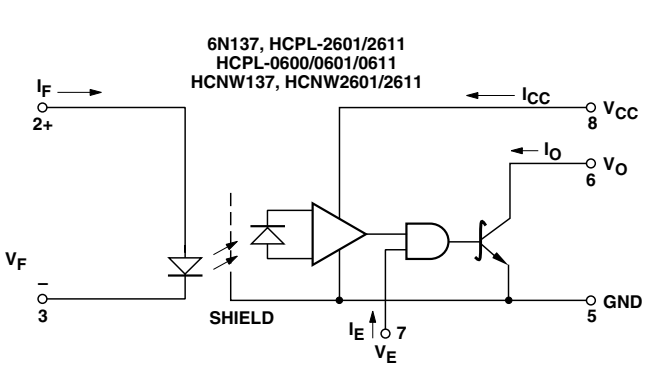


USE OF A 0.1 µF BYPASS CAPACITOR CONNECTED BETWEEN PINS 5 AND 8 IS RECOMMENDED (SEE NOTE 5).

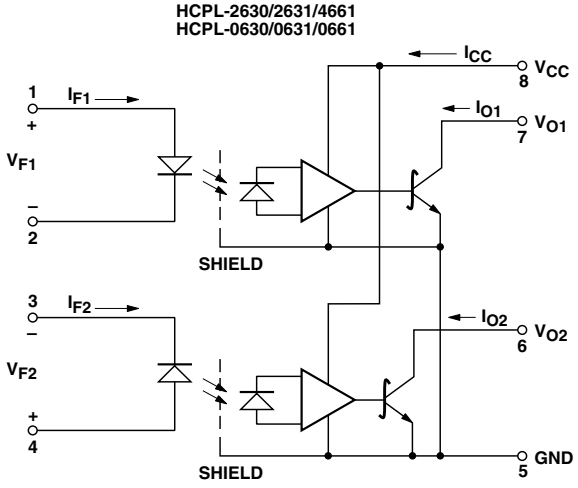

## Package Outline Drawings

### 8-pin DIP Package** (6N137, HCPL-2601/11/30/31, HCPL-4661)

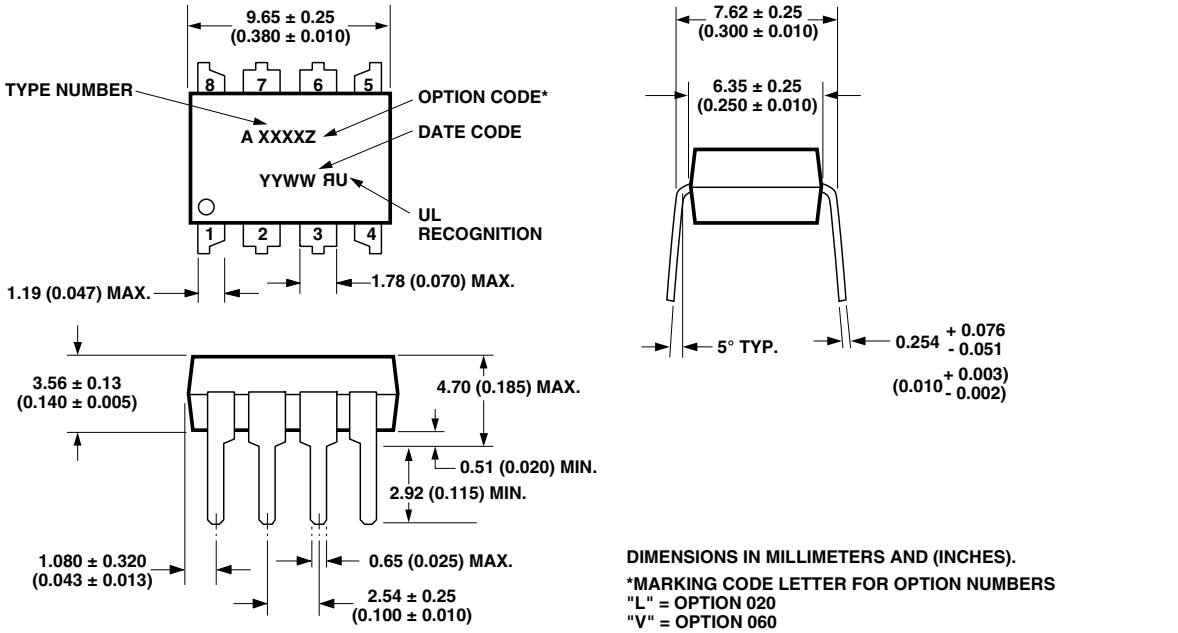


DIMENSIONS IN MILLIMETERS AND (INCHES).

*MARKING CODE LETTER FOR OPTION NUMBERS
"L" = OPTION 020
"V" = OPTION 060
OPTION NUMBERS 300 AND 500 NOT MARKED.

NOTE: FLOATING LEAD PROTRUSION IS 0.25 mm (10 mils) MAX.

**JEDEC Registered Data (for 6N137 only).

### 8-pin DIP Package with Gull Wing Surface Mount Option 300 (6N137, HCPL-2601/11/30/31, HCPL-4661)

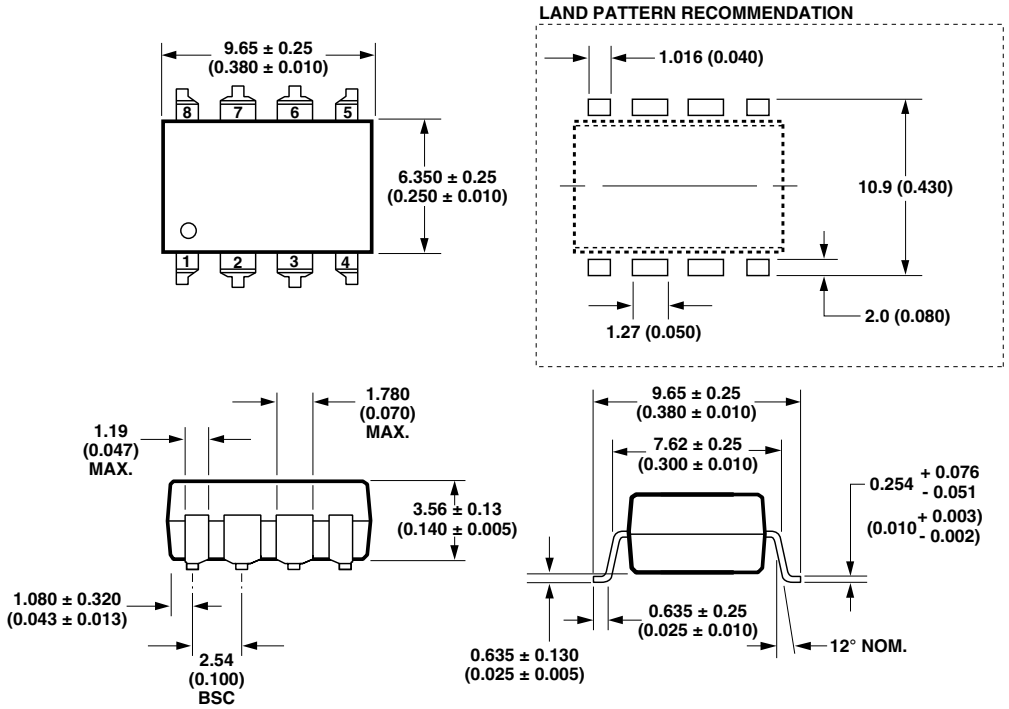


DIMENSIONS IN MILLIMETERS (INCHES).
LEAD COPLANARITY = 0.10 mm (0.004 INCHES).

NOTE: FLOATING LEAD PROTRUSION IS 0.25 mm (10 mils) MAX.

### Small-Outline SO-8 Package (HCPL-0600/01/11/30/31/61)

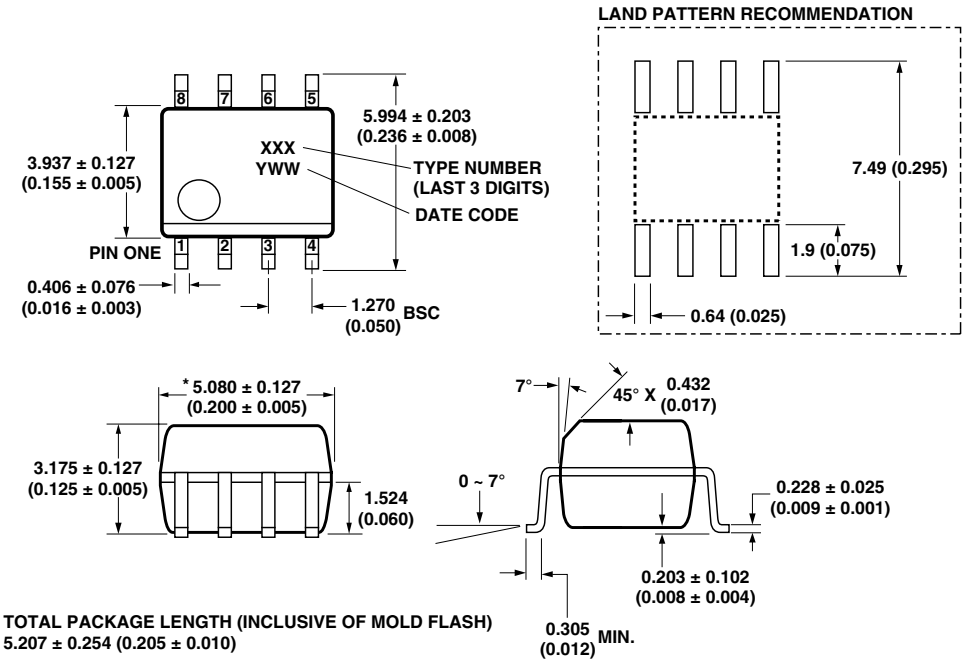


* TOTAL PACKAGE LENGTH (INCLUSIVE OF MOLD FLASH)
5.207 ± 0.254 (0.205 ± 0.010)

DIMENSIONS IN MILLIMETERS (INCHES).
LEAD COPLANARITY = 0.10 mm (0.004 INCHES) MAX.

NOTE: FLOATING LEAD PROTRUSION IS 0.15 mm (6 mils) MAX.

### 8-Pin Widebody DIP Package (HCNW137, HCNW2601/11)

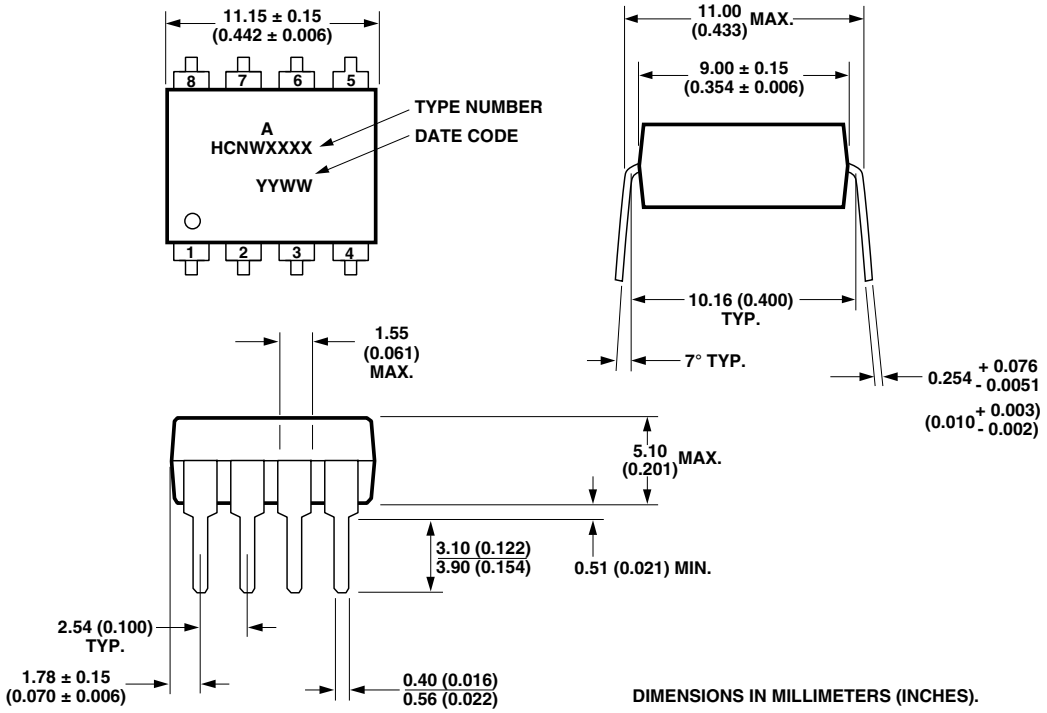


DIMENSIONS IN MILLIMETERS (INCHES).

NOTE: FLOATING LEAD PROTRUSION IS 0.25 mm (10 mils) MAX.

### 8-Pin Widebody DIP Package with Gull Wing Surface Mount Option 300
### (HCNW137, HCNW2601/11)

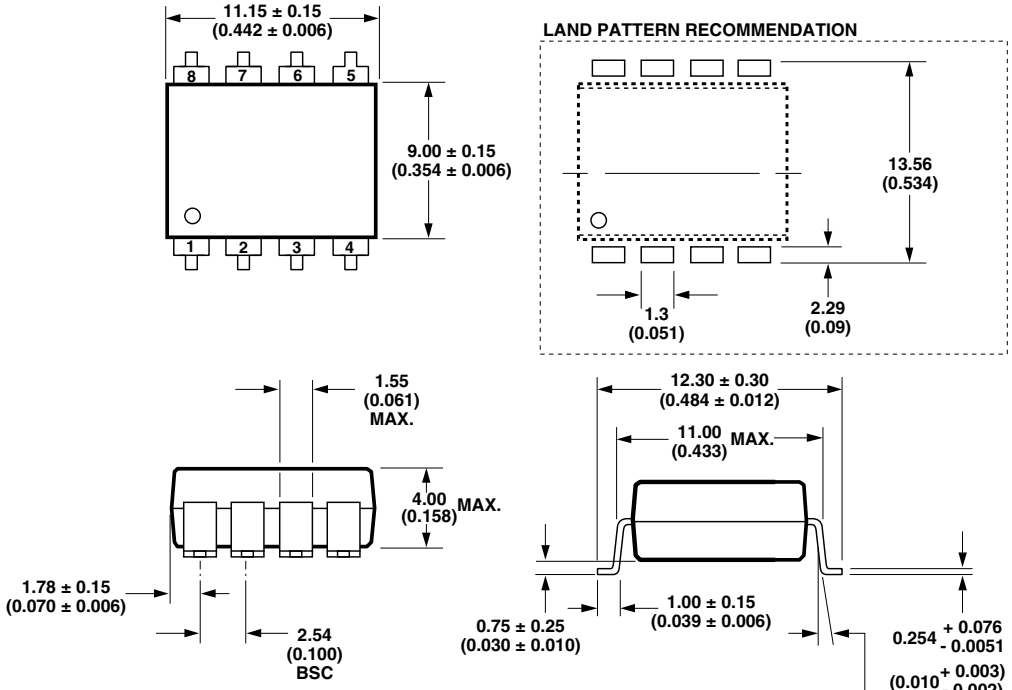


DIMENSIONS IN MILLIMETERS (INCHES).

LEAD COPLANARITY = 0.10 mm (0.004 INCHES).

NOTE: FLOATING LEAD PROTRUSION IS 0.25 mm (10 mils) MAX.

### Solder Reflow Temperature Profile

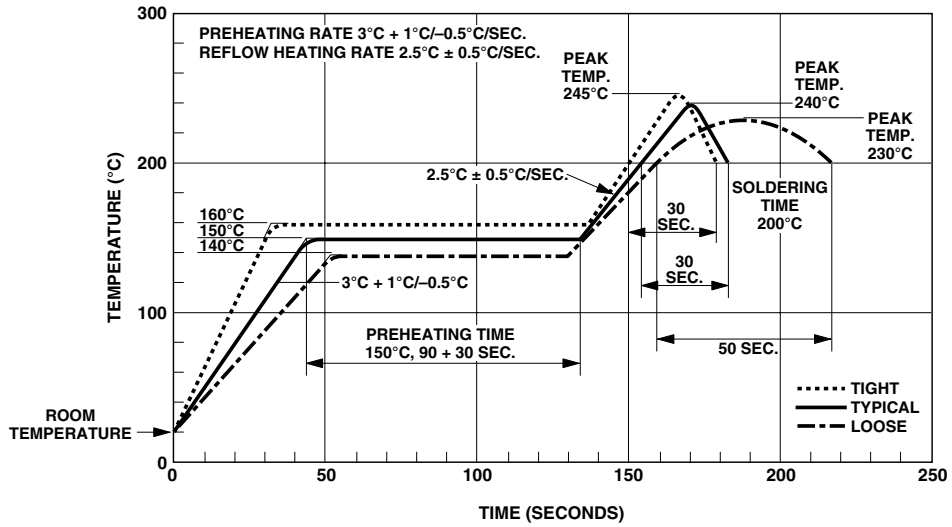


Note: Non-halide flux should be used.

**Recommended Pb-free IR Profile**

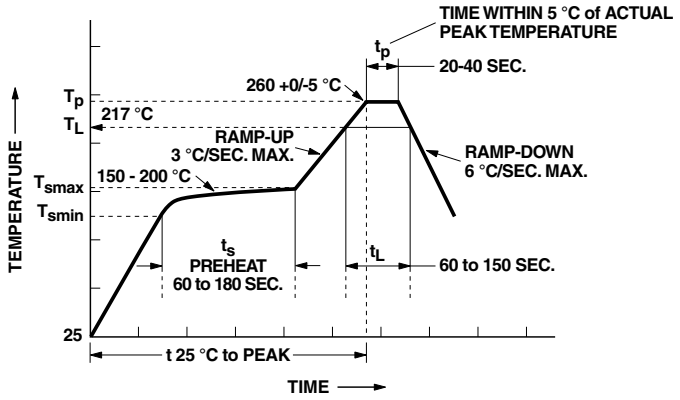


NOTES:
THE TIME FROM 25 °C to PEAK TEMPERATURE = 8 MINUTES MAX.
$T_{smax}$ = 200 °C, $T_{smin}$ = 150 °C

**Note: Non-halide flux should be used.**

**Regulatory Information**

The 6N137, HCPL-26XX/06XX/46XX, and HCNW137/26XX have been approved by the following organizations:

**UL**

Recognized under UL 1577, Component Recognition Program, File E55361.

**CSA**

Approved under CSA Component Acceptance Notice #5, File CA 88324.

**IEC/EN/DIN EN 60747-5-2**

Approved under
IEC 60747-5-2:1997 + A1:2002
EN 60747-5-2:2001 + A1:2002
DIN EN 60747-5-2 (VDE 0884 Teil 2):2003-01
(Option 060 and HCNW only)

**Insulation and Safety Related Specifications**

| Parameter | Symbol | 8-pin DIP (300 Mil) Value | SO-8 Value | Widebody (400 Mil) Value | Units | Conditions |
|---|---|---|---|---|---|---|
| Minimum External Air Gap (External Clearance) | L(101) | 7.1 | 4.9 | 9.6 | mm | Measured from input terminals to output terminals, shortest distance through air. |
| Minimum External Tracking (External Creepage) | L(102) | 7.4 | 4.8 | 10.0 | mm | Measured from input terminals to output terminals, shortest distance path along body. |
| Minimum Internal Plastic Gap (Internal Clearance) | | 0.08 | 0.08 | 1.0 | mm | Through insulation distance, conductor to conductor, usually the direct distance between the photoemitter and photodetector inside the optocoupler cavity. |
| Minimum Internal Tracking (Internal Creepage) | | NA | NA | 4.0 | mm | Measured from input terminals to output terminals, along internal cavity. |
| Tracking Resistance (Comparative Tracking Index) | CTI | 200 | 200 | 200 | Volts | DIN IEC 112/VDE 0303 Part 1 |
| Isolation Group | | IIIa | IIIa | IIIa | | Material Group (DIN VDE 0110, 1/89, Table 1) |

Option 300 - surface mount classification is Class A in accordance with CECC 00802.

**IEC/EN/DIN EN 60747-5-2 Insulation Related Characteristics**
**(HCPL-06xx Option 060 Only)**

| Description | Symbol | Characteristic | Units |
|---|---|---|---|
| Installation classification per DIN VDE 0110/1.89, Table 1 | | | |
| for rated mains voltage ≤ 150 V rms | | I-IV | |
| for rated mains voltage ≤ 300 V rms | | I-III | |
| for rated mains voltage ≤ 600 V rms | | I-III | |
| Climatic Classification | | 55/85/21 | |
| Pollution Degree (DIN VDE 0110/1.89) | | 2 | |
| Maximum Working Insulation Voltage | $V_{IORM}$ | 567 | $V_{peak}$ |
| Input to Output Test Voltage, Method b* $V_{IORM}$ x 1.875 = $V_{PR}$, 100% Production Test with $t_m$ = 1 sec, Partial Discharge < 5 pC | $V_{PR}$ | 1063 | $V_{peak}$ |
| Input to Output Test Voltage, Method a* $V_{IORM}$ x 1.5 = $V_{PR}$, Type and Sample Test, $t_m$ = 60 sec, Partial Discharge < 5 pC | $V_{PR}$ | 851 | $V_{peak}$ |
| Highest Allowable Overvoltage (Transient Overvoltage, $t_{ini}$ = 10 sec) | $V_{IOTM}$ | 6000 | $V_{peak}$ |
| Safety Limiting Values | | | |
| (Maximum values allowed in the event of a failure) | | | |
| Case Temperature | $T_S$ | 150 | °C |
| Input Current** | $I_{S,INPUT}$ | 150 | mA |
| Output Power** | $P_{S,OUTPUT}$ | 600 | mW |
| Insulation Resistance at $T_S$, $V_{IO}$ = 500 V | $R_S$ | $\geq 10^9$ | Ω |

*Refer to the front of the optocoupler section of the current catalog, under Product Safety Regulations section, IEC/EN/DIN EN 60747-5-2, for a detailed description.

Note: Isolation characteristics are guaranteed only within the safety maximum ratings which must be ensured by protective circuits in application.

**IEC/EN/DIN EN 60747-5-2 Insulation Related Characteristics**
**(HCPL-26xx; 46xx; 6N13x Option 060 Only)**

| Description | Symbol | Characteristic | Units |
|---|---|---|---|
| Installation classification per DIN VDE 0110/1.89, Table 1 | | | |
| for rated mains voltage ≤ 300 V rms | | I-IV | |
| for rated mains voltage ≤ 450 V rms | | I-III | |
| Climatic Classification | | 55/85/21 | |
| Pollution Degree (DIN VDE 0110/1.89) | | 2 | |
| Maximum Working Insulation Voltage | $V_{IORM}$ | 630 | $V_{peak}$ |
| Input to Output Test Voltage, Method b* $V_{IORM}$ x 1.875 = $V_{PR}$, 100% Production Test with $t_m$ = 1 sec, Partial Discharge < 5 pC | $V_{PR}$ | 1181 | $V_{peak}$ |
| Input to Output Test Voltage, Method a* $V_{IORM}$ x 1.5 = $V_{PR}$, Type and sample test, $t_m$ = 60 sec, Partial Discharge < 5 pC | $V_{PR}$ | 945 | $V_{peak}$ |
| Highest Allowable Overvoltage* (Transient Overvoltage, $t_{ini}$ = 10 sec) | $V_{IOTM}$ | 6000 | $V_{peak}$ |
| Safety Limiting Values (Maximum values allowed in the event of a failure, also see Figure 16, Thermal Derating curve.) | | | |
| Case Temperature | $T_S$ | 175 | °C |
| Input Current | $I_{S,INPUT}$ | 230 | mA |
| Output Power | $P_{S,OUTPUT}$ | 600 | mW |
| Insulation Resistance at $T_S$, $V_{IO}$ = 500 V | $R_S$ | $\geq 10^9$ | Ω |

*Refer to the front of the optocoupler section of the current catalog, under Product Safety Regulations section, IEC/EN/DIN EN 60747-5-2, for a detailed description.
Note: Isolation characteristics are guaranteed only within the safety maximum ratings which must be ensured by protective circuits in application.

**IEC/EN/DIN EN 60747-5-2 Insulation Related Characteristics (HCNW137/2601/2611 Only)**

| Description | Symbol | Characteristic | Units |
|---|---|---|---|
| Installation classification per DIN VDE 0110/1.89, Table 1 | | | |
| for rated mains voltage ≤600 V rms | | I-IV | |
| for rated mains voltage ≤1000 V rms | | I-III | |
| Climatic Classification (DIN IEC 68 part 1) | | 55/100/21 | |
| Pollution Degree (DIN VDE 0110/1.89) | | 2 | |
| Maximum Working Insulation Voltage | $V_{IORM}$ | 1414 | $V_{peak}$ |
| Input to Output Test Voltage, Method b* $V_{IORM}$ x 1.875 = $V_{PR}$, 100% Production Test with $t_m$ = 1 sec, Partial Discharge < 5 pC | $V_{PR}$ | 2651 | $V_{peak}$ |
| Input to Output Test Voltage, Method a* $V_{IORM}$ x 1.5 = $V_{PR}$, Type and sample test, $t_m$ = 60 sec, Partial Discharge < 5 pC | $V_{PR}$ | 2121 | $V_{peak}$ |
| Highest Allowable Overvoltage* (Transient Overvoltage, $t_{ini}$ = 10 sec) | $V_{IOTM}$ | 8000 | $V_{peak}$ |
| Safety Limiting Values (Maximum values allowed in the event of a failure, also see Figure 16, Thermal Derating curve.) | | | |
| Case Temperature | $T_S$ | 150 | °C |
| Input Current | $I_{S,INPUT}$ | 400 | mA |
| Output Power | $P_{S,OUTPUT}$ | 700 | mW |
| Insulation Resistance at $T_S$, $V_{IO}$ = 500 V | $R_S$ | $\geq 10^9$ | Ω |

*Refer to the front of the optocoupler section of the current catalog, under Product Safety Regulations section, IEC/EN/DIN EN 60747-5-2, for a detailed description.
Note: Isolation characteristics are guaranteed only within the safety maximum ratings which must be ensured by protective circuits in application.

**Absolute Maximum Ratings* (No Derating Required up to 85°C)**

| Parameter | Symbol | Package** | Min. | Max. | Units | Note |
|---|---|---|---|---|---|---|
| Storage Temperature | $T_S$ | | -55 | 125 | °C | |
| Operating Temperature† | $T_A$ | | -40 | 85 | °C | |
| Average Forward Input Current | $I_F$ | Single 8-Pin DIP<br>Single SO-8<br>Widebody | | 20 | mA | 2 |
| | | Dual 8-Pin DIP<br>Dual SO-8 | | 15 | | 1, 3 |
| Reverse Input Voltage | $V_R$ | 8-Pin DIP, SO-8 | | 5 | V | 1 |
| | | Widebody | | 3 | | |
| Input Power Dissipation | $P_I$ | Widebody | | 40 | mW | |
| Supply Voltage<br>(1 Minute Maximum) | $V_{CC}$ | | | 7 | V | |
| Enable Input Voltage (Not to Exceed $V_{CC}$ by more than 500 mV) | $V_E$ | Single 8-Pin DIP<br>Single SO-8<br>Widebody | | $V_{CC}$ + 0.5 | V | |
| Enable Input Current | $I_E$ | | | 5 | mA | |
| Output Collector Current | $I_O$ | | | 50 | mA | 1 |
| Output Collector Voltage | $V_O$ | | | 7 | V | 1 |
| Output Collector Power Dissipation | $P_O$ | Single 8-Pin DIP<br>Single SO-8<br>Widebody | | 85 | mW | |
| | | Dual 8-Pin DIP<br>Dual SO-8 | | 60 | | 1, 4 |
| Lead Solder Temperature<br>(Through Hole Parts Only) | $T_{LS}$ | 8-Pin DIP | 260°C for 10 sec.,<br>1.6 mm below seating plane | | | |
| | | Widebody | 260°C for 10 sec.,<br>up to seating plane | | | |
| Solder Reflow Temperature Profile (Surface Mount Parts Only) | | SO-8 and Option 300 | See Package Outline Drawings section | | | |

*JEDEC Registered Data (for 6N137 only).
**Ratings apply to all devices except otherwise noted in the Package column.
†0°C to 70°C on JEDEC Registration.

**Recommended Operating Conditions**

| Parameter | Symbol | Min. | Max. | Units |
|---|---|---|---|---|
| Input Current, Low Level | $I_{FL}$* | 0 | 250 | µA |
| Input Current, High Level[1] | $I_{FH}$** | 5 | 15 | mA |
| Power Supply Voltage | $V_{CC}$ | 4.5 | 5.5 | V |
| Low Level Enable Voltage† | $V_{EL}$ | 0 | 0.8 | V |
| High Level Enable Voltage† | $V_{EH}$ | 2.0 | $V_{CC}$ | V |
| Operating Temperature | $T_A$ | -40 | 85 | °C |
| Fan Out (at $R_L$ = 1 kΩ)[1] | N | | 5 | TTL Loads |
| Output Pull-up Resistor | $R_L$ | 330 | 4 k | Ω |

*The off condition can also be guaranteed by ensuring that $V_{FL}$ ≤0.8 volts.
**The initial switching threshold is 5 mA or less. It is recommended that 6.3 mA to 10 mA be used for best performance and to permit at least a 20% LED degradation guardband.
†For single channel products only.

**Electrical Specifications**

Over recommended temperature ($T_A$ = -40°C to +85°C) unless otherwise specified. All Typicals at $V_{CC}$ = 5 V, $T_A$ = 25°C. All enable test conditions apply to single channel products only. See note 5.

| Parameter | Sym. | Package | Min. | Typ. | Max. | Units | Test Conditions | Fig. | Note |
|---|---|---|---|---|---|---|---|---|---|
| High Level Output Current | $I_{OH}$* | All | | 5.5 | 100 | µA | $V_{CC}$ = 5.5 V, $V_E$ = 2.0 V, $V_O$ = 5.5 V, $I_F$ = 250 mA | 1 | 1, 6, 19 |
| Input Threshold Current | $I_{TH}$ | Single Channel<br>Widebody | | 2.0 | 5.0 | mA | $V_{CC}$ = 5.5 V, $V_E$ = 2.0 V, $V_O$ = 0.6 V, $I_{OL}$ (Sinking) = 13 mA | 2, 3 | 19 |
| | | Dual Channel | | 2.5 | | | | | |
| Low Level Output Voltage | $V_{OL}$* | 8-Pin DIP<br>SO-8 | | 0.35 | 0.6 | V | $V_{CC}$ = 5.5 V, $V_E$ = 2.0 V, $I_F$ = 5 mA, $I_{OL}$ (Sinking) = 13 mA | 2, 3, 4, 5 | 1, 19 |
| | | Widebody | | 0.4 | | | | | |
| High Level Supply Current | $I_{CCH}$ | Single Channel | | 7.0 | 10.0* | mA | $V_E$ = 0.5 V $V_{CC}$ = 5.5 V | | 7 |
| | | | | 6.5 | | | $V_E$ = $V_{CC}$ $I_F$ = 0 mA | | |
| | | Dual Channel | | 10 | 15 | | Both Channels | | |
| Low Level Supply Current | $I_{CCL}$ | Single Channel | | 9.0 | 13.0* | mA | $V_E$ = 0.5 V $V_{CC}$ = 5.5 V | | 8 |
| | | | | 8.5 | | | $V_E$ = $V_{CC}$ $I_F$ = 10 mA | | |
| | | Dual Channel | | 13 | 21 | | Both Channels | | |
| High Level Enable Current | $I_{EH}$ | Single Channel | | -0.7 | -1.6 | mA | $V_{CC}$ = 5.5 V, $V_E$ = 2.0 V | | |
| Low Level Enable Current | $I_{EL}$* | | | -0.9 | -1.6 | mA | $V_{CC}$ = 5.5 V, $V_E$ = 0.5 V | | 9 |
| High Level Enable Voltage | $V_{EH}$ | | 2.0 | | | V | | | 19 |
| Low Level Enable Voltage | $V_{EL}$ | | | | 0.8 | V | | | |
| Input Forward Voltage | $V_F$ | 8-Pin DIP | 1.4 | 1.5 | 1.75* | V | $T_A$ = 25°C $I_F$ = 10 mA | 6, 7 | 1 |
| | | SO-8 | 1.3 | | 1.80 | | | | |
| | | Widebody | 1.25 | 1.64 | 1.85 | | $T_A$ = 25°C | | |
| | | | 1.2 | | 2.05 | | | | |
| Input Reverse Breakdown Voltage | $BV_R$* | 8-Pin DIP<br>SO-8 | 5 | | | V | $I_R$ = 10 µA | | 1 |
| | | Widebody | 3 | | | | $I_R$ = 100 µA, $T_A$ = 25°C | | |
| Input Diode Temperature Coefficient | $DV_F/\Delta T_A$ | 8-Pin DIP<br>SO-8 | | -1.6 | | mV/°C | $I_F$ = 10 mA | 7 | 1 |
| | | Widebody | | -1.9 | | | | | |
| Input Capacitance | $C_{IN}$ | 8-Pin DIP<br>SO-8 | | 60 | | pF | f = 1 MHz, $V_F$ = 0 V | | 1 |
| | | Widebody | | 70 | | | | | |

*JEDEC registered data for the 6N137. The JEDEC Registration specifies 0°C to +70°C. HP specifies -40°C to +85°C.

**Switching Specifications (AC)**

Over Recommended Temperature ($T_A$ = -40°C to +85°C), $V_{CC}$ = 5 V, $I_F$ = 7.5 mA unless otherwise specified.
All Typicals at $T_A$ = 25°C, $V_{CC}$ = 5 V.

| Parameter | Sym. | Package** | Min. | Typ. | Max. | Units | Test Conditions | Fig. | Note |
|---|---|---|---|---|---|---|---|---|---|
| Propagation Delay Time to High Output Level | $t_{PLH}$ | | 20 | 48 | 75*<br>100 | ns | $T_A$ = 25°C $R_L$ = 350 Ω<br>$C_L$ = 15 pF | 8, 9, 10 | 1, 10, 19 |
| Propagation Delay Time to Low Output Level | $t_{PHL}$ | | 25 | 50 | 75*<br>100 | ns | $T_A$ = 25°C | | 1, 11, 19 |
| Pulse Width Distortion | $\|t_{PHL} - t_{PLH}\|$ | 8-Pin DIP<br>SO-8<br>Widebody | | 3.5 | 35<br><br>40 | ns | | 8, 9, 10, 11 | 13, 19 |
| Propagation Delay Skew | $t_{PSK}$ | | | | 40 | ns | | | 12, 13, 19 |
| Output Rise Time (10-90%) | $t_r$ | | | 24 | | ns | | 12 | 1, 19 |
| Output Fall Time (90-10%) | $t_f$ | | | 10 | | ns | | 12 | 1, 19 |
| Propagation Delay Time of Enable from $V_{EH}$ to $V_{EL}$ | $t_{ELH}$ | Single Channel | | 30 | | ns | $R_L$ = 350 Ω,<br>$C_L$ = 15 pF,<br>$V_{EL}$ = 0 V, $V_{EH}$ = 3 V | 13, 14 | 14 |
| Propagation Delay Time of Enable from $V_{EL}$ to $V_{EH}$ | $t_{EHL}$ | Single Channel | | 20 | | ns | | | 15 |

*JEDEC registered data for the 6N137.
**Ratings apply to all devices except otherwise noted in the Package column.

| Parameter | Sym. | Device | Min. | Typ. | Units | Test Conditions | | Fig. | Note |
|---|---|---|---|---|---|---|---|---|---|
| Logic High Common Mode Transient Immunity | $\|CM_H\|$ | 6N137 | 1,000 | 10,000 | V/µs | $\|V_{CM}\|$ = 10 V | $V_{CC}$ = 5 V, $I_F$ = 0 mA, | 15 | 1, 16, |
| | | HCPL-2630<br>HCPL-0600/0630<br>HCNW137 | 5,000 | 10,000 | | $\|V_{CM}\|$ = 1 kV | $V_{O(MIN)}$ = 2 V,<br>$R_L$ = 350 Ω, $T_A$ = 25°C | | 18, 19 |
| | | HCPL-2601/2631<br>HCPL-0601/0631<br>HCNW2601 | 10,000 | 15,000 | | $\|V_{CM}\|$ = 1 kV | | | |
| | | HCPL-2611/4661<br>HCPL-0611/0661<br>HCNW2611 | 15,000 | 25,000 | | $\|V_{CM}\|$ = 1 kV | | | |
| Logic Low Common Mode Transient Immunity | $\|CM_L\|$ | 6N137 | 1,000 | 10,000 | V/µs | $\|V_{CM}\|$ = 10 V | $V_{CC}$ = 5 V, $I_F$ = 7.5 mA, | 15 | 1, 17, |
| | | HCPL-2630<br>HCPL-0600/0630<br>HCNW137 | 5,000 | 10,000 | | $\|V_{CM}\|$ = 1 kV | $V_{O(MAX)}$ = 0.8 V,<br>$R_L$ = 350 Ω, $T_A$ = 25°C | | 18, 19 |
| | | HCPL-2601/2631<br>HCPL-0601/0631<br>HCNW2601 | 10,000 | 15,000 | | $\|V_{CM}\|$ = 1 kV | | | |
| | | HCPL-2611/4661<br>HCPL-0611/0661<br>HCNW2611 | 15,000 | 25,000 | | $\|V_{CM}\|$ = 1 kV | | | |

## Package Characteristics

All Typicals at $T_A$ = 25°C.

| Parameter | Sym. | Package | Min. | Typ. | Max. | Units | Test Conditions | Fig. | Note |
|---|---|---|---|---|---|---|---|---|---|
| Input-Output Insulation | $I_{I-O}$* | Single 8-Pin DIP<br>Single SO-8 | | | 1 | µA | 45% RH, t = 5 s,<br>$V_{I-O}$ = 3 kV dc, $T_A$ = 25°C | | 20, 21 |
| Input-Output Momentary Withstand Voltage** | $V_{ISO}$ | 8-Pin DIP, SO-8 | 3750 | | | V rms | RH ≤ 50%, t = 1 min,<br>$T_A$ = 25°C | | 20, 21 |
| | | Widebody | 5000 | | | | | | 20, 22 |
| | | OPT 020† | 5000 | | | | | | |
| Input-Output Resistance | $R_{I-O}$ | 8-Pin DIP, SO-8 | | $10^{12}$ | | Ω | $V_{I-O}$ = 500 V dc | | 1, 20, 23 |
| | | Widebody | $10^{12}$ | $10^{13}$ | | | $T_A$ = 25°C | | |
| | | | $10^{11}$ | | | | $T_A$ = 100°C | | |
| Input-Output Capacitance | $C_{I-O}$ | 8-Pin DIP, SO-8 | | 0.6 | | pF | f = 1 MHz, $T_A$ = 25°C | | 1, 20, 23 |
| | | Widebody | | 0.5 | 0.6 | | | | |
| Input-Input Insulation Leakage Current | $I_{I-I}$ | Dual Channel | | 0.005 | | µA | RH ≤ 45%, t = 5 s,<br>$V_{I-I}$ = 500 V | | 24 |
| Resistance (Input-Input) | $R_{I-I}$ | Dual Channel | | $10^{11}$ | | Ω | | | 24 |
| Capacitance (Input-Input) | $C_{I-I}$ | Dual 8-Pin DIP | | 0.03 | | pF | f = 1 MHz | | 24 |
| | | Dual SO-8 | | 0.25 | | | | | |

*JEDEC registered data for the 6N137. The JEDEC Registration specifies 0°C to 70°C. Avago specifies -40°C to 85°C.
**The Input-Output Momentary Withstand Voltage is a dielectric voltage rating that should not be interpreted as an input-output continuous voltage rating. For the continuous voltage rating refer to the IEC/EN/DIN EN 60747-5-2 Insulation Characteristics Table (if applicable), your equipment level safety specification or Avago Application Note 1074 entitled "Optocoupler Input-Output Endurance Voltage."
†For 6N137, HCPL-2601/2611/2630/2631/4661 only.

**Notes:**

1. Each channel.
2. Peaking circuits may produce transient input currents up to 50 mA, 50 ns maximum pulse width, provided average current does not exceed 20 mA.
3. Peaking circuits may produce transient input currents up to 50 mA, 50 ns maximum pulse width, provided average current does not exceed 15 mA.
4. Derate linearly above 80°C free-air temperature at a rate of 2.7 mW/°C for the SOIC-8 package.
5. Bypassing of the power supply line is required, with a 0.1 µF ceramic disc capacitor adjacent to each optocoupler as illustrated in Figure 17. Total lead length between both ends of the capacitor and the isolator pins should not exceed 20 mm.
6. The JEDEC registration for the 6N137 specifies a maximum $I_{OH}$ of 250 µA. Avago guarantees a maximum $I_{OH}$ of 100 µA.
7. The JEDEC registration for the 6N137 specifies a maximum $I_{CCH}$ of 15 mA. Avago guarantees a maximum $I_{CCH}$ of 10 mA.
8. The JEDEC registration for the 6N137 specifies a maximum $I_{CCL}$ of 18 mA. Avago guarantees a maximum $I_{CCL}$ of 13 mA.
9. The JEDEC registration for the 6N137 specifies a maximum $I_{EL}$ of –2.0 mA. Avago guarantees a maximum $I_{EL}$ of -1.6 mA.
10. The $t_{PLH}$ propagation delay is measured from the 3.75 mA point on the falling edge of the input pulse to the 1.5 V point on the rising edge of the output pulse.
11. The $t_{PHL}$ propagation delay is measured from the 3.75 mA point on the rising edge of the input pulse to the 1.5 V point on the falling edge of the output pulse.
12. $t_{PSK}$ is equal to the worst case difference in $t_{PHL}$ and/or $t_{PLH}$ that will be seen between units at any given temperature and specified test conditions.
13. See application section titled "Propagation Delay, Pulse-Width Distortion and Propagation Delay Skew" for more information.
14. The $t_{ELH}$ enable propagation delay is measured from the 1.5 V point on the falling edge of the enable input pulse to the 1.5 V point on the rising edge of the output pulse.
15. The $t_{EHL}$ enable propagation delay is measured from the 1.5 V point on the rising edge of the enable input pulse to the 1.5 V point on the falling edge of the output pulse.
16. $CM_H$ is the maximum tolerable rate of rise of the common mode voltage to assure that the output will remain in a high logic state (i.e., $V_O$ > 2.0 V).
17. $CM_L$ is the maximum tolerable rate of fall of the common mode voltage to assure that the output will remain in a low logic state (i.e., $V_O$ < 0.8 V).
18. For sinusoidal voltages, $(|dV_{CM}| / dt)_{max} = \pi f_{CM} V_{CM}(p\text{-}p)$.
19. No external pull up is required for a high logic state on the enable input. If the $V_E$ pin is not used, tying $V_E$ to $V_{CC}$ will result in improved CMR performance. For single channel products only.
20. Device considered a two-terminal device: pins 1, 2, 3, and 4 shorted together, and pins 5, 6, 7, and 8 shorted together.
21. In accordance with UL1577, each optocoupler is proof tested by applying an insulation test voltage ≥ 4500 V rms for one second (leakage detection current limit, $I_{I-O}$ ≤ 5 µA). This test is performed before the 100% production test for partial discharge (Method b) shown in the IEC/EN/DIN EN 60747-5-2 Insulation Characteristics Table, if applicable.
22. In accordance with UL 1577, each optocoupler is proof tested by applying an insulation test voltage ≥ 6000 V rms for one second (leakage detection current limit, $I_{I-O}$ ≤ 5 µA). This test is performed before the 100% production test for partial discharge (Method b) shown in the IEC/EN/DIN EN 60747-5-2 Insulation Characteristics Table, if applicable.
23. Measured between the LED anode and cathode shorted together and pins 5 through 8 shorted together. For dual channel products only.
24. Measured between pins 1 and 2 shorted together, and pins 3 and 4 shorted together. For dual channel products only

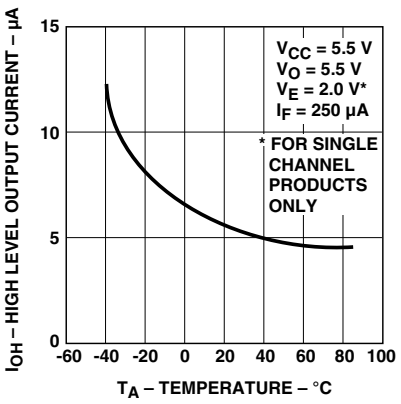


Figure 1. Typical high level output current vs. temperature.

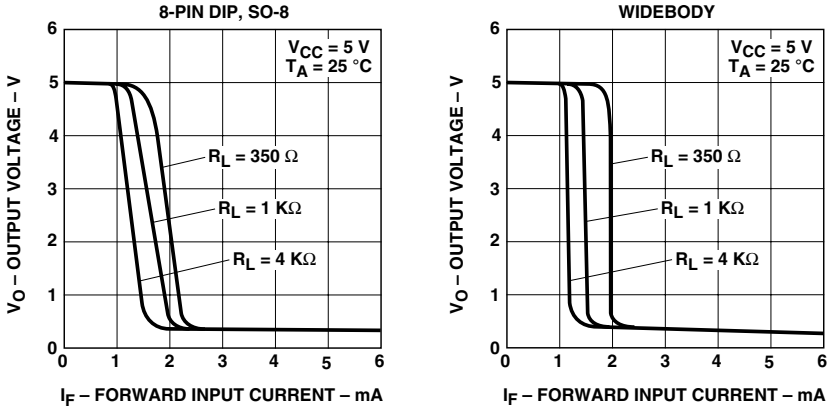


Figure 2. Typical output voltage vs. forward input current.

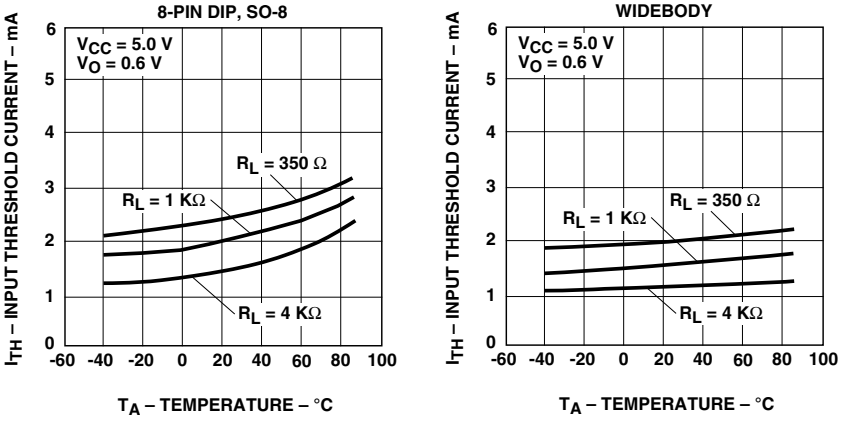


Figure 3. Typical input threshold current vs. temperature.

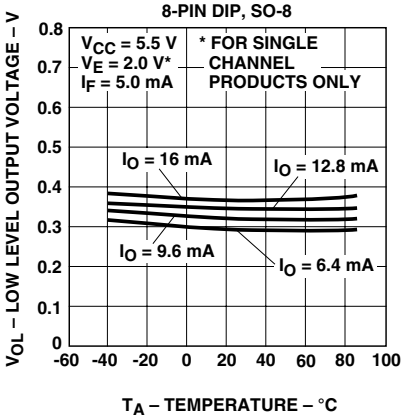


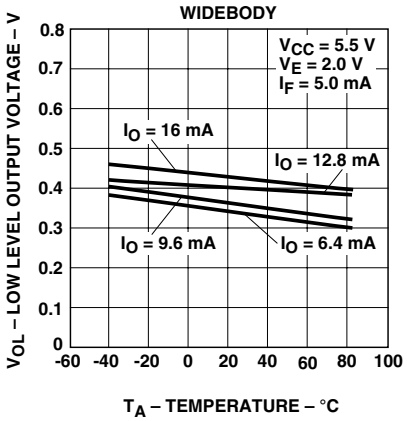


**Figure 4. Typical low level output voltage vs. temperature.**

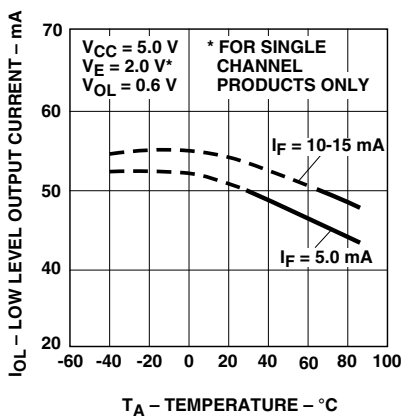


**Figure 5. Typical low level output current vs. temperature.**

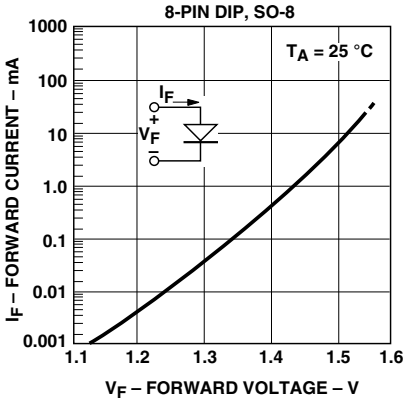


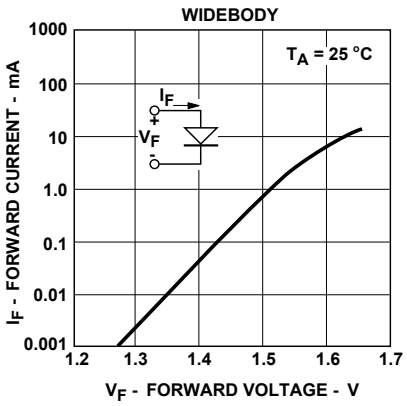


**Figure 6. Typical input diode forward characteristic.**

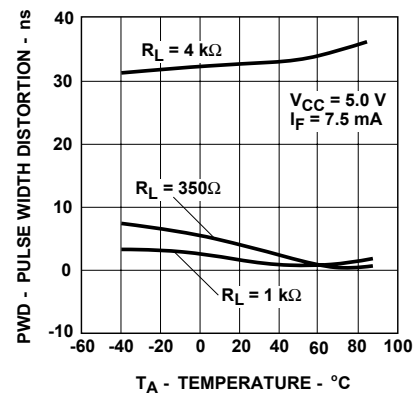


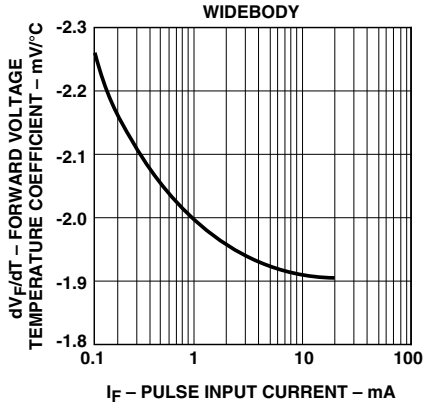


**Figure 7. Typical temperature coefficient of forward voltage vs. input current.**

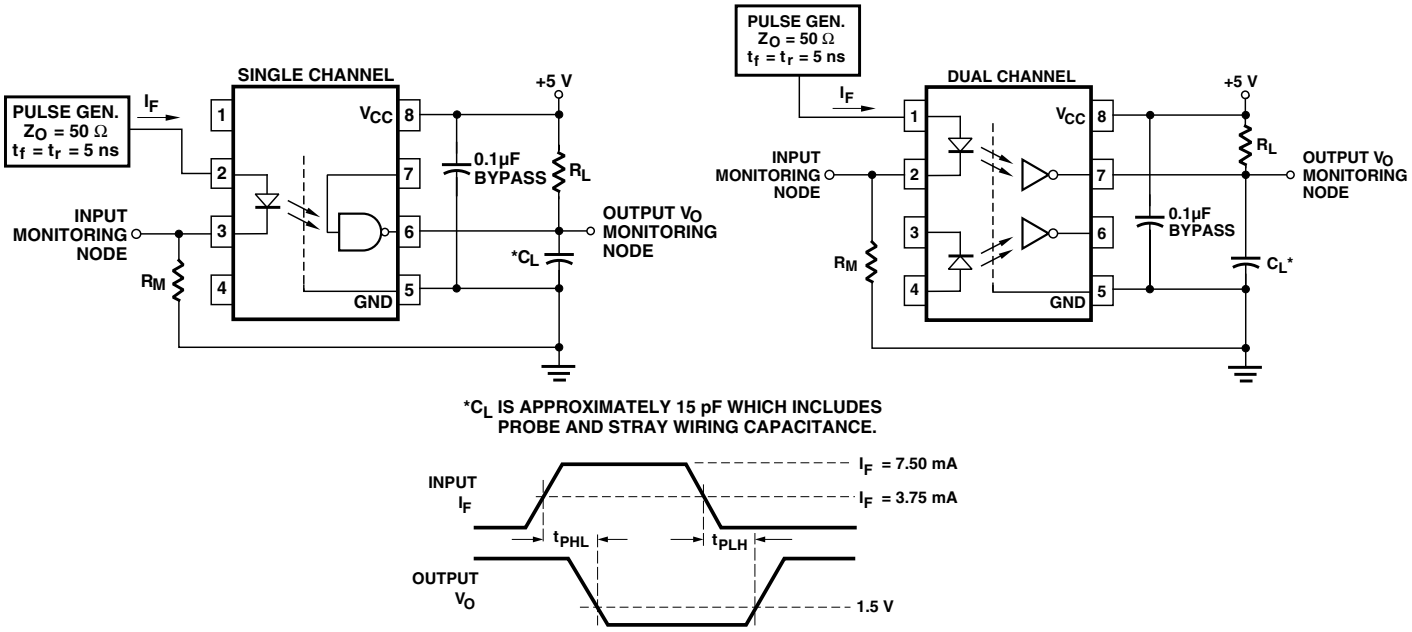


**Figure 8. Test circuit for $t_{PHL}$ and $t_{PLH}$.**

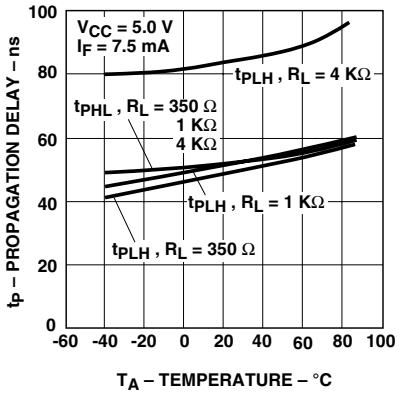


**Figure 9. Typical propagation delay vs. temperature.**

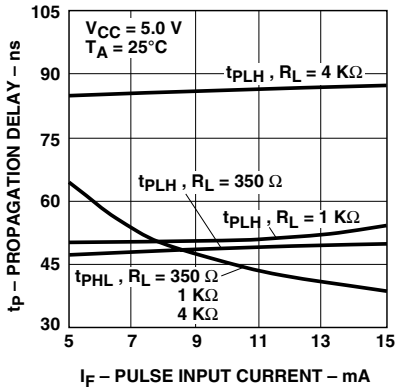


**Figure 10. Typical propagation delay vs. pulse input current.**

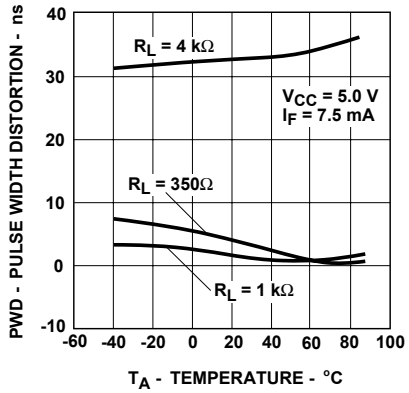


**Figure 11. Typical pulse width distortion vs. temperature.**

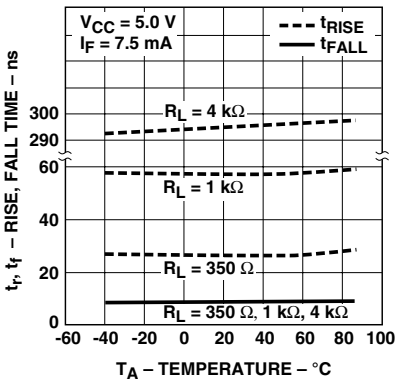


**Figure 12. Typical rise and fall time vs. temperature.**

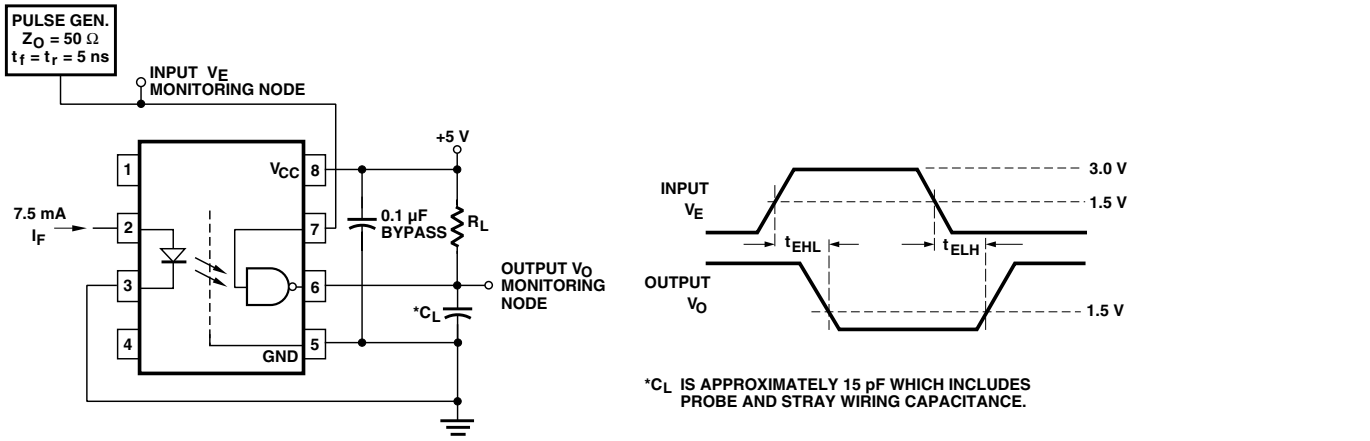


**Figure 13. Test circuit for $t_{EHL}$ and $t_{ELH}$.**

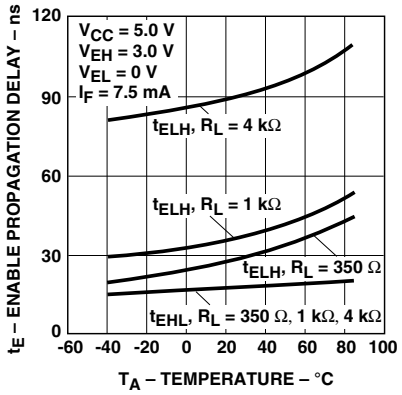


**Figure 14. Typical enable propagation delay vs. temperature.**

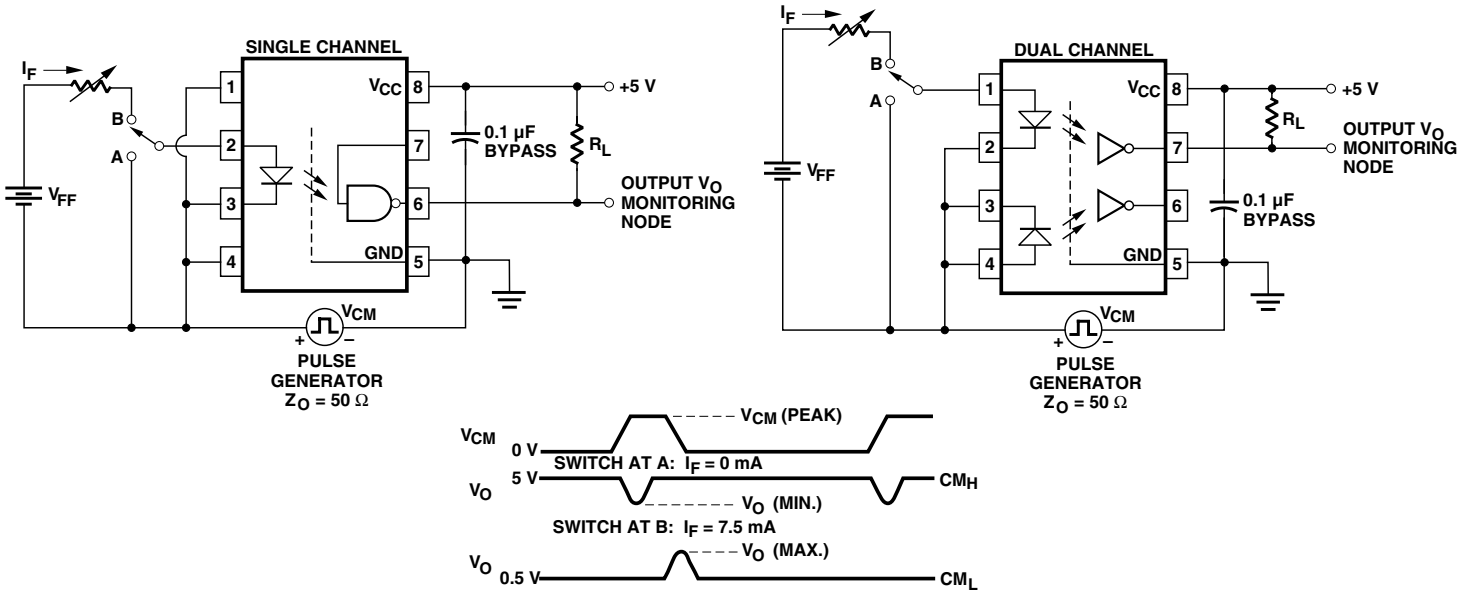


**Figure 15. Test circuit for common mode transient immunity and typical waveforms.**

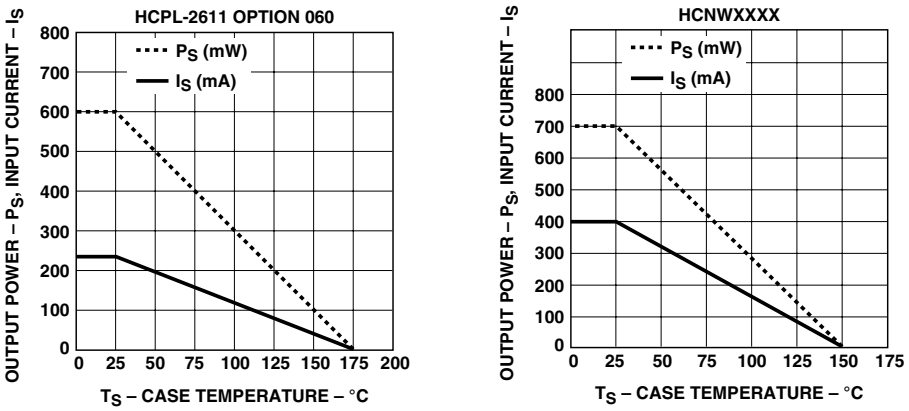


**Figure 16. Thermal derating curve, dependence of safety limiting value with case temperature per IEC/EN/DIN EN 60747-5-2.**

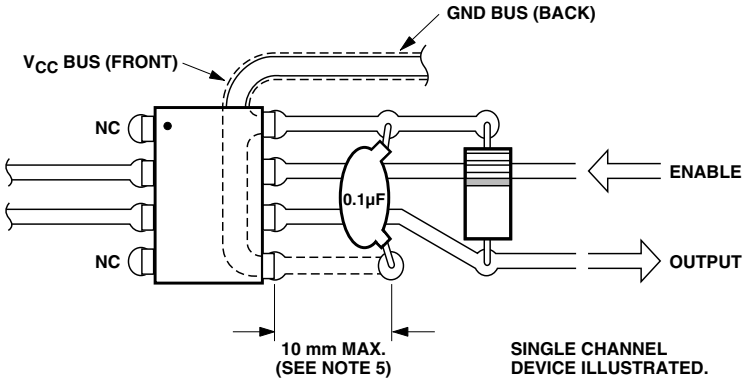


**Figure 17. Recommended printed circuit board layout.**

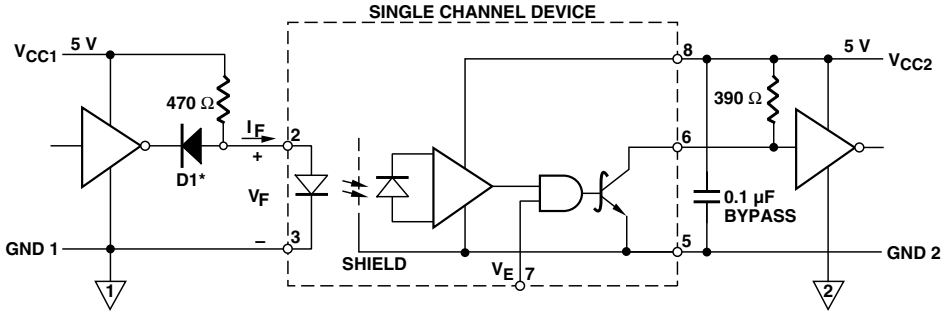


*DIODE D1 (1N916 OR EQUIVALENT) IS NOT REQUIRED FOR UNITS WITH OPEN COLLECTOR OUTPUT.

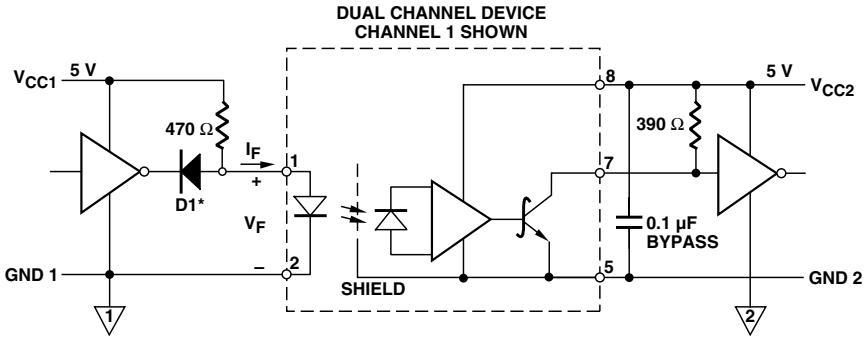


**Figure 18. Recommended TTL/LSTTL to TTL/LSTTL interface circuit.**

## Propagation Delay, Pulse-Width Distortion and Propagation Delay Skew

Propagation delay is a figure of merit which describes how quickly a logic signal propagates through a system. The propagation delay from low to high ($t_{PLH}$) is the amount of time required for an input signal to propagate to the output, causing the output to change from low to high. Similarly, the propagation delay from high to low ($t_{PHL}$) is the amount of time required for the input signal to propagate to the output causing the output to change from high to low (see Figure 8).

Pulse-width distortion (PWD) results when $t_{PLH}$ and $t_{PHL}$ differ in value. PWD is defined as the difference between $t_{PLH}$ and $t_{PHL}$ and often determines the maximum data rate capability of a transmission system. PWD can be expressed in percent by dividing the PWD (in ns) by the minimum pulse width (in ns) being transmitted. Typically, PWD on the order of 20-30% of the minimum pulse width is tolerable; the exact figure depends on the particular application (RS232, RS422, T-l, etc.).

Propagation delay skew, $t_{PSK}$, is an important parameter to consider in parallel data applications where synchronization of signals on parallel data lines is a concern. If the parallel data is being sent through a group of optocouplers, differences in propagation delays will cause the data to arrive at the outputs of the optocouplers at different times. If this difference in propagation delays is large enough, it will determine the maximum rate at which parallel data can be sent through the optocouplers.

Propagation delay skew is defined as the difference between the minimum and maximum propagation delays, either $t_{PLH}$ or $t_{PHL}$, for any given group of optocouplers which are operating under the same conditions (i.e., the same drive current, supply voltage, output load, and operating temperature). As illustrated in Figure 19, if the inputs of a group of optocouplers are switched either ON or OFF at the same time, $t_{PSK}$ is the difference between the shortest propagation delay, either $t_{PLH}$ or $t_{PHL}$, and the longest propagation delay, either $t_{PLH}$ or $t_{PHL}$.

As mentioned earlier, $t_{PSK}$ can determine the maximum parallel data transmission rate. Figure 20 is the timing diagram of a typical parallel data application with both the clock and the data lines being sent through optocouplers. The figure shows data and clock signals at the inputs and outputs of the optocouplers. To obtain the maximum data transmission rate, both edges of the clock signal are being used to clock the data; if only one edge were used, the clock signal would need to be twice as fast.

Propagation delay skew represents the uncertainty of where an edge might be after being sent through an optocoupler. Figure 20 shows that there will be uncertainty in both the data and the clock lines. It is important that these two areas of uncertainty not overlap, otherwise the clock signal might arrive before all of the data outputs have settled, or some of the data outputs may start to change before the clock signal has arrived. From these considerations, the absolute minimum pulse width that can be sent through optocouplers in a parallel application is twice $t_{PSK}$. A cautious design should use a slightly longer pulse width to ensure that any additional uncertainty in the rest of the circuit does not cause a problem.

The $t_{PSK}$ specified optocouplers offer the advantages of guaranteed specifications for propagation delays, pulse-width distortion and propagation delay skew over the recommended temperature, input current, and power supply ranges.

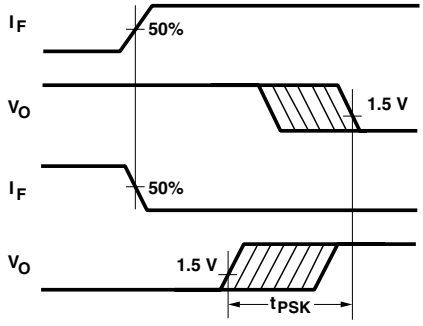


**Figure 19. Illustration of propagation delay skew - $t_{PSK}$.**

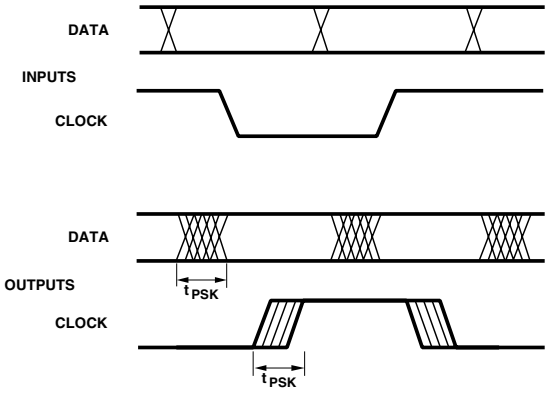


**Figure 20. Parallel data transmission example.**

For product information and a complete list of distributors, please go to our website: **www.avagotech.com**

Avago, Avago Technologies, and the A logo are trademarks of Avago Technologies Limited in the United States and other countries.
Data subject to change. Copyright © 2007 Avago Technologies Limited. All rights reserved. Obsoletes AV02-0170EN
AV02-0940EN - December 24, 2007

ENTEGRECİ

Bu belge www.entegreci.com üzerinden sunulmaktadır.

# Elektronik komponent tedarikinde Entegreci

Entegreci, Eskişehir merkezli, Türkiye geneline satış yapan bir elektronik komponent mağazasıdır. Entegreler (IC), mikrodenetleyiciler, transistörler, diyotlar, pasif elemanlar, konnektörler, modüller ve geliştirme kartları tek adetten seri üretim adetlerine kadar satılır. Ürün sayfalarında güncel stok durumunu, fiyatı ve datasheet bağlantısını bulabilirsiniz.

### Parça koduyla arama

Üretici parça numarasını yazın; stok ve fiyatı hemen görün.

**www.entegreci.com**

### Ürün kategorileri

Entegreden kapasitöre tüm elektronik komponent kategorileri.

**Kategorilere göz atın**

### Üreticiler

Aradığınız üreticinin ürünlerini tek sayfada inceleyin.

**Üreticileri görün**

### Toplu alım ve teklif

Listede olmayan ya da yüksek adetli parçalar için teklif isteyin.

**Teklif isteyin**

**www.entegreci.com** | **destek@entegreci.com** | **0850 305 90 34**

Entegreci is an online electronic components store based in Türkiye. Search by manufacturer part number to see stock, prices and datasheets for integrated circuits, microcontrollers, transistors, passive components and connectors, or request a quote for parts that are not listed.

Bu sayfa Entegreci tarafından eklenmiştir. Belgenin önceki sayfaları asıl yayıncısına aittir ve içeriği değiştirilmemiştir; en güncel sürüm için belgenin yayıncısına başvurun.