FAIRCHILD
SEMICONDUCTOR™

GENERAL PURPOSE 6-PIN PHOTODARLINGTON OPTOCOUPLERS

4N29 4N30 4N31 4N32 4N33

DESCRIPTION

The 4N29, 4N30, 4N31, 4N32, 4N33 have a gallium arsenide infrared emitter optically coupled to a silicon planar photodarlington.

FEATURES

- High sensitivity to low input drive current
- Meets or exceeds all JEDEC Registered Specifications
- VDE 0884 approval available as a test option
  -add option .300. (e.g., 4N29.300)

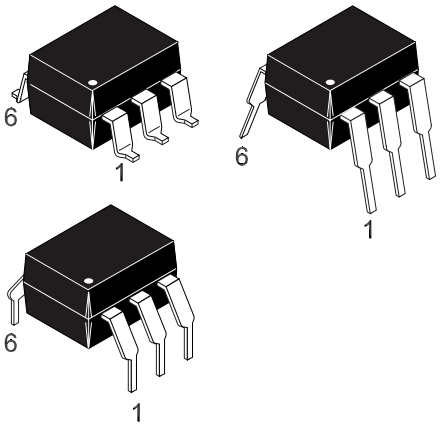

APPLICATIONS

- Low power logic circuits
- Telecommunications equipment
- Portable electronics
- Solid state relays
- Interfacing coupling systems of different potentials and impedances.

SCHEMATIC

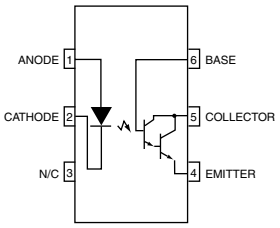

ABSOLUTE MAXIMUM RATINGS (T_A = 25°C Unless otherwise specified.)

Parameter	Symbol	Value	Units
TOTAL DEVICE			
Storage Temperature	T_{STG}	-55 to +150	°C
Operating Temperature	T_{OPR}	-55 to +100	°C
Lead Solder Temperature	T_{SOL}	260 for 10 sec	°C
Total Device Power Dissipation @ T_A = 25°C	P_D	250	mW
Derate above 25°C		3.3	mW/°C
EMITTER			
Continuous Forward Current	I_F	80	mA
Reverse Voltage	V_R	3	V
Forward Current - Peak (300 µs, 2% Duty Cycle)	I_F(pk)	3.0	A
LED Power Dissipation @ T_A = 25°C	P_D	150	mW
Derate above 25°C		2.0	mW/°C
DETECTOR			
Collector-Emitter Breakdown Voltage	BV_{CEO}	30	V
Collector-Base Breakdown Voltage	BV_{CBO}	30	V
Emitter-Collector Breakdown Voltage	BV_{ECO}	5	V
Detector Power Dissipation @ T_A = 25°C	P_D	150	mW
Derate above 25°C		2.0	mW/°C
Continuous Collector Current	I_C	150	mA

FAIRCHILD
SEMICONDUCTOR™

GENERAL PURPOSE 6-PIN PHOTODARLINGTON OPTOCOUPLERS

4N29 4N30 4N31 4N32 4N33

ELECTRICAL CHARACTERISTICS (T_A = 25°C Unless otherwise specified.)

INDIVIDUAL COMPONENT CHARACTERISTICS

Parameter	Test Conditions	Symbol	Min	Typ	Max	Unit
EMITTER						
*Input Forward Voltage	(I_F = 10 mA)	V_F		1.2	1.5	V
*Reverse Leakage Current	(V_R = 3.0 V)	I_R		0.001	100	µA
*Capacitance	(V_F = 0 V, f = 1.0 MHz)	C		150		pF
DETECTOR						
*Collector-Emitter Breakdown Voltage	(I_C = 100 µA, I_B = 0)	BV_{CEO}	30	60		V
*Collector-Base Breakdown Voltage	(I_C = 100 µA, I_E = 0)	BV_{CBO}	30	100		V
*Emitter-Collector Breakdown Voltage	(I_E = 100 µA, I_B = 0)	BV_{ECO}	5.0	8		V
*Collector-Emitter Dark Current	(V_{CE} = 10 V, Base Open)	I_{CEO}		1	100	nA
DC Current Gain	(V_{CE} = 5.0 V, I_C = 500 µA)	h_{FE}		5000		

TRANSFER CHARACTERISTICS

DC Characteristic	Test Conditions	Symbol	Min	Typ	Max	Units
*Collector Output Current[1,2] (4N32, 4N33)	(I_F = 10 mA, V_{CE} = 10 V, I_B = 0)	I_C (CTR)	50 (500)			mA (%)
(4N29, 4N30)			10 (100)			
(4N31)			5 (50)			
*Saturation Voltage[2] (4N29, 4N30, 4N32, 4N33)	(I_F = 8.0 mA, I_C = 2.0 mA)	$V_{CE(sat)}$			1.0	V
(4N31)					1.2	

TRANSFER CHARACTERISTICS

AC Characteristic	Test Conditions	Symbol	Min	Typ	Max	Units
Turn-on Time[3]	(I_F = 200 mA, I_C = 50 mA, V_{CC} = 10 V) (Fig.7)	t_{on}			5.0	µs
Turn-off Time[3] (4N32, 4N33)		t_{off}			100	
(4N29, 4N30, 4N31)					40	
Bandwidth[4,5]		BW		30		KHz

ISOLATION CHARACTERISTICS

Characteristic	Test Conditions	Symbol	Min	Typ	Max	Units
Input-Output Isolation Voltage[6] (4N29, 4N30, 4N31, 4N32, 4N33)	($I_{I-O} \leq$ 1 µA, Vrms, t = 1 min.)	V_{ISO}	5300			Vac(rms)
*(4N32)	VDC		2500			V
*(4N33)	VDC		1500			
Isolation Resistance[6]	(V_{I-O} = 500 VDC)	R_{ISO}		10^{11}		Ω
Isolation Capacitance[6]	(V_{I-O} = ∅, f = 1 MHz)	C_{ISO}		0.8		pf

GENERAL PURPOSE 6-PIN PHOTODARLINGTON OPTOCOUPLERS

4N29 4N30 4N31 4N32 4N33

Fig. 1 Output Current vs. Input Current

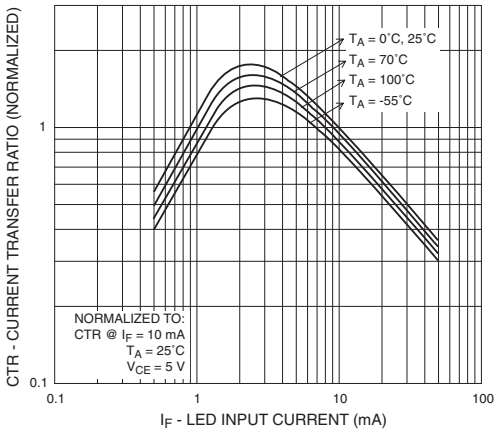

Fig. 2 Current Transfer Ratio vs. Ambient Temperature

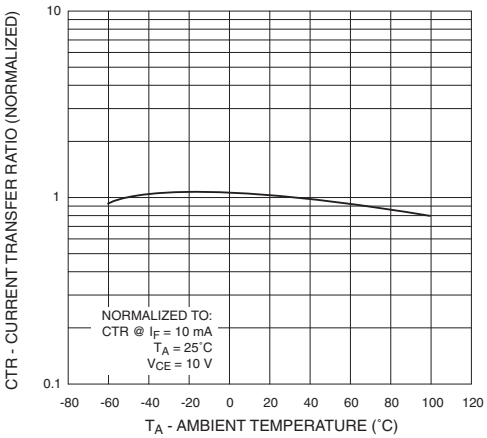

Fig. 3 Collector Current vs. Collector-Emitter Voltage

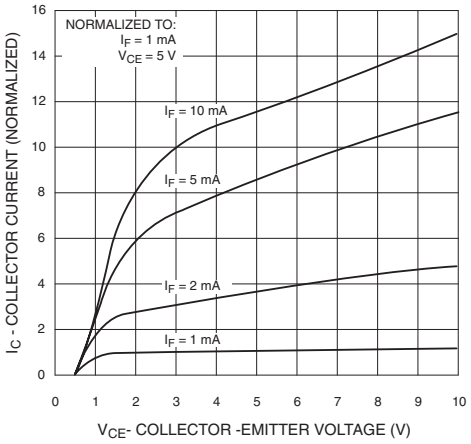

Fig. 4 Dark Current vs. Ambient Temperature

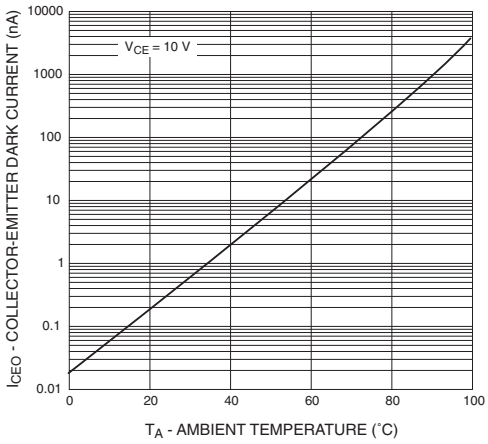

Fig. 5 Turn-On Time vs. Input Current

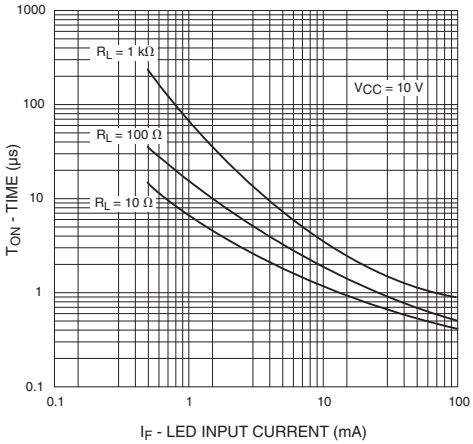

Fig. 6 Turn-Off Time vs. Input Current

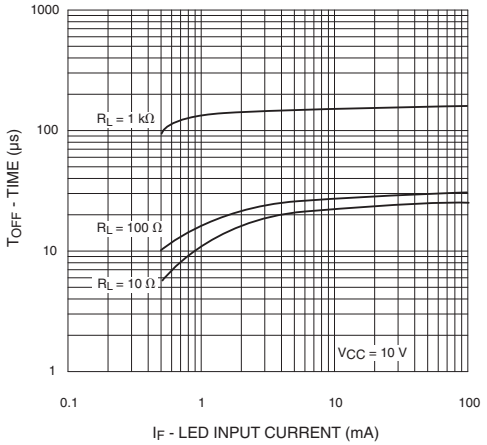

TYPICAL ELECTRO-OPTICAL CHARACTERISTIC CURVES

(25°C Free air temperature unless otherwise specified) (Cont.)

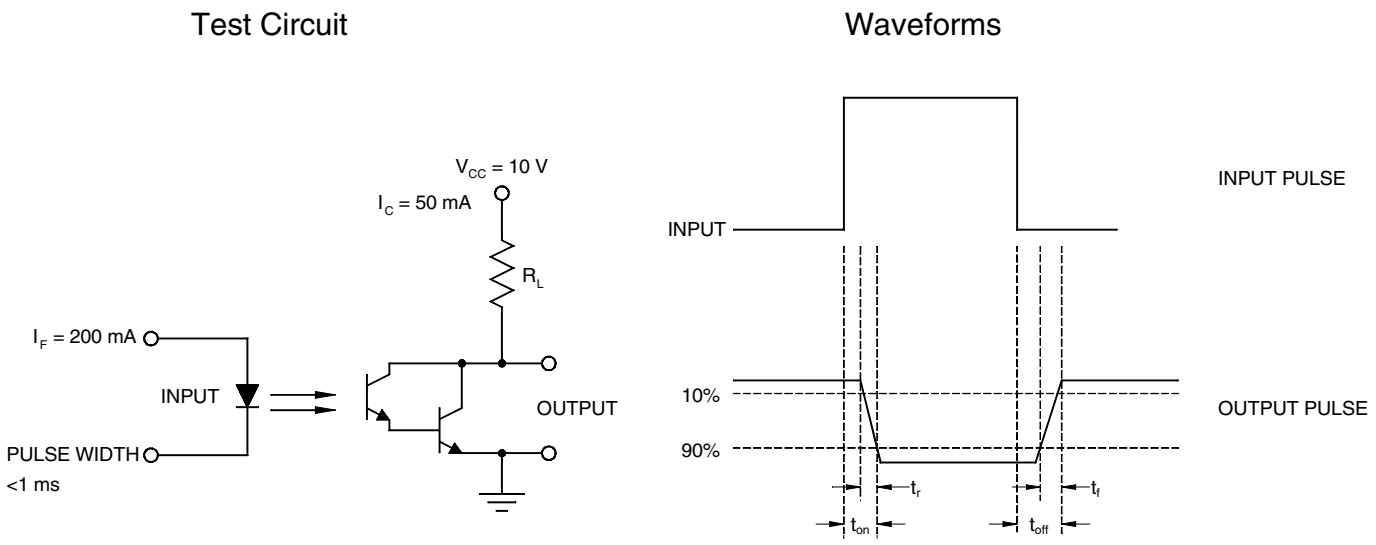

Fig. 7 Switching Time Test Circuit and Waveforms

Notes

* Indicates JEDEC registered data.

1. The current transfer ratio(I_C/I_F) is the ratio of the detector collector current to the LED input current with V_{CE} @ 10 V.
2. Pulse test: pulse width = 300µs, duty cycle ≤ 2.0% .
3. For test circuit setup and waveforms, refer to figure 7..
4. I_F adjusted to I_C = 2.0 mA and I_C = 0.7 mA rms.
5. The frequency at which I_C is 3dB down from the 1 KHz value.
6. For this test, LED pins 1 and 2 are common, and phototransistor pins 4,5 and 6 are common.

FAIRCHILD
SEMICONDUCTOR™

GENERAL PURPOSE 6-PIN PHOTODARLINGTON OPTOCOUPLERS

4N29 4N30 4N31 4N32 4N33

Package Dimensions (Through Hole)

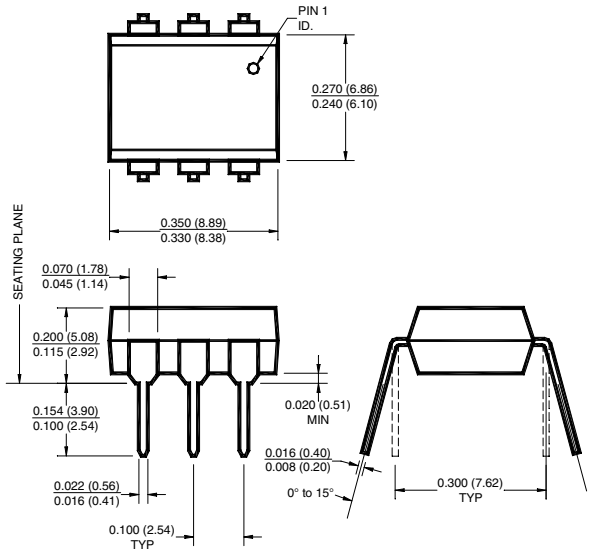

Package Dimensions (Surface Mount)

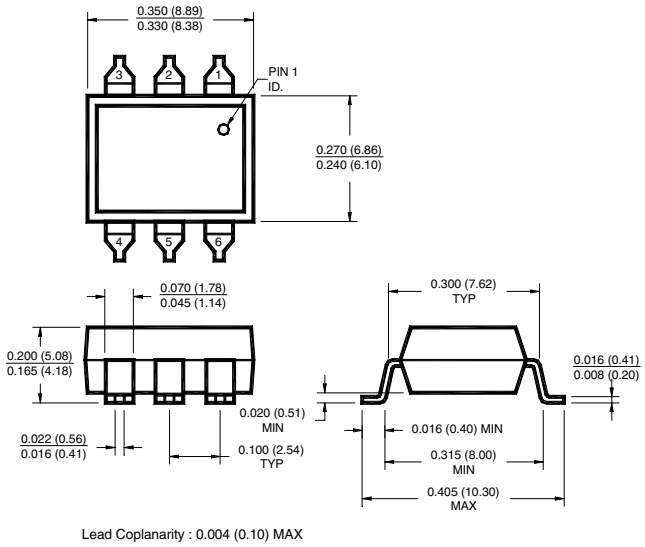

Lead Coplanarity : 0.004 (0.10) MAX

Package Dimensions (0.4”Lead Spacing)

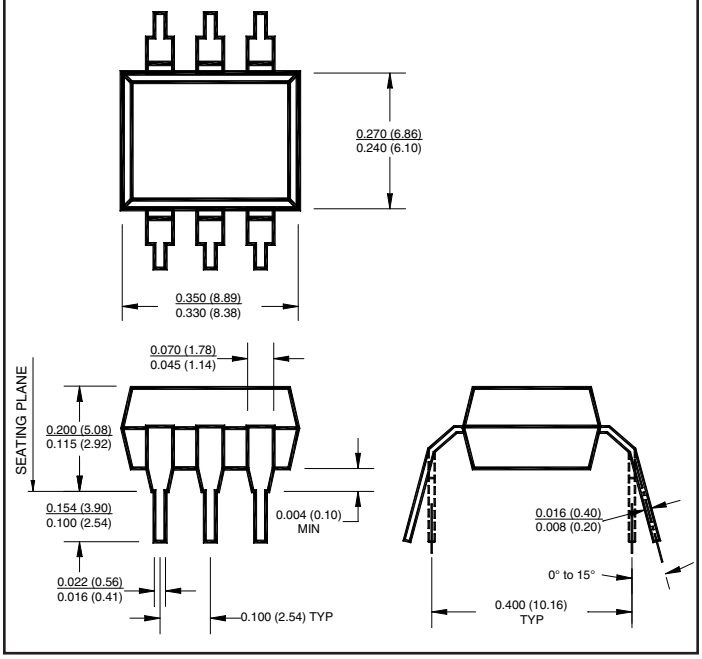

Recommended Pad Layout for Surface Mount Leadform

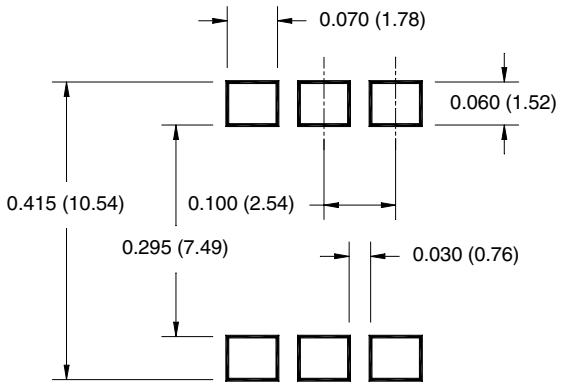

NOTE

All dimensions are in inches (millimeters)

Call QT Optoelectronics for more information or the phone number of your nearest distributor.

United States 800-533-6786 • France 33 [0] 1.45.18.78.78 • Germany 49 [0] 89/96.30.51 • United Kingdom 44 [0] 1296 394499 • Asia/Pacific 603-7248193

www.qtopto.com

FAIRCHILD
SEMICONDUCTOR™

GENERAL PURPOSE 6-PIN PHOTODARLINGTON OPTOCOUPLERS

4N29 4N30 4N31 4N32 4N33

ORDERING INFORMATION

Option	Order Entry Identifier	Description
S	.S	Surface Mount Lead Bend
SD	.SD	Surface Mount; Tape and reel
W	.W	0.4” Lead Spacing
300	.300	VDE 0884
300W	.300W	VDE 0884, 0.4” Lead Spacing
3S	.3S	VDE 0884, Surface Mount
3SD	.3SD	VDE 0884, Surface Mount, Tape & Reel

QT Carrier Tape Specifications (“D” Taping Orientation)

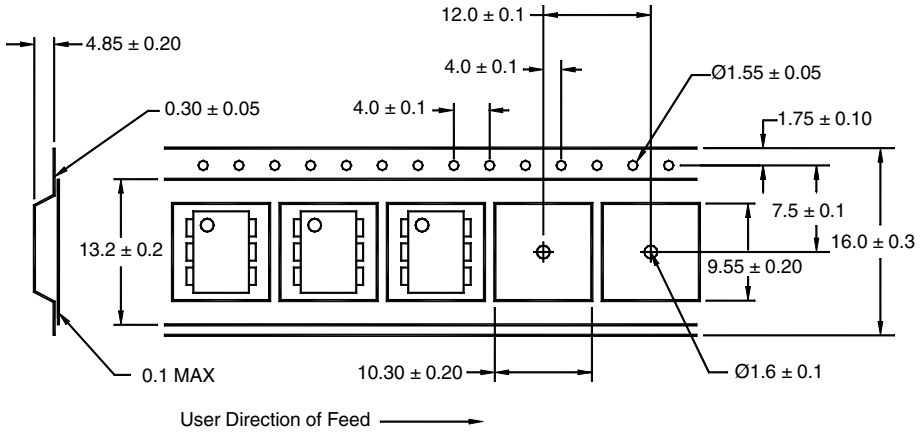

NOTE

All dimensions are in millimeters

Call QT Optoelectronics for more information or the phone number of your nearest distributor.

United States 800-533-6786 • France 33 [0] 1.45.18.78.78 • Germany 49 [0] 89/96.30.51 • United Kingdom 44 [0] 1296 394499 • Asia/Pacific 603-7248793

www.qtopto.com

FAIRCHILD
SEMICONDUCTOR™

GENERAL PURPOSE 6-PIN PHOTODARLINGTON OPTOCOUPLERS

DISCLAIMER

FAIRCHILD SEMICONDUCTOR RESERVES THE RIGHT TO MAKE CHANGES WITHOUT FURTHER NOTICE TO ANY PRODUCTS HEREIN TO IMPROVE RELIABILITY, FUNCTION OR DESIGN. FAIRCHILD DOES NOT ASSUME ANY LIABILITY ARISING OUT OF THE APPLICATION OR USE OF ANY PRODUCT OR CIRCUIT DESCRIBED HEREIN; NEITHER DOES IT CONVEY ANY LICENSE UNDER ITS PATENT RIGHTS, NOR THE RIGHTS OF OTHERS.

LIFE SUPPORT POLICY

FAIRCHILD'S PRODUCTS ARE NOT AUTHORIZED FOR USE AS CRITICAL COMPONENTS IN LIFE SUPPORT DEVICES OR SYSTEMS WITHOUT THE EXPRESS WRITTEN APPROVAL OF THE PRESIDENT OF FAIRCHILD SEMICONDUCTOR CORPORATION. As used herein:

1. Life support devices or systems are devices or systems which, (a) are intended for surgical implant into the body, or (b) support or sustain life, and (c) whose failure to perform when properly used in accordance with instructions for use provided in the labeling, can be reasonably expected to result in a significant injury of the user.
2. A critical component in any component of a life support device or system whose failure to perform can be reasonably expected to cause the failure of the life support device or system, or to affect its safety or effectiveness.

© 2000 Fairchild Semiconductor Corporation

ENTEGRECİ

Bu belge www.entegreci.com üzerinden sunulmaktadır.

Elektronik komponent tedarikinde Entegreci

Entegreci, Eskişehir merkezli, Türkiye geneline satış yapan bir elektronik komponent mağazasıdır. Entegreler (IC), mikrodenetleyiciler, transistörler, diyotlar, pasif elemanlar, konnektörler, modüller ve geliştirme kartları tek adetten seri üretim adetlerine kadar satılır. Ürün sayfalarında güncel stok durumunu, fiyatı ve datasheet bağlantısını bulabilirsiniz.

Parça koduyla arama

Üretici parça numarasını yazın; stok ve fiyatı hemen görün.

www.entegreci.com

Ürün kategorileri

Entegreden kapasitöre tüm elektronik komponent kategorileri.

Kategorilere göz atın

Üreticiler

Aradığınız üreticinin ürünlerini tek sayfada inceleyin.

Üreticileri görün

Toplu alım ve teklif

Listede olmayan ya da yüksek adetli parçalar için teklif isteyin.

Teklif isteyin

www.entegreci.com | **destek@entegreci.com** | **0850 305 90 34**

Entegreci is an online electronic components store based in Türkiye. Search by manufacturer part number to see stock, prices and datasheets for integrated circuits, microcontrollers, transistors, passive components and connectors, or request a quote for parts that are not listed.

Bu sayfa Entegreci tarafından eklenmiştir. Belgenin önceki sayfaları asıl yayıncısına aittir ve içeriği değiştirilmemiştir; en güncel sürüm için belgenin yayıncısına başvurun.