National Semiconductor

February 1995

MM5369 17 Stage Oscillator/Divider

General Description

The MM5369 is a CMOS integrated circuit with 17 binary divider stages that can be used to generate a precise reference from commonly available high frequency quartz crystals. An internal pulse is generated by mask programming the combinations of stages 1 through 4, 16 and 17 to set or reset the individual stages. The MM5369 is advanced one count on the positive transition of each clock pulse. Two buffered outputs are available: the cyrstal frequency for tuning purposes and the 17th stage output. The MM5369 is available in an 8-lead dual-in-line epoxy package.

Features

- Crystal oscillator
- Two buffered outputs
  - Output 1 crystal frequency
  - Output 2 full division
- High speed (4 MHz at V_{DD} = 10V)
- Wide supply range 3V–15V
- Low power
- Fully static operation
- 8-lead dual-in-line package
- Low Current

Option

- MM5369AA — 3.58 MHz to 60 Hz

Connection and Block Diagrams

Dual-In-Line Package

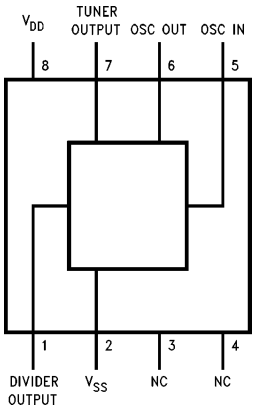

TL/F/10820–1

Top View

Order Number MM5369AA/N
See NS Package Number N08E

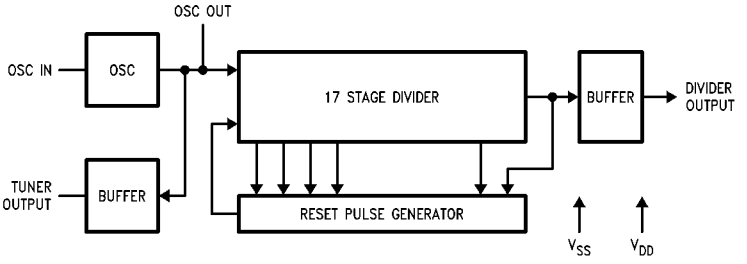

TL/F/10820–2

FIGURE 2

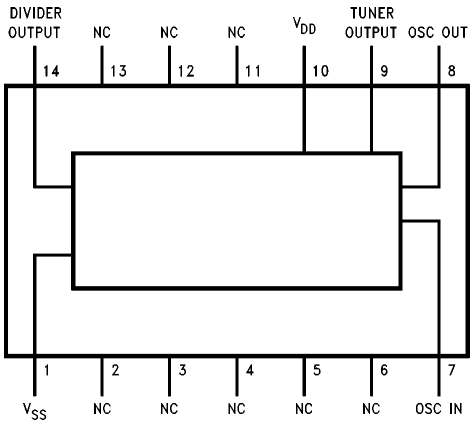

TL/F/10820–8

Order Number MM5369AA/M
See NS Package Number M14A

©1996 National Semiconductor Corporation

RRD-B30M66/Printed in U. S. A.

Absolute Maximum Ratings

If Military/Aerospace specified devices are required, please contact the National Semiconductor Sales Office/Distributors for availability and specifications.

Voltage at Any Pin	$-0.3V$ to $V_{DD} + 0.3V$
Operating Temperature	0°C to +70°C
Storage Temperature	−65°C to +150°C
Package Dissipation	500 mW
Maximum V_{CC} Voltage	16V
Operating V_{CC} Range	3V to 15V
Lead Temperature (Soldering, 10 seconds)	300°C

Electrical Characteristics

T_A within operating temperature range, V_{SS} = GND, $3V \leq V_{DD} \leq 15V$ unless otherwise specified.

Parameter	Conditions	Min	Typ	Max	Units
Quiescent Current Drain	$V_{DD} = 15V$			10	μA
Operating Current Drain	$V_{DD} = 10V$, $f_{IN} = 4.19$ MHz		1.2	2.5	mA
Frequency of Oscillation	$V_{DD} = 10V$	DC		4.5	MHz
	$V_{DD} = 6V$	DC		2	MHz
Output Current Levels	$V_{DD} = 10V$ $V_O = 5V$				
Logical "1" Source		500			μA
Logical "0" Sink		500			μA
Output Voltage Levels	$V_{DD} = 10V$ $I_O = 10\ \mu A$				
Logical "1"		9.0			V
Logical "0"				1.0	V

Note: For 3.58 MHz operation, V_{DD} must be ≥ 10V.

Functional Description

A connection diagram for the MM5369 is shown in *Figure 1* and a block diagram is shown in *Figure 2.*

TIME BASE

A precision time base is provided by the interconnection of a 3,579,545 Hz quartz crystal and the RC network shown in *Figure 3* together with the CMOS inverter/amplifier provided between the OSC IN and the OSC OUT terminals. Resistor R1 is necessary to bias the inverter for class A amplifier operation. Capacitors C1 and C2 in series provide the parallel load capacitance required for precise tuning of the quartz crystal.

The network shown provides > 100 ppm tuning range when used with standard crystals trimmed for $C_L = 12$ pF. Tuning to better than ±2 ppm is easily obtainable.

DIVIDER

A pulse is genertaed when divider stages 1 through 4, 16 and 17 are in the correct state. By mask options, this pulse is used to set or reset individual stages of the counter. *Figure 4* shows the relationship between the duty cycle and the programmed modulus.

OUTPUTS

The Tuner Output is a buffered output at the crystal oscillator frequency. This output is provided so that the crystal frequency can be obtained without disturbing the crystal oscillator. The Divide Output is the input frequency divided by the mask programmed number. Both outputs are push-pull outputs.

Functional Description (Continued)

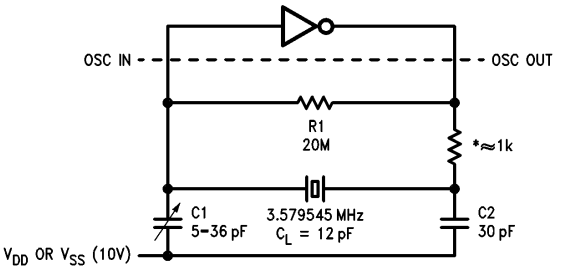

TL/F/10820–3

*To be selected based on xtal used

FIGURE 3. Crystal Oscillator Network

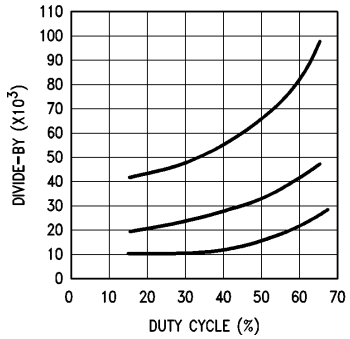

TL/F/10820–4

FIGURE 4. Plot of Divide-By vs Duty Cycle

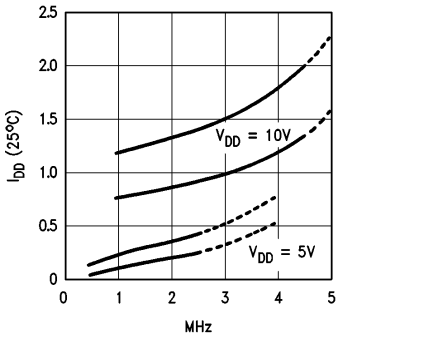

TL/F/10820–5

FIGURE 5. Typical Current Drain vs Oscillator Frequency

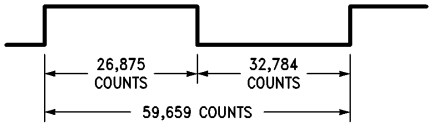

TL/F/10820–6

FIGURE 6. Output Waveform for the MM5369AA

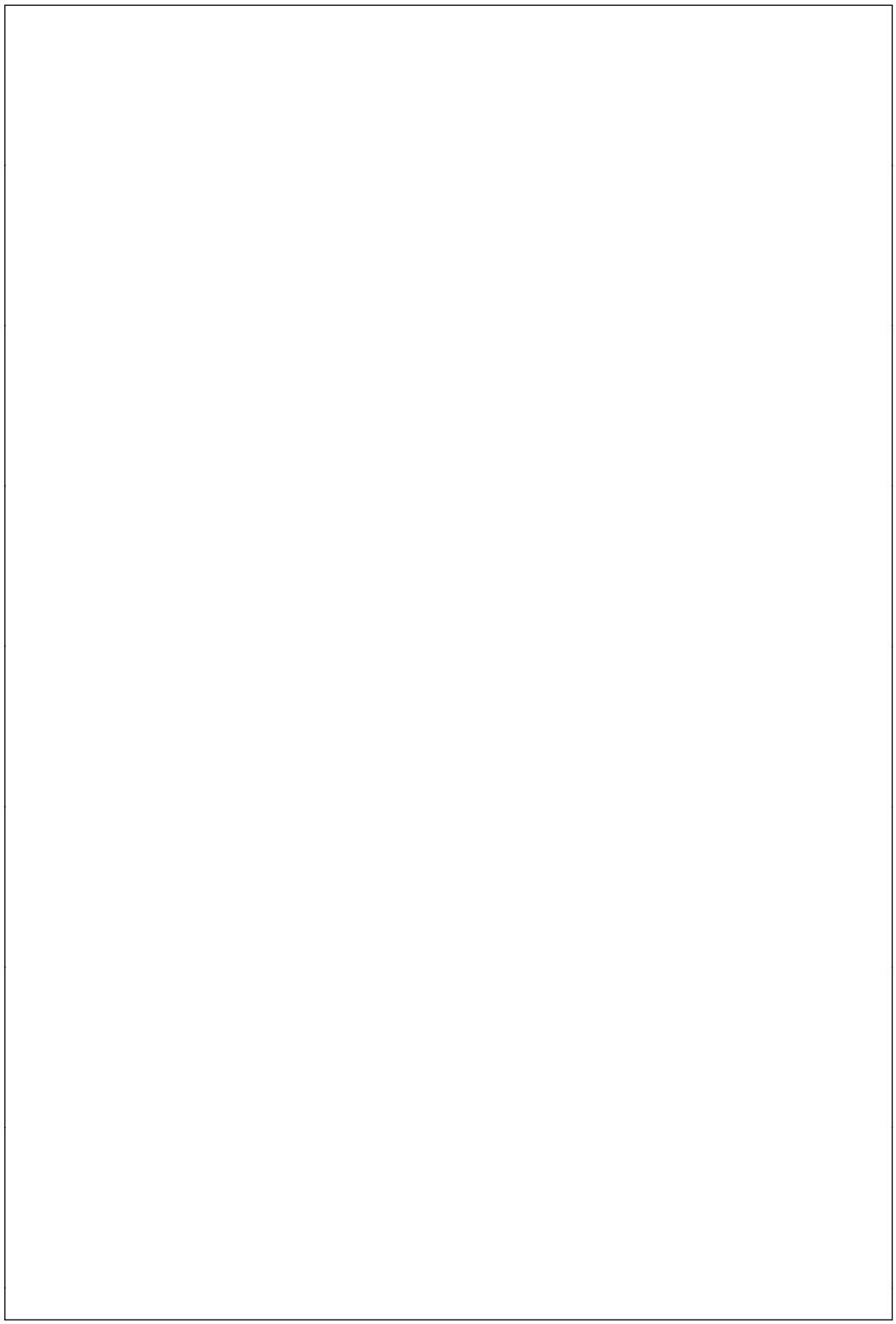

Physical Dimensions inches (millimeters) unless otherwise noted

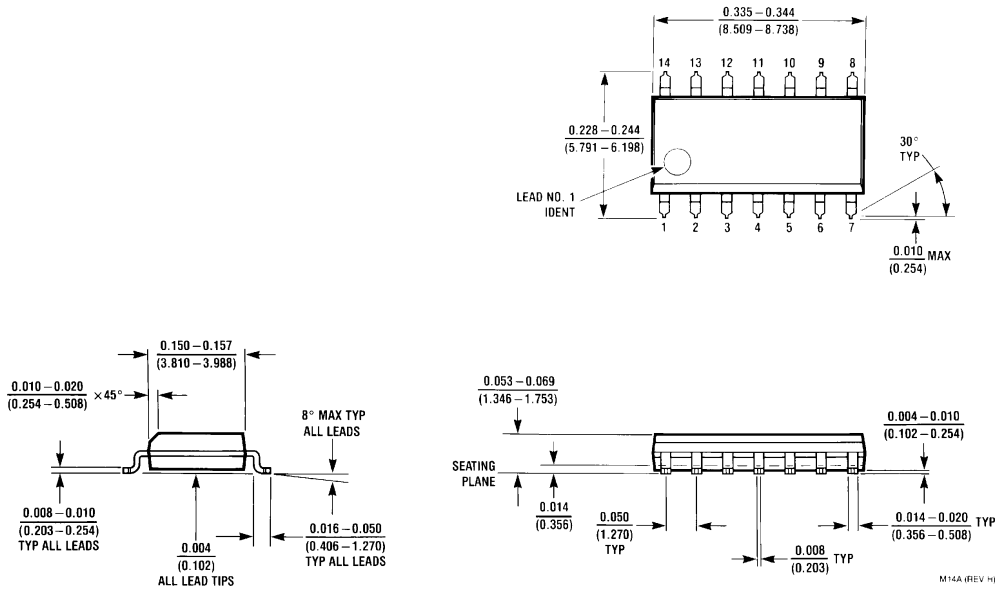

14-Lead (0.150″ Wide) Molded Small Outline Package (M)
Order Number MM5369AA/M
NS Package Number M14A

Physical Dimensions inches (millimeters) unless otherwise noted (Continued)

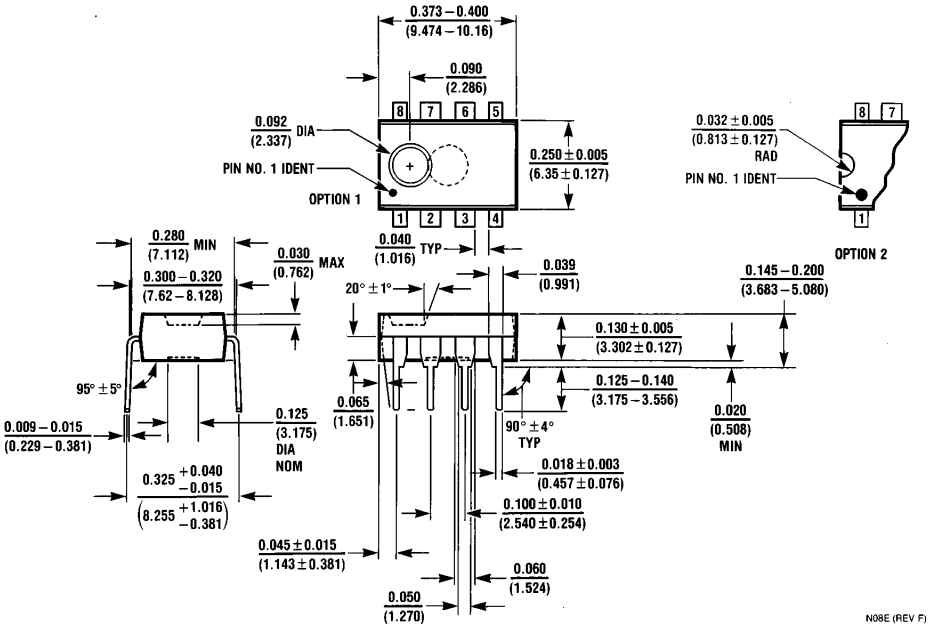

8-Lead Molded Dual-In-Line Package (N)
Order Number MM5369N
NS Package Number N08E

LIFE SUPPORT POLICY

NATIONAL'S PRODUCTS ARE NOT AUTHORIZED FOR USE AS CRITICAL COMPONENTS IN LIFE SUPPORT DEVICES OR SYSTEMS WITHOUT THE EXPRESS WRITTEN APPROVAL OF THE PRESIDENT OF NATIONAL SEMICONDUCTOR CORPORATION. As used herein:

1. Life support devices or systems are devices or systems which, (a) are intended for surgical implant into the body, or (b) support or sustain life, and whose failure to perform, when properly used in accordance with instructions for use provided in the labeling, can be reasonably expected to result in a significant injury to the user.
2. A critical component is any component of a life support device or system whose failure to perform can be reasonably expected to cause the failure of the life support device or system, or to affect its safety or effectiveness.

National Semiconductor Corporation
1111 West Bardin Road
Arlington, TX 76017
Tel: 1(800) 272-9959
Fax: 1(800) 737-7018

http://www.national.com

National Semiconductor Europe
Fax: +49 (0) 180-530 85 86
Email: europe.support@nsc.com
Deutsch Tel: +49 (0) 180-530 85 85
English Tel: +49 (0) 180-532 78 32
Français Tel: +49 (0) 180-532 93 58
Italiano Tel: +49 (0) 180-534 16 80

National Semiconductor Hong Kong Ltd.
13th Floor, Straight Block,
Ocean Centre, 5 Canton Rd.
Tsimshatsui, Kowloon
Hong Kong
Tel: (852) 2737-1600
Fax: (852) 2736-9960

National Semiconductor Japan Ltd.
Tel: 81-043-299-2308
Fax: 81-043-299-2408

National does not assume any responsibility for use of any circuitry described, no circuit patent licenses are implied and National reserves the right at any time without notice to change said circuitry and specifications.

This datasheet has been downloaded from:

www.DatasheetCatalog.com

Datasheets for electronic components.

National Semiconductor was acquired by Texas Instruments.

http://www.ti.com/corp/docs/investor_relations/pr_09_23_2011_national_semiconductor.html

This file is the datasheet for the following electronic components:

MM5369AA/N - http://www.ti.com/product/mm5369aa/n?HQS=TI-null-null-dscatalog-df-pf-null-wwe

MM5369AA/M - http://www.ti.com/product/mm5369aa/m?HQS=TI-null-null-dscatalog-df-pf-null-wwe

ENTEGRECİ

Bu belge www.entegreci.com üzerinden sunulmaktadır.

Elektronik komponent tedarikinde Entegreci

Entegreci, Eskişehir merkezli, Türkiye geneline satış yapan bir elektronik komponent mağazasıdır. Entegreler (IC), mikrodenetleyiciler, transistörler, diyotlar, pasif elemanlar, konnektörler, modüller ve geliştirme kartları tek adetten seri üretim adetlerine kadar satılır. Ürün sayfalarında güncel stok durumunu, fiyatı ve datasheet bağlantısını bulabilirsiniz.

Parça koduyla arama

Üretici parça numarasını yazın; stok ve fiyatı hemen görün.

www.entegreci.com

Ürün kategorileri

Entegreden kapasitöre tüm elektronik komponent kategorileri.

Kategorilere göz atın

Üreticiler

Aradığınız üreticinin ürünlerini tek sayfada inceleyin.

Üreticileri görün

Toplu alım ve teklif

Listede olmayan ya da yüksek adetli parçalar için teklif isteyin.

Teklif isteyin

www.entegreci.com | **destek@entegreci.com** | **0850 305 90 34**

Entegreci is an online electronic components store based in Türkiye. Search by manufacturer part number to see stock, prices and datasheets for integrated circuits, microcontrollers, transistors, passive components and connectors, or request a quote for parts that are not listed.

Bu sayfa Entegreci tarafından eklenmiştir. Belgenin önceki sayfaları asıl yayıncısına aittir ve içeriği değiştirilmemiştir; en güncel sürüm için belgenin yayıncısına başvurun.